NO.	DATE	REVISION

STATE	PROJECT DESIGNATION	YEAR	SHEET NO.	TOTAL SHEETS
ALASKA	0750015/NFHWY00128	2020	A1	61
CDS ROUTE:1120000X000	MILEPOINT: 24.530 TO 24.867			

STATE OF ALASKA
DEPARTMENT OF TRANSPORTATION
&
PUBLIC FACILITIES

PROPOSED HIGHWAY PROJECT

0750015/NFHWY00128

DENALI HIGHWAY MP 25 ROCK CREEK BRIDGE REPLACEMENT

RECONSTRUCTION, BRIDGE WORK, ROADSIDE HARDWARE, DRAINAGE IMPROVEMENTS

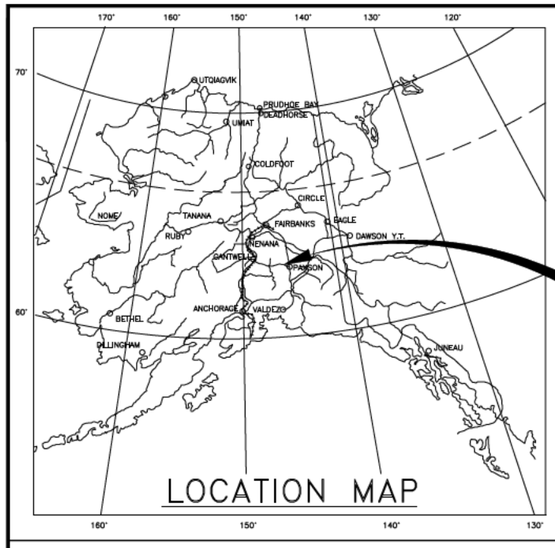

LOCATION MAP

PROJECT LOCATION

INDEX OF SHEETS

SHEET NO.	DESCRIPTION
A1	TITLE SHEET
A2	LEGEND & SHEET LAYOUT INDEX
A3	SURVEY CONTROL SHEET
B1–B2	TYPICAL SECTIONS
C1	ESTIMATE OF QUANTITIES & GENERAL NOTES
D1	SUMMARY
E1–E2	CULVERT DETAILS AND SUMMARY
E3–E4	APPROACH/GUARDRAIL DETAILS & SUMMARY
F1–F3	PLAN & PROFILE
G1–G2	GRADING PLAN
H1	SIGNING DETAILS
N1–N16	BRIDGE PLANS
Q1–Q2	EROSION SEDIMENT CONTROL PLANS
T1–T2	TRAFFIC CONTROL
V1–V24	STANDARD PLANS

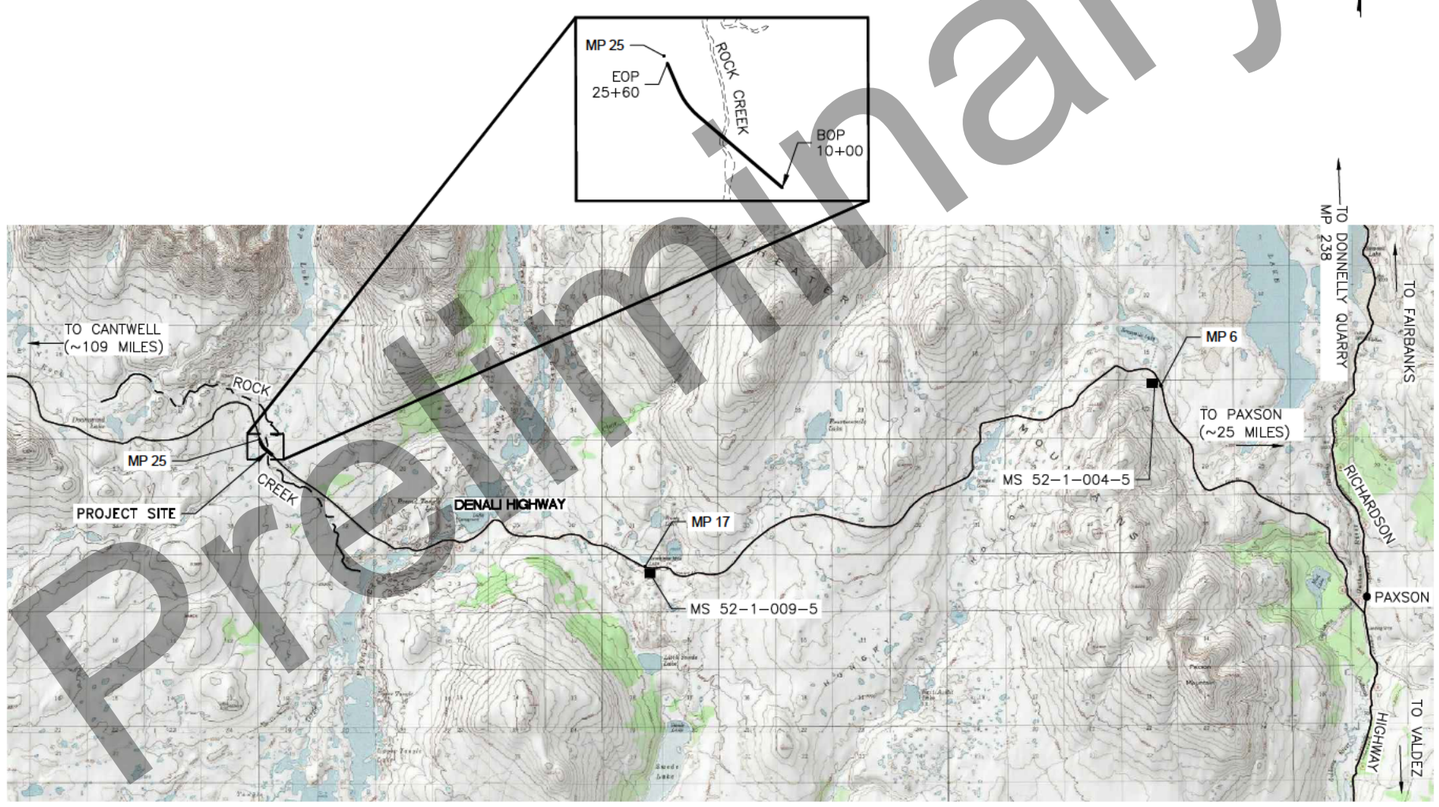

VICINITY MAP

DESIGN DESIGNATIONS

ADT (2017)	100
ADT (2035)	110
DHV (17.80%)	25
PERCENT TRUCKS (T)	14.4%
DIRECTIONAL SPLIT (D)	40 / 60
DESIGN SPEED (V)	50 MPH
DESIGN ESAL'S (2035)	35,201

PROJECT SUMMARY

WIDTH OF SURFACE	30 FT
LENGTH OF GRADING	1560 LF
LENGTH OF PROJECT	1560 LF

GUANGYAN GRIFFIN, P.E., PROJECT MANAGER
LINDSEY KROMREY, DESIGNER

STATE OF ALASKA
DEPARTMENT OF TRANSPORTATION
&
PUBLIC FACILITIES

APPROVED BY:

_____ DATE _____

Sarah E. Schacher, P.E.
Preconstruction Engineer, Northern Region

ACCEPTED FOR CONSTRUCTION:

_____ DATE _____

Ryan F. Anderson, P.E.
Regional Director, Northern Region

Preliminary Plans

R:\Projects\Denali_Hwy\00128_Rock_Creek_Brdg\6 Design\4 CAD\1 Plots\00128_Title-A1 Thu, Sep/03/20 03:22pm

NO.	DATE	REVISION

STATE	PROJECT DESIGNATION	YEAR	SHEET NO.	TOTAL SHEETS
ALASKA	0750015/NFHWY00128	2020	A2	A3

	RECOVERED	SET
BLM MONUMENT		
GLO MONUMENT		
USC&GS MONUMENT		
PRIMARY MONUMENT		
CENTERLINE MONUMENT IN CASING		
PRIMARY R.O.W. MONUMENT		
BEARING OBJECT		
MISCELLANEOUS MONUMENT		
LINE OF SIGHT MONUMENT		
CONCRETE R.O.W. MONUMENT		
BENCHMARK		BM
REBAR AND CAP		
REBAR		
IRON PIPE		
PK NAIL		
SPIKE		
HUB AND TACK		
CONSTRUCTION CENTERLINE	5+00	
MISCELLANEOUS CENTERLINE	10+00	
STATION EQUATION	"L"48+97.23 POT BK= "O"48+97.23 PC AHD	
PROJECT RIGHT-OF-WAY LINE	R/W	
EXISTING RIGHT-OF-WAY LINE		
EXISTING PROPERTY LINE		
CONTROLLED ACCESS LINE	C/A	
UTILITY EASEMENT LINE	PUE	
TEMPORARY EASEMENT LINE (TCP OR TCE)	TCP	
ACCESS OR SECTION LINE EASEMENT	ACCESS EASEMENT	
PROPOSED CUT SLOPE LIMIT		
PROPOSED FILL SLOPE LIMIT		
SECTION LINE		
1/4 SECTION LINE		
1/16 SECTION LINE		
TOWNSHIP & RANGE LINE	T. 2 N. / T. 1 N. — T. 1 E. / T. 2 E.	

	EXISTING	PROPOSED
SANITARY SEWER (FLOW DIRECTION →)	SS	SS
FUEL LINE	O	O
GAS LINE	G	G
WATER LINE	W	W
METER, VALVE, FIRE HYDRANT	W	W
EXISTING STORM DRAIN (FLOW DIRECTION →)	SD	
PROPOSED STORM DRAIN		S-10, S-11, P-11, P-10, MH
FIBER OPTIC LINE	FO	
DIRECT BURIAL TELEPHONE CABLE	T	T
DIRECT BURIAL ELECTRIC CABLE	E	E
ELECTRIC LINE (OVERHEAD)		
POWER POLE LINE		
JOINT USE POWER & TELEPHONE		
TELEPHONE POLE LINE		
POLE ANCHOR		
STUB POLE (POWER OR TELEPHONE)		
TELEPHONE DUCT	T	T
TELEPHONE PEDESTAL		
BURIED CABLE MARKER		
PIPELINE MARKER OR VALVE		
CATCH BASIN OR DROP INLET		
MANHOLE	MH	MH
SANITARY SEWER CLEAN OUT		

	EXISTING	PROPOSED
ROADWAY/PAVEMENT EDGE		
FENCE	X X X X	X X X X
CURB AND GUTTER		
DETECTABLE WARNINGS		
GUARDRAIL		
CULVERT PIPE		
SIGN		
MAILBOX	MB	MB
RAILROAD TRACKS		
RAILROAD DEVICES	CROSS-BUCK, FLASHING LIGHT	CANTILEVER, SWITCH
TREE LINE		
WATER BOUNDARY		
ORDINARY HIGH WATER LINE		
FLOW CENTERLINE		
FLOW DIRECTION		
WETLANDS		
EXISTING BUILDINGS	H	H = HOUSE G = GARAGE M = MERCHANT/STORE B = BARN S = SHED P = PRIVY SS = SERVICE STATION W = WAREHOUSE
POST OR BOLLARD		
WELL OR MONITORING WELL	W, MW	
SEPTIC PIPE	S	
FUEL TANK FILL PIPE/VENT	F	
SATELLITE DISH	SAT. DISH	
TEST HOLE	TH	
CONIFER TREE		
DECIDUOUS TREE		
GRAVE		
THERMOSIPHON		
PARKING METER		
VEHICLE PLUG-IN		
DELINEATOR/GUIDE MARKER		

ABBREVIATIONS:

ADT	AVERAGE DAILY TRAFFIC
APPROX	APPROXIMATLY
BMP	BEST MANAGEMENT PRACTICE
BOP	BEGINNING OF PROJECT
CGP	CONSTRUCTION GENERAL PERMIT
℄	CENTERLINE
CSP	CORRUGATED STEEL PIPE
CY	CUBIC YARD
DHV	DESIGN HOURLY VOLUME
E	EAST, EASTING
ELE, ELEV	ELEVATION
EOP	END OF PROJECT
FT. '	FOOT, FEET
H	HORIZONTAL
HW/D	HEADWATER TO DIAMETER RATIO
IE	INVERT ELEVATION
IN, "	INCH, INCHES
L	LENGTH OF CURVE
L.C.L	LEFT OF CENTERLINE
LHF	LEFT HAND FORWARD
LT	LEFT
LVC	LENGTH OF VERTICAL CURVE
MAX	MAXIMUM
MIN	MINIMUM
N	NORTH, NORTHING
NO.	NUMBER
NPS	NOMINAL PIPE SIZE
NTS	NOT TO SCALE
O.C.	ON CENTER
OG	ORIGINAL GROUND
%	PERCENT
PC	POINT OF CURVATURE
PI	POINT OF INTERSECTION
POT	POINT ON TANGENT
PST	PERFORATED STEEL TUBE
PT	POINT OF TANGENCY
PVI	POINT OF VERTICAL INTERSECTION
R	RADIUS
R.C.L	RIGHT OF CENTERLINE
RHF	RIGHT HAND FORWARD
ROW	RIGHT OF WAY
RT	RIGHT
S	SOUTH
SQ. FT.	SQUARE FOOT
SWPPP	STORM WATER POLLUTION PREVENTION PLAN
SY	SQUARE YARD
STA	STATION
T	TANGENT
TCE	TEMPORARY CONSTRUCTION EASEMENT
TCP	TEMPORARY CONSTRUCTION PERMIT
TS	TUBE STEEL
TYP	TYPICAL
V	VERTICAL
VPC	VERTICAL POINT OF CURVATURE
VPI	VERTICAL POINT OF INTERSECTION
VPT	VERTICAL POINT OF TANGENCY
W	WEST
WWR	WELDED WIRE REINFORCEMENT
Ø	DIAMETER

LEGEND & ABBREVIATIONS

STATE OF ALASKA 49TH GUANGYAN TU GRIFFIN CE 11229 REGISTERED PROFESSIONAL ENGINEER

Preliminary Plans

PLANS DEVELOPED BY: STATE OF ALASKA DEPARTMENT OF TRANSPORTATION & PUBLIC FACILITIES, NORTHERN REGION, 2301 PEGER ROAD, FAIRBANKS, AK 99709 (907)451-2200
R:\Projects\Denali_Hwy\00128_Rock_Creek_Brdg\6 Design\4 CAD\1 Plots\00128_Title-HWYS Legend Thu, Sep/03/20 03:22pm

NO.	DATE	REVISION

STATE	PROJECT DESIGNATION	YEAR	SHEET NO.	TOTAL SHEETS
ALASKA	0750015/NFHWY00128	2020	A3	A3

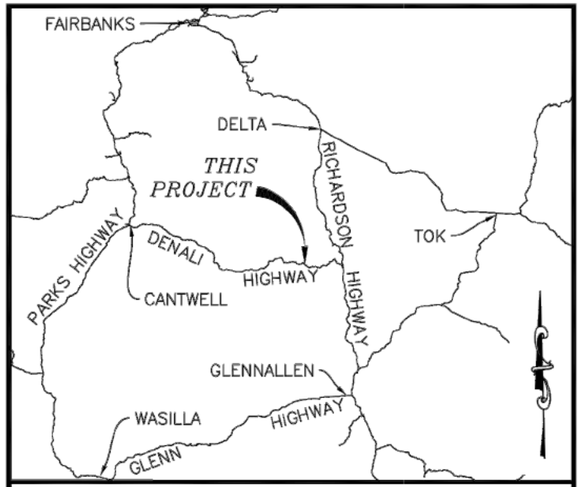

VICINITY MAP SCALE: 1" = 200,000 FEET

DENALI HIGHWAY

"O" LINE GEOMETRY POINTS

POINT NO.	NORTHING	EASTING	DESCRIPTION
2000	45460.60	524733.90	"O" 5+00.00 BP
2001	46410.75	523619.24	"O" 19+64.66 PC
2002	46763.45	523360.07	"O" 24+06.28 PT
2003	47103.03	523215.51	"O"27+75.34 EP

CONTROL MONUMENTS

POINT NO.	NORTHING	EASTING	ELEVATION	LATITUDE	LONGITUDE	DESCRIPTION
1	45399.94	524896.93	3129.60	N63° 04' 04.3473"	W146° 06' 04.2535"	PRIM MON SET CP1 PLS14471 2017
2	47155.92	523276.00	3169.52	N63° 04' 22.3972"	W146° 06' 37.5110"	PRIM MON SET CP2 PLS14471 2017
3	46213.31	523961.81	3107.28	N63° 04' 12.7977"	W146° 06' 23.6521"	REBAR CAP SET CP3 PLS14471 2017
4	46090.46	523906.40	3106.71	N63° 04' 11.6169"	W146° 06' 24.9847"	REBAR CAP SET CP4 PLS14471
330	47075.33	523207.10	3162.54	N63° 04' 21.6383"	W146° 06' 39.0908"	SPIKE SET PHOTO
331	47053.38	523281.23	3161.16	N63° 04' 21.3866"	W146° 06' 37.5073"	SPIKE SET PHOTO
332	46758.10	523205.38	3149.85	N63° 04' 18.5204"	W146° 06' 39.4672"	SPIKE SET PHOTO
333	46508.16	523342.03	3133.08	N63° 04' 15.9970"	W146° 06' 36.7720"	SPIKE SET PHOTO
334	46075.46	523994.18	3114.58	N63° 04' 11.4267"	W146° 06' 23.0981"	SPIKE SET PHOTO
335	45947.87	524190.03	3113.68	N63° 04' 10.0774"	W146° 06' 18.9892"	SPIKE SET PHOTO
336	45311.12	524876.45	3126.50	N63° 04' 03.4841"	W146° 06' 04.7925"	SPIKE SET PHOTO
337	45347.49	524906.01	3125.67	N63° 04' 03.8272"	W146° 06' 04.1130"	SPIKE SET PHOTO
1000	43723.30	527025.80	3087.87	N63° 03' 46.8274"	W146° 05' 19.9144"	REBAR CAP FND PC9 75 RT
1001	43587.78	526962.05	3082.00	N63° 03' 45.5263"	W146° 05' 21.4418"	REBAR CAP FND PC9 75 LT
1002	46433.08	523713.61	3120.34	N63° 04' 15.0787"	W146° 06' 28.7974"	REBAR CAP FND PC10 75 RT
1003	46311.74	523609.62	3124.69	N63° 04' 13.9362"	W146° 06' 31.1814"	REBAR CAP FND PC10 85 LT
1004	50480.36	521663.17	3186.86	N63° 04' 55.8608"	W146° 07' 08.9323"	REBAR CAP FND PT11 75 RT
1005	50343.49	521601.48	3182.30	N63° 04' 54.5450"	W146° 07' 10.4162"	REBAR CAP FND PT11 75 LT

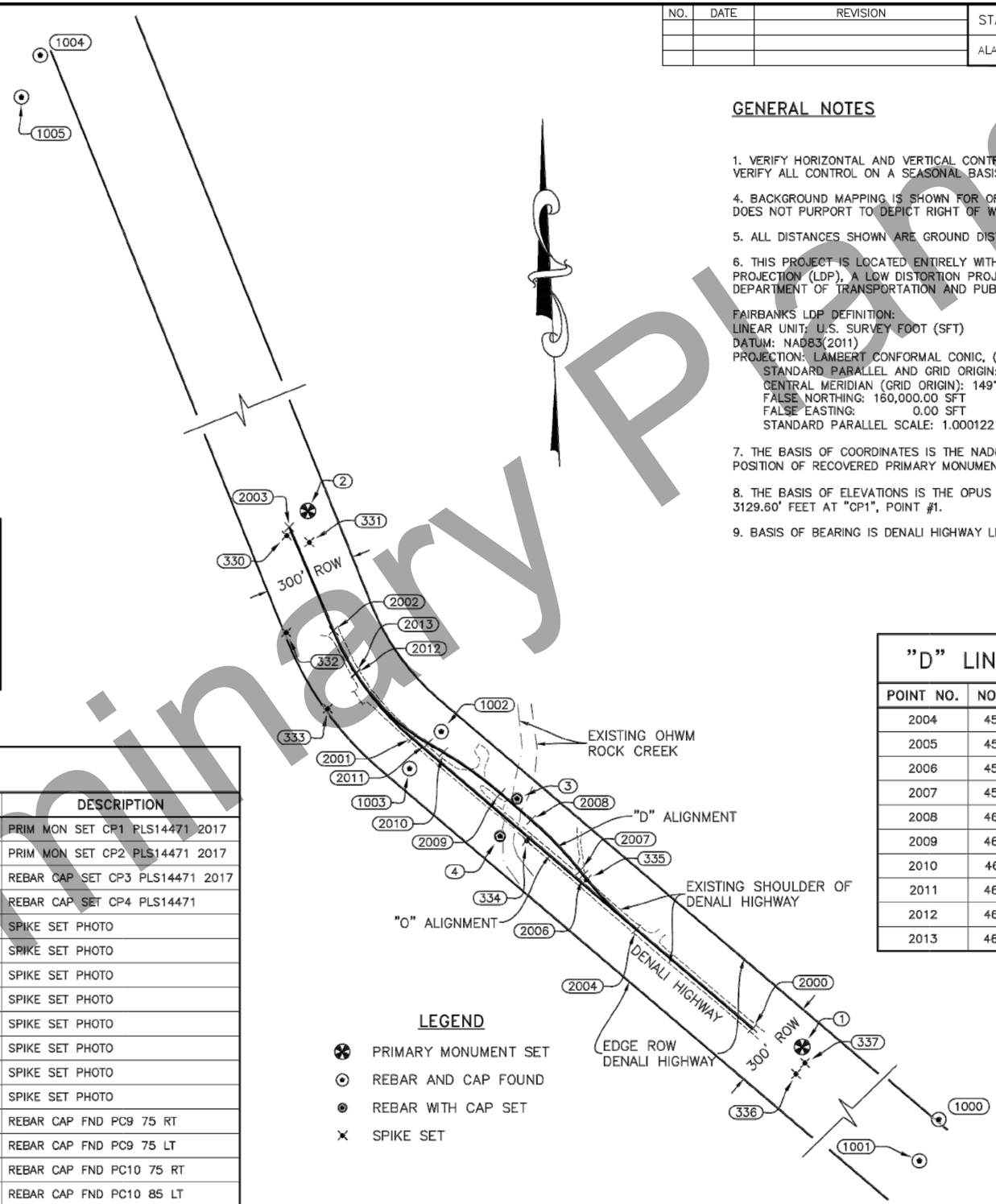

LEGEND

- PRIMARY MONUMENT SET
- REBAR AND CAP FOUND
- REBAR WITH CAP SET
- SPIKE SET

GRAPHIC SCALE

0 200 400 600 800 1000

SCALE 1"=200'

GENERAL NOTES

1. VERIFY HORIZONTAL AND VERTICAL CONTROL PRIOR TO USE. ON MULTI YEAR PROJECTS, VERIFY ALL CONTROL ON A SEASONAL BASIS.

4. BACKGROUND MAPPING IS SHOWN FOR ORIENTATION PURPOSES ONLY. THIS SHEET DOES NOT PURPORT TO DEPICT RIGHT OF WAY.

5. ALL DISTANCES SHOWN ARE GROUND DISTANCES, IN U.S. SURVEY FEET.

6. THIS PROJECT IS LOCATED ENTIRELY WITHIN THE DENALI HIGHWAY LOW DISTORTION PROJECTION (LDP), A LOW DISTORTION PROJECTION CREATED BY THE ALASKA DEPARTMENT OF TRANSPORTATION AND PUBLIC FACILITIES.

FAIRBANKS LDP DEFINITION:
LINEAR UNIT: U.S. SURVEY FOOT (SFT)
DATUM: NAD83(2011)
PROJECTION: LAMBERT CONFORMAL CONIC, (SINGLE PARALLEL)
STANDARD PARALLEL AND GRID ORIGIN: 63°25'00.0"N
CENTRAL MERIDIAN (GRID ORIGIN): 149°16'00.0"W
FALSE NORTHING: 160,000.00 SFT
FALSE EASTING: 0.00 SFT
STANDARD PARALLEL SCALE: 1.000122 (EXACT)

7. THE BASIS OF COORDINATES IS THE NAD83(2011)(EPOCH: 2010.0000) OPUS AVERAGED POSITION OF RECOVERED PRIMARY MONUMENT "CP1", POINT #1.

8. THE BASIS OF ELEVATIONS IS THE OPUS AVERAGED GEOID12A (NAVD88) ELEVATION OF 3129.60' FEET AT "CP1", POINT #1.

9. BASIS OF BEARING IS DENALI HIGHWAY LDP.

"D" LINE GEOMETRY POINTS

POINT NO.	NORTHING	EASTING	DESCRIPTION
2004	45784.96	524353.38	"D" 30+00.00 BP
2005	45790.09	524347.36	"D" 30+07.91 PC
2006	45963.66	524179.42	"D" 32+49+80 PT
2007	45977.23	524168.60	"D" 32+67.16 PC
2008	46143.95	524008.63	"D" 34+98.54 PT
2009	46231.10	523908.10	"D" 36+31.59 PC
2010	46365.81	523720.37	"D" 38+62.97 PT
2011	46395.03	523670.57	"D" 39+20.71 PC
2012	46623.33	523434.01	"D" 42+52.56 PT
2013	46625.34	523432.73	"D" 42+54.94 EP

SURVEY CONTROL PLAN

STATE OF ALASKA 49TH REGISTERED PROFESSIONAL LAND SURVEYOR TROY M. HICKS Sep 03, 2020 LS-14471

Preliminary Plans

PLANS DEVELOPED BY: STATE OF ALASKA DEPARTMENT OF TRANSPORTATION & PUBLIC FACILITIES, NORTHERN REGION, 2301 PEGER ROAD, FAIRBANKS, AK 99709 (907)451-2200
R:\Projects\Denali_Hwy\00128_Rock_Creek_Brdg\6 Design\4 CAD\1 Plans\00128_SV_ControlLayout (2) Thu, Sep/03/20 03:22pm

NO.	DATE	REVISION

STATE	PROJECT DESIGNATION	YEAR	SHEET NO.	TOTAL SHEETS
ALASKA	0750015/NFHWY00128	2020	B1	B2

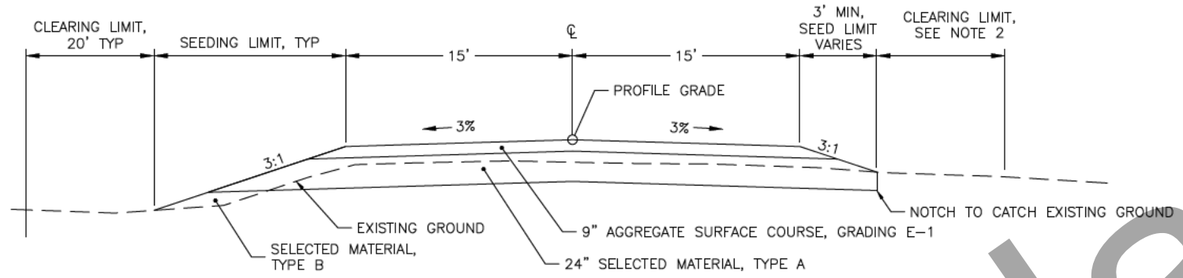

TYPICAL SECTION
"O" (BOP) 10+00 TO 13+21
"O" 17+64 TO 25+60 (EOP)

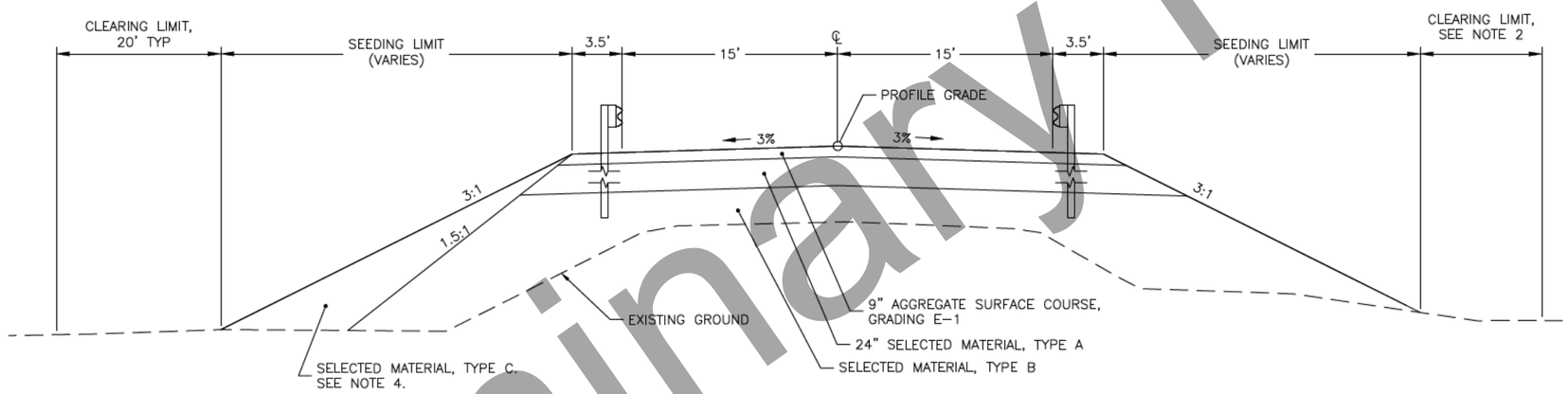

TYPICAL SECTION WITH GUARDRAIL
"O" 13+21 TO 14+80.50
"O" 16+04.50 TO 17+64

NOTES:

1. REFER TO BRIDGE PLAN SHEETS FOR TYPICAL SECTION FROM "O" 14+80.50 TO "O" 16+04.50.
2. CLEARING LIMITS FOR DENALI HIGHWAY AND THE TRAFFIC DIVERSION IS 20' FROM THE TOE OF SLOPE, WHERE APPLICABLE.
3. STOCKPILE ORGANICS AND OVERBURDEN FOR USE AS TOPSOIL ON BORROW SLOPES. REMOVE MATERIALS WITH ANY AXIS GREATER THAN 4". THIS MAY REQUIRE MULTIPLE HANDLINGS. ALL WORK AND MATERIALS REQUIRED TO STOCKPILE AND RE-HANDLE ARE SUBSIDIARY TO PAY ITEM 618.0002.0000 SEEDING. SPREAD MATERIAL EVENLY PRIOR TO PERMANENT SEEDING UNDER SECTION 618. MATERIAL MAY BE STOCKPILED ADJACENT TO THE PROPOSED ROADWAY TOE PROVIDED IT DOES NOT IMPEDE DRAINAGE, IS NOT IN A WETLAND, IS WITHIN THE PROJECT LIMITS, AND IS PROTECTED "O" 10+00 TO "O" 25+60 AND "D" 30+00 TO "D" 42+52 IN ACCORDANCE WITH THE SWPPP.
4. WHEN NEEDED, PLACE UNCLASSIFIED EXCAVATION MATERIAL MEETING SELECTED MATERIAL, TYPE C OUTSIDE 1.5:1 SLOPE LINE AS SHOWN. OBTAIN THE ENGINEER APPROVAL ON THE LOCATION BEFORE PLACEMENT.
5. TAPER ROAD FROM MATCH EXISTING TO DESIGN EMBANKMENT OVER THE FOLLOWING STATION RANGES: "O" 10+00 TO 11+00 & "O" 24+60 TO 25+60.

Preliminary Plans

"O" ALIGNMENT
TYPICAL SECTIONS

STATE OF ALASKA 49TH
GUANGYAN TU GRIFFIN
CE 11229
REGISTERED PROFESSIONAL ENGINEER

PLANS DEVELOPED BY: STATE OF ALASKA DEPARTMENT OF TRANSPORTATION & PUBLIC FACILITIES, NORTHERN REGION, 2301 PEGER ROAD, FAIRBANKS, AK 99709 (907)451-2200
R:\Projects\Denali_Hwy\00128_Rock_Creek_Brg\6 Design\4 CAD\ Plots\00128_B_TYP-B1 Thu, Sep/03/20 03:22pm

NO.	DATE	REVISION

STATE	PROJECT DESIGNATION	YEAR	SHEET NO.	TOTAL SHEETS
ALASKA	0750015/NFHWY00128	2020	B2	B2

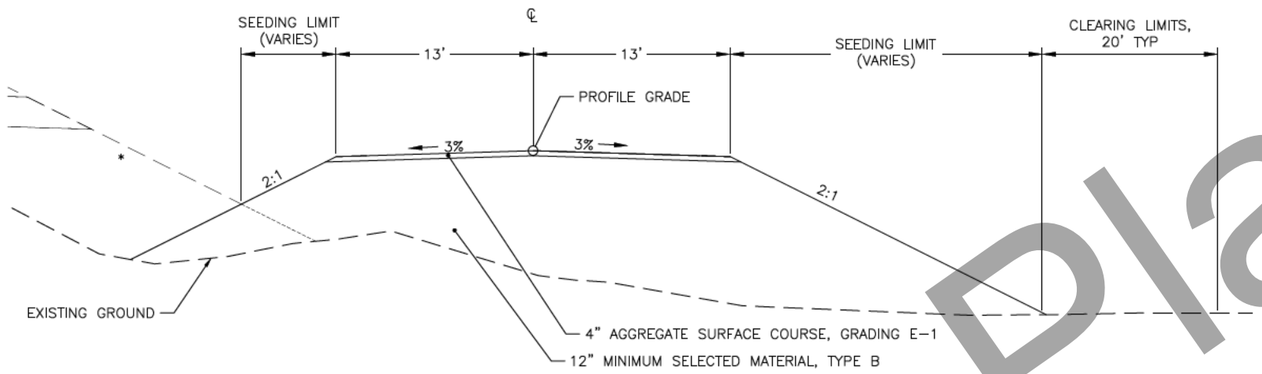

DIVERSION TYPICAL SECTION
* DENALI HWY NOT SHOWN FOR CLARITY

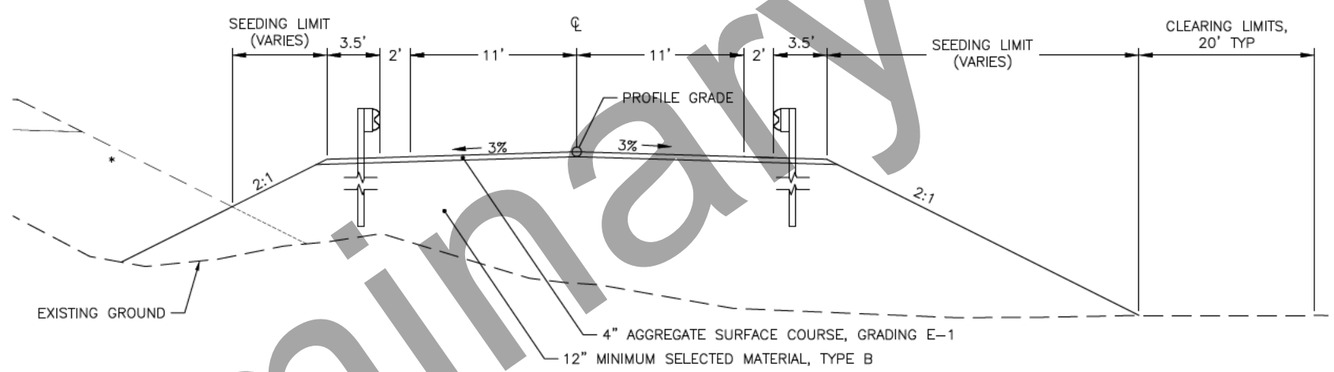

DIVERSION TYPICAL SECTION WITH GUARDRAIL
* DENALI HWY NOT SHOWN FOR CLARITY

DETOUR GUARDRAIL SUMMARY

BEGIN STATION	END STATION	RT/LT	W-BEAM (LF)	PARALLEL TERMINAL (EA)	TRANSITION RAIL (EA)	REMARKS
"O" 33+66	"O" 34+16	RT		1		
"O" 34+16	"O" 34+66	LT		1		
"O" 34+66	"O" 34+91	RT	12.5			
"O" 34+91	"O" 35+04	LT	25			
"O" 35+04	"O" 35+25	RT			1	
"O" 35+04	"O" 35+25	LT			1	
"O" 36+15	"O" 36+36	RT			1	
"O" 36+15	"O" 36+36	LT			1	
"O" 36+36	"O" 36+49	RT	25			
"O" 36+36	"O" 36+61	LT	12.5			
"O" 36+49	"O" 36+99	RT		1		
"O" 36+61	"O" 37+11	LT		1		
		TOTAL	75	4	4	

DIVERSION GUARDRAIL NOTES:

1. DISPOSE OF DIVERSION GUARDRAIL AND END TERMINALS AFTER REMOVAL IS SUBSIDIARY TO 520.001.0000 TEMPORARY CROSSING.

"D" ALIGNMENT
TYPICAL SECTIONS

STATE OF ALASKA 49TH
GUANGYAN TU GRIFFIN
CE 11229
REGISTERED PROFESSIONAL ENGINEER

Preliminary Plans

PLANS DEVELOPED BY: STATE OF ALASKA DEPARTMENT OF TRANSPORTATION & PUBLIC FACILITIES, NORTHERN REGION, 2301 PEGER ROAD, FAIRBANKS, AK 99709 (907)451-2200
R:\Projects\Denali_Hwy\00128_Rock_Creek_Brdg\6 Design\4 CAD\1 Plots\00128_B_TYP-B2 Thu, Sep/03/20 03:22pm

NO.	DATE	REVISION

STATE	PROJECT DESIGNATION	YEAR	SHEET NO.	TOTAL SHEETS
ALASKA	0750015/NFHWY00128	2020	C1	C1

ESTIMATE OF QUANTITIES

ITEM NUMBER	PAY ITEM	PAY UNIT	QUANTITY
201.0003.0000	CLEARING AND GRUBBING	LUMP SUM	ALL REQUIRED
202.0017.0000	REMOVAL OF CULVERT PIPE	EACH	2
202.0023.0000	REMOVAL OF BRIDGE	LUMP SUM	ALL REQUIRED
203.0003.0000	UNCLASSIFIED EXCAVATION	CY	6450
203.0006.0000	BORROW	TON	12500
205.0006.0000	STRUCTURAL FILL	CUBIC YARD	1050
301.0003.00E1	AGGREGATE SURFACE COURSE, GRADING E-1	TON	2600
501.0001.0000	CLASS A CONCRETE	LUMP SUM	ALL REQUIRED
501.0007.0000	PRECAST CONCRETE MEMBER, 122'-2" DECKED BULB-TEE	EACH	5
503.0001.0000	REINFORCING STEEL	LUMP SUM	ALL REQUIRED
503.0002.0000	EPOXY-COATED REINFORCING STEEL	LUMP SUM	ALL REQUIRED
505.0005.1417	FURNISH STRUCTURAL STEEL PILES, HP 14x117	LINEAR FOOT	930
505.0006.1417	DRIVE STRUCTURAL STEEL PILES, HP 14x117	EACH	12
507.0001.0002	STEEL BRIDGE RAILING, 2-TUBE	LINEAR FOOT	328
520.0001.0000	TEMPORARY CROSSINGS	LUMP SUM	ALL REQUIRED
603.0001.0024	CSP 24 INCH	LINEAR FOOT	204
606.0001.0000	W-BEAM GUARDRAIL	LINEAR FOOT	200
606.0013.0000	PARALLEL GUARDRAIL TERMINAL	EACH	4
606.0016.0000	TRANSITION RAIL	EACH	4
611.0001.0001	RIPRAP, CLASS I	CUBIC YARD	540
611.0001.0003	RIPRAP, CLASS III	CUBIC YARD	1570
613.0002.0000	CULVERT MARKER POST	EACH	8
615.0001.0000	STANDARD SIGN	SQUARE FOOT	53
616.0002.0050	THAW PIPE 1/2 INCH DIAMETER	EACH	4
618.0002.0000	SEEDING	POUND	150
639.2000.0000	APPROACH	EACH	5
640.0001.0000	MOBILIZATION AND DEMOBILIZATION	LUMP SUM	ALL REQUIRED
640.0004.0000	WORKER MEALS AND LODGING, OR PER DIEM	LUMP SUM	ALL REQUIRED
641.0001.0000	EROSION, SEDIMENT AND POLLUTION CONTROL ADMINISTRATION	LUMP SUM	ALL REQUIRED
641.0003.0000	TEMPORARY EROSION, SEDIMENT AND POLLUTION CONTROL	LUMP SUM	ALL REQUIRED
641.0004.0000	TEMPORARY EROSION, SEDIMENT AND POLLUTION CONTROL ADDITIVES	CONTINGENT SUM	ALL REQUIRED
641.0006.0000	WITHHOLDING	CONTINGENT SUM	ALL REQUIRED
641.0007.0000	SWPPP MANAGER	LUMP SUM	ALL REQUIRED
642.0001.0000	CONSTRUCTION SURVEYING	LUMP SUM	ALL REQUIRED
642.0003.0000	THREE PERSON SURVEY PARTY	HOUR	50
643.0002.0000	TRAFFIC MAINTENANCE	LUMP SUM	ALL REQUIRED
643.0003.0000	PERMANENT CONSTRUCTION SIGNS	LUMP SUM	ALL REQUIRED
643.0023.0000	TRAFFIC PRICE ADJUSTMENT	CONTINGENT SUM	ALL REQUIRED
643.0025.0000	TRAFFIC CONTROL	CONTINGENT SUM	ALL REQUIRED
644.0001.0000	FIELD OFFICE	LUMP SUM	ALL REQUIRED
644.0002.0000	FIELD LABORATORY	LUMP SUM	ALL REQUIRED
644.0003.0000	CURING SHED	LUMP SUM	ALL REQUIRED
644.0006.0000	VEHICLE	LUMP SUM	ALL REQUIRED
644.0015.0000	NUCLEAR TESTING EQUIPMENT STORAGE SHED	EACH	1.0
644.0016.0000	STORAGE CONTAINER	EACH	1.0
644.2002.0000	FIELD COMMUNICATIONS	CONTINGENT SUM	ALL REQUIRED
646.0001.0000	CPM SCHEDULING	LUMP SUM	ALL REQUIRED

520.0001.0000 TEMPORARY CROSSING SUMMARY ESTIMATE OF QUANTITIES

PAY ITEM	PAY UNIT	QUANTITY
AGGREGATE SURFACE COURSE, E-1	TON	800
BORROW	TON	7200
SEEDING	POUND	100
GUARDRAIL / CONCRETE BARRIER	LINEAR FEET	75
TRANSITION RAIL	EACH	4
PARALLEL GUARDRAIL TERMINALS	EACH	4
TEMPORARY BRIDGE	EACH	1

GENERAL NOTE:

1. THERE IS NO DOT ROAD MAINTENANCE FROM OCTOBER TO MID-MAY NEXT SEASON DEPENDING ON THE WEATHER. THE CONTRACTOR IS RESPONSIBLE FOR ANY NECESSARY MEANS TO REACH THE PROJECT SITE BEFORE M&O RESUMES MAINTENANCE DUTIES. THIS WORK IS SUBSIDIARY TO PAY ITEM 643.0002.0000 TRAFFIC MAINTENANCE.
2. EXISTING ROAD SURFACE IS HIGH FLOAT. HOT MIX ASPHALT PAVEMENT SURFACE STOPS AT APPROXIMATE DENALI HWY MP 20.
3. QUANTITIES SHOWN IN THE ESTIMATE OF QUANTITIES 520.0001.0000 TEMPORARY CROSSING SUMMARY ARE ESTIMATES TO CONSTRUCT AND REMOVE THE TEMPORARY CROSSING OVER ROCK CREEK BRIDGE. THEY ARE FOR ESTIMATION PURPOSES ONLY AND WILL NOT BE USED FOR MEASUREMENT OR PAYMENT.
4. SEED ALL FORESLOPES, BACKSLOPES, "FILLED VOIDS" IN THE RIPRAP (REFER TO BRIDGE PLANS SHEET N4) AND DISTURBED AREAS IN ACCORDANCE WITH SECTION 618.
5. PRESERVE EXISTING PRIMARY AND SECONDARY MONUMENTS TO THE EXTENT PRACTICAL. DESTROY OR ABANDON MONUMENTS IN-PLACE WHICH ARE DISTURBED BY CONSTRUCTION AS APPROVED BY THE ENGINEER. SUBMIT A RECORD OF ALL MONUMENTS FOUND, SET, DESTROYED, OR ABANDONED IN-PLACE DURING CONSTRUCTION ACTIVITIES TO THE ENGINEER. ALL RECORDED MONUMENTS MUST INCLUDE A DESCRIPTION AND REFERENCE TO THE STATION AND OFFSET OF THE PROPOSED "O" ALIGNMENT. THIS WORK WILL NOT BE MEASURED OR PAID FOR DIRECTLY AND IS SUBSIDIARY TO PAY ITEM 642.0001.0000.
6. IF AN EAGLE NEST IS DISCOVERED AT ANY TIME DURING THE PROJECT WITHIN ONE-EIGHTH MILE OF THE PROJECT, THE U.S. FISH AND WILDLIFE SERVICE MUST BE CONTACTED FOR: A) A RECOMMENDATION ON WHETHER THE PROJECT RELATED ACTIVITIES ARE LIKELY TO CAUSE DISTURBANCE TO EAGLES, B) A RECOMMENDATION ON DISTURBANCE-AVOIDING MEASURES, AND C) A RECOMMENDATION ON THE NEED FOR A BALD AND GOLD EAGLE PROTECTION ACT PERMIT.
7. BIRD NESTS ON BRIDGE MUST BE DESTROYED BEFORE PROJECT BEGINS AND BEFORE NESTING SEASON (MAY 1). NETTING MUST BE INSTALLED BEFORE MAY 1 TO PREVENT ATTEMPTS TO RE-NEST UNTIL WORK ON BRIDGE BEGINS.
8. CLEARING OF VEGETATION WILL NEED TO OCCUR PRIOR TO BIRD NESTING SEASON (MAY 1).
9. NO CONSTRUCTION ACTIVITY, MATERIAL OR EQUIPMENT STORAGE ALLOWED WITHIN THE AVOIDANCE AREA (SEE SHEET F2).

MATERIAL SITE NOTES:

1. MATERIAL SITE MP 17 WILL NOT BE EXPANDED AND WILL REQUIRE A PROPERTY SURVEY PRIOR TO USE. PROPERTY SURVEY IS SUBSIDIARY TO 642.0001.0000 CONSTRUCTION SURVEYING.
2. COORDINATE ALL WORK IN MATERIAL SITE MP 17 WITH PAXSON STATION M&O PERSONNEL, AND PERMIT M&O ACCESS TO THE SITE AND STOCKPILES AT ALL TIMES WITH REASONABLE NOTICE.
3. DO NOT DISTURB ANY STOCKPILED MATERIALS WITHOUT PRIOR WRITTEN AUTHORIZATION. USE OF OR RELOCATION OF STOCKPILES WILL REQUIRE BEFORE-AND-AFTER SURVEYS DONE TO ENSURE QUANTITY. CONTRACTOR IS RESPONSIBLE FOR RETURNING THE DIFFERENCE IN MATERIAL QUANTITY BACK TO M&O AT CONTRACTOR'S EXPENSE.
4. NO DISPOSAL OF WASTE OR DEBRIS OF ANY KIND SHALL BE PERMITTED WITHIN THIS SITE.

ESTIMATING FACTORS

ITEM NO.	DESCRIPTION	VALUE
203.0006.0000	BORROW	2 TONS/CY
301.0003.00E1	AGGREGATE SURFACE COURSE, GRADING E-1	2 TONS/CY
618.0002.0000	SEEDING	1 LB/1000 SF

STATE OF ALASKA 49TH QUANGYAN TU GRIFFIN CE 11229 REGISTERED PROFESSIONAL ENGINEER

ESTIMATE OF QUANTITIES & GENERAL NOTES

Preliminary Plans

PLANS DEVELOPED BY: STATE OF ALASKA DEPARTMENT OF TRANSPORTATION & PUBLIC FACILITIES, NORTHERN REGION, 2301 PEGER ROAD, FAIRBANKS, AK 99709 (907)451-2200
R:\Projects\Denali_Hwy\00128_Rock_Creek_Brdg\6 Design\4 CAD\1 Plots\00128_C_EST1-C1 Thu, Sep/03/20 03:22pm

NO.	DATE	REVISION

STATE	PROJECT DESIGNATION	YEAR	SHEET NO.	TOTAL SHEETS
ALASKA	0750015/NFHWY00128	2020	D1	D1

GUARDRAIL SUMMARY

BEGIN STATION	END STATION	RT/LT	606.0001.0000 W-BEAM (LF)	606.0013.0000 PARALLEL TERMINAL (EA)	606.0016.0000 TRANSITION RAIL (EA)	REMARKS
"O" 13+21	"O" 13+71	RT		1		END TERMINAL LENGTH MAY VARY DEPENDING ON PRODUCT APPROVED TO USE ON THE PROJECT.
"O" 13+57	"O" 14+07	LT		1		END TERMINAL LENGTH MAY VARY DEPENDING ON PRODUCT APPROVED TO USE ON THE PROJECT.
"O" 13+71	"O" 14+46	RT	75			
"O" 14+07	"O" 14+32	LT	25			
"O" 14+32	"O" 14+54	LT			1	
"O" 14+46	"O" 14+68	RT			1	
"O" 16+18	"O" 16+39	LT			1	
"O"16+32	"O" 16+53	RT			1	
"O" 16+39	"O" 17+14	LT	75			
"O" 16+53	"O" 16+78	RT	25			
"O" 16+78	"O" 17+28	RT		1		END TERMINAL LENGTH MAY VARY DEPENDING ON PRODUCT APPROVED TO USE ON THE PROJECT.
"O" 17+14	"O" 17+64	LT		1		END TERMINAL LENGTH MAY VARY DEPENDING ON PRODUCT APPROVED TO USE ON THE PROJECT.
		TOTAL	200	4	4	

GUARDRAIL NOTES:

1. GUARDRAIL BEGIN AND END STATIONS INCLUDE BRIDGE RAILING ON APPROACH SLAB (20FT), TRANSITION RAIL (21FT), AND PARALLEL GUARDRAIL TERMINALS (50FT).
2. INSTALL END TERMINALS PER MANUFACTURER'S INSTRUCTIONS.
3. INSTALL W-BEAM GUARDRAIL WITH 6' POST SPACING, MINIMUM W-BEAM GUARDRAIL POST LENGTH SHALL BE 6' PER STANDARD PLAN G-10.20 CASE 3 ON PLAN SHEET V12.
4. FOR PARALLEL GUARDRAIL TERMINALS, CONSTRUCT THE GUARDRAIL TERMINAL WIDENING IN ACCORDANCE WITH THE "STANDARD DETAIL" ON STANDARD PLAN G-20.12, PLAN SHEET V13. THE END OFFSET (X) SHALL BE 2 FEET. DO NOT USE THE ALTERNATE DETAIL ON THIS PROJECT.
5. INSTALL GUARDRAIL REFLECTORS AT THE INTERVALS NOTED ON THE PLANS AND STANDARD PLANS, STARTING WITH THE FIRST MID-SPAN HOLE BEYOND TERMINAL SECTIONS. THIS MODIFIES NOTE 1 UNDER SECTION 606-3.01. DO NOT INSTALL GUARDRAIL REFLECTORS WITHIN THE LIMITS OF PARALLEL TERMINALS OR AT POST LOCATIONS.
6. IN ADDITION TO THE GUARDRAIL REFLECTORS, INSTALL GUARDRAIL FLEXIBLE DELINEATORS AS SHOWN ON STANDARD PLAN G-00.04, SHEET 5 OF 5 ON PLAN SHEET V10.

SUPERELEVATION SUMMARY

CURVE P.I.	RADIUS (FT)	BEGIN TRANSITION	TRANSITION LENGTH (FT)	CURVE P.C.	BEGIN FULL SUPERELEVATION	SUPERELEVATION RATE (%)	END FULL SUPERELEVATION	CURVE P.T.	TRANSITION LENGTH (FT)	END TRANSITION	REMARKS
"O" 21+89.49	955	"O" 17+95.00	215	"O" 19+64.66	"O" 20+10.00	6%	"O" 23+65.00	"O" 24+06.28	215	"O" 25+80.00	
"D" 40+89.82	380	"D" 37+95.00	155	"D" 39+20.71	"D" 39+50.00	6%	N/A	"D" 42+52.56	N/A	N/A	SUPERELEVATION TO MATCH EXISTING ROAD. NO TRANSITION OUT OF SUPERELEVATION.

SUPERELEVATION NOTES:

1. THE SUPERELEVATION ROTATION POINT IS CENTERLINE AT PROFILE GRADE.
2. SEE STANDARD PLAN I-81.00 ON SHEET V17 FOR SUPERELEVATION TRANSITION DETAILS. THE TRANSITION LENGTHS GIVEN IN THE SUMMARY DO NOT INCLUDE THE $\frac{1}{2}$ VERTICAL CURVE LENGTHS SHOWN ON EACH END OF THE TRANSITION.

Preliminary Plans

SUMMARY TABLES

STATE OF ALASKA 49TH
GUANGYAN TU GRIFFIN
CE 11229
REGISTERED PROFESSIONAL ENGINEER

PLANS DEVELOPED BY: STATE OF ALASKA DEPARTMENT OF TRANSPORTATION & PUBLIC FACILITIES, NORTHERN REGION, 2301 PEGER ROAD, FAIRBANKS, AK 99709 (907)451-2200
R:\Projects\Detail_Hwy\00128_Rock_Creek_Brdg\6 Design\4 CADD\ Plans\00128_D-SUMMARY-D1 SUMMARY TABLES Thu, Sep/03/20 03:23pm

NO.	DATE	REVISION

STATE	PROJECT DESIGNATION	YEAR	SHEET NO.	TOTAL SHEETS
ALASKA	0750015/NFHWY00128	2020	E1	E4

CULVERT SUMMARY

STATION	OFFSET (FT)	202.0017.0000 REMOVAL OF CULVERT PIPE (EA)	603.0001.0024 CSP 24 INCH (LF)	616.0002.0050 THAW PIPE ½ INCH DIAMETER (EA)	REMARKS
"O" 12+58	28.0 RT	–	38	1	
"O" 18+14	28.0 RT	–	48	1	
"O" 21+79	28.3 LT	1	57	1	REPLACE
"O" 24+21	39.5 LT	1	61	1	REPLACE
	TOTAL	2	204	4	

CULVERT NOTES:

1. SEE STANDARD PLAN D–01.02 AND D–4.21 FOR MINIMUM PIPE SPACING AND COVER REQUIREMENTS.
2. INSTALL NEW CULVERTS IN ACCORDANCE WITH STANDARD PLAN D–01.02 INSTALLATION TYPE "C".
3. ENGINEER TO FIT PIPE IN FIELD TO ENSURE PROPER DRAINAGE.
4. STATIONS ARE APPROXIMATE AND SUBJECT TO CHANGE AS DIRECTED BY THE ENGINEER.
5. FOR CULVERT INSTALLATION WARP THE EMBANKMENT SLOPE AS SHOWN IN THE CULVERT SLOPE WARPING DETAIL SHOWN ON THIS SHEET. THIS WORK IS SUBSIDIARY TO 603 PAY ITEMS.

MARKER POST NOTES:

1. STAMP LINE STATION, TOTAL LENGTH & DIAMETER OF PIPE INTO A 2"x4"x0.064" BRASS PLATE. FASTEN BRASS PLATE TO THE SIDE OF THE MARKER POST FACING TRAFFIC.
2. DRILL ALL BOLT HOLES, COAT HOLES WITH ZINC RICH PAINT. FLAME CUTTING IS NOT PERMITTED.
3. MARKER POST ENDS SHALL BE SQUARE.
4. PLACE GASKET MATERIAL BETWEEN DISSIMILAR METALS. GASKET MATERIAL MUST BE APPROVED PRIOR TO INSTALLATION.
5. REFER TO 613 SECTION FOR CULVERT MARKER POST SPECIFICATIONS.

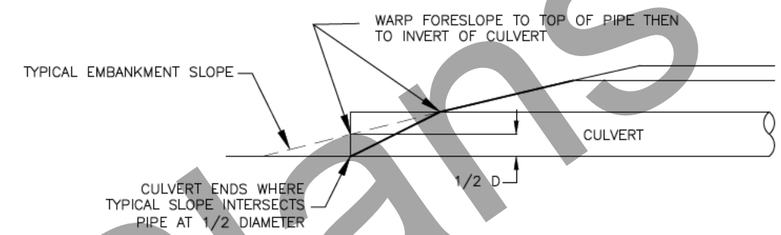

CULVERT SLOPE WARPING DETAIL
2:1 OR FLATTER FORESLOPES

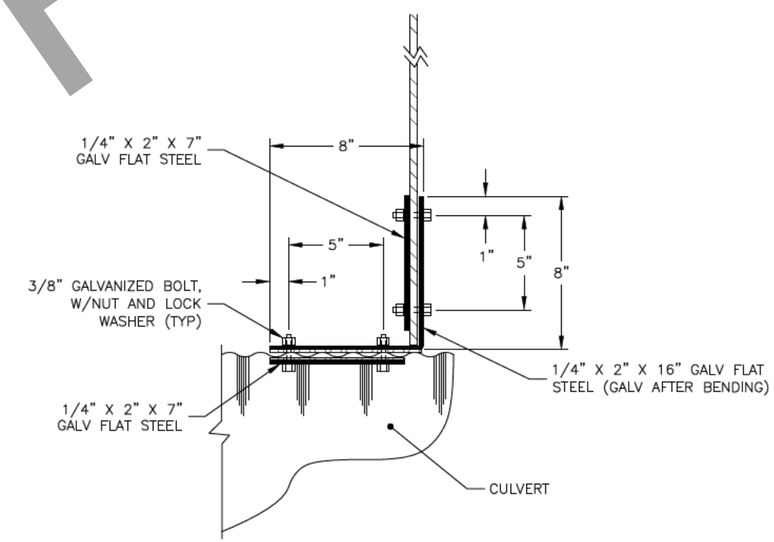

BRACKET DETAIL

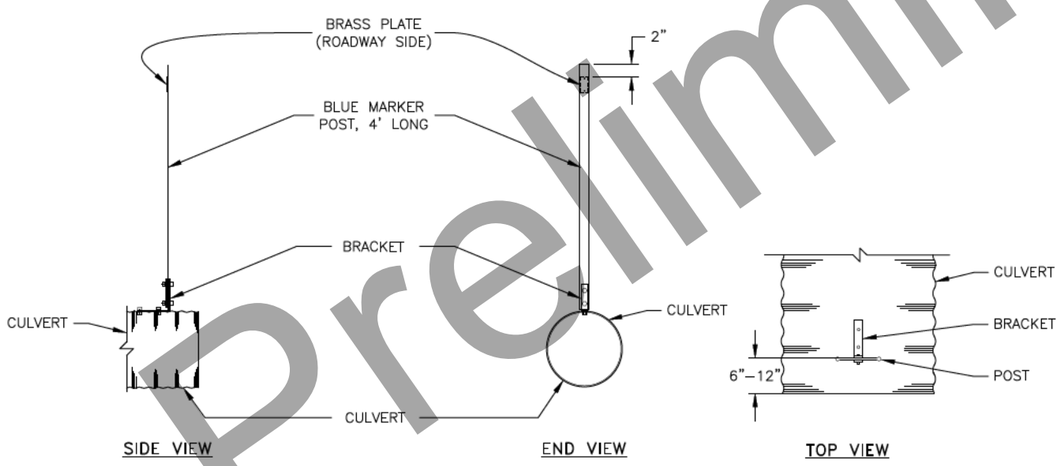

CULVERT MARKER POST DETAIL

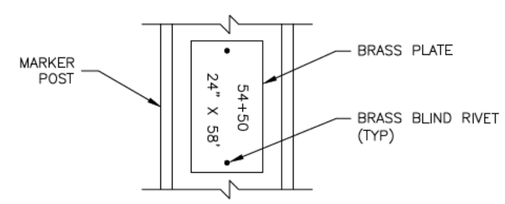

STAMP STATION AND PIPE SIZE, USING 3/8" HIGH MINIMUM LETTERS INTO A 2" X 4" X 0.064" THICK BRASS PLATE. FASTEN PLATE TO THE SIDE FACING THE ROADWAY WITH TWO 1/8" BRASS BLIND RIVETS.

BRASS PLATE DETAIL

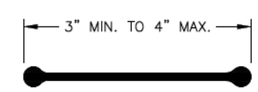

POST DETAIL

CULVERT DETAILS

STATE OF ALASKA 49TH
GUANGYAN TU GRIFFIN
CE 11229
REGISTERED PROFESSIONAL ENGINEER

Preliminary Plans

PLANS DEVELOPED BY: STATE OF ALASKA DEPARTMENT OF TRANSPORTATION & PUBLIC FACILITIES, NORTHERN REGION, 2301 PEGER ROAD, FAIRBANKS, AK 99709 (907)451-2200
R:\Projects\Detail_Hwy\00128_Rock_Creek_Brdg\6 Design\4 CAD\1 Plans\00128_E-CULVERTS-E1 CULVERT DETAILS Thu, Sep/03/20 03:23pm

NO.	DATE	REVISION

STATE	PROJECT DESIGNATION	YEAR	SHEET NO.	TOTAL SHEETS
ALASKA	0750015/NFHWY00128	2020	E2	E4

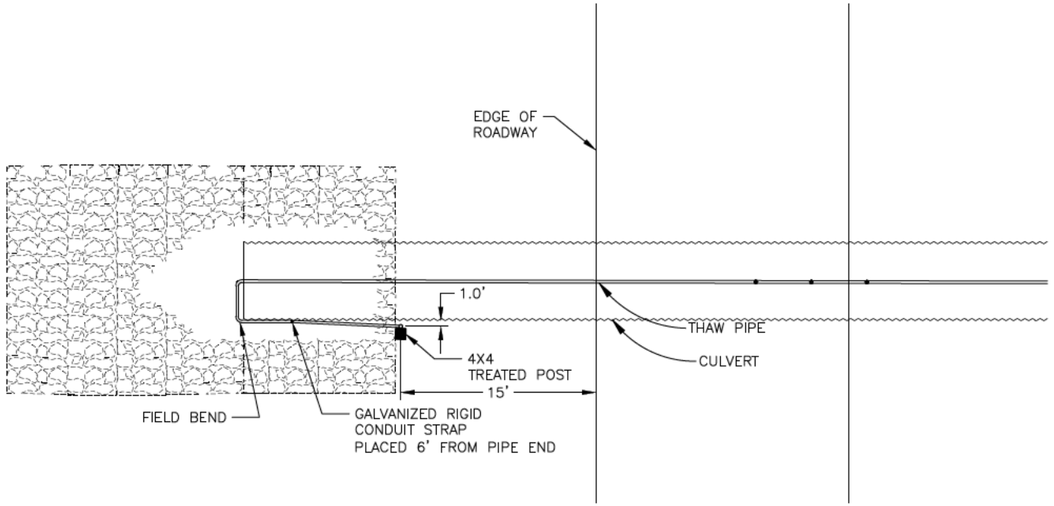

FILL CONDITION TOP VIEW

NOT TO SCALE

THAW PIPE NOTES:

1. REFER TO THE CULVERT SUMMARY FOR THAW PIPE LOCATIONS AND QUANTITIES.
2. LAY THE THAW PIPE INSIDE ON THE BOTTOM OF THE SPECIFIED CULVERT (NO INTERNAL PIPE HANGERS OR INTERNAL TIE–DOWN STRAPS ARE REQUIRED).
3. DO NOT LOCATE ANY THAW PIPE JOINTS OR COUPLINGS WITHIN 30 INCHES INSIDE OF CULVERT ENDS.
4. ALL THAW PIPES SHALL BE WATER TIGHT. SEAL ALL THAW PIPE JOINTS EXCEPT THE END CAPS WITH AN APPROVED SEALING COMPOUND.
5. THAW PIPES SHALL BE BENT WITHOUT KINKS 180 DEGREES AROUND CULVERT ENDS FROM THE INSIDE TO OUTSIDE OF THE CULVERT WITH NO GREATER THAN 6–IN BEND RADIUS. THE BEND SHALL NOT PROTRUDE MORE THAN 12 INCHES BEYOND THE END OF THE CULVERT. DO NOT LOCATE THAW PIPE JOINTS OR COUPLINGS WITHIN 6 INCHES OF THE BEND OUTSIDE OF CULVERT ENDS.
6. USE PRESSURE–TREATED WOOD SUPPORT POSTS OF HEM–FIR, NO. 2 OR BETTER, FOR EACH THAW PIPE STAND. PRESERVATIVE SHALL BE AMMONIACAL ZINC ARSENATE (ACZA), OR CHROMATED COPPER ARSENATE (CCA), PRESSURE TREATED IN ACCORDANCE WITH AASHTO M133.
7. EMBED EACH TREATED SUPPORT POST A MINIMUM OF 4 FEET.
8. FASTEN THAW PIPES TO SUPPORT POSTS WITH GALVANIZED RIGID CONDUIT STRAPS ON 1–FT CENTERS AND 2" MINIMUM LENGTH GALVANIZED LAG SCREWS WITH LOCK WASHERS. USE LAG SCREWS HAVING A DIAMETER SIZED TO MATCH THE HOLES IN THE STRAP (SEE DETAIL).
9. WHEN BEND RUN LENGTH EXCEEDS 5 FEET, LAY THE EXPOSED THAW PIPE ON THE EXPOSED CULVERT PIPE AND FLUSH TO THE EMBANKMENT SURFACE FOR THE LENGTH REQUIRED TO REACH THE SUPPORT POST AS APPROVED BY THE ENGINEER.
10. FILL ALL THAW PIPES WITH A MIX OF TINTED PROPYLENE GLYCOL ANTIFREEZE AND WATER TO PROTECT AGAINST FREEZING DOWN TO –50 DEGREES FAHRENHEIT, THEN CAP THE THAW PIPE.
11. ALL LABOR AND MATERIALS REQUIRED TO INSTALL THE THAW PIPES AND SUPPORT POSTS ARE SUBSIDIARY TO PAY ITEM 616.0002.0050.

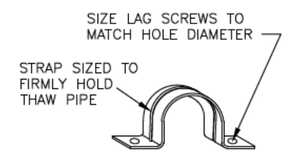

GALVANIZED RIGID CONDUIT STRAP

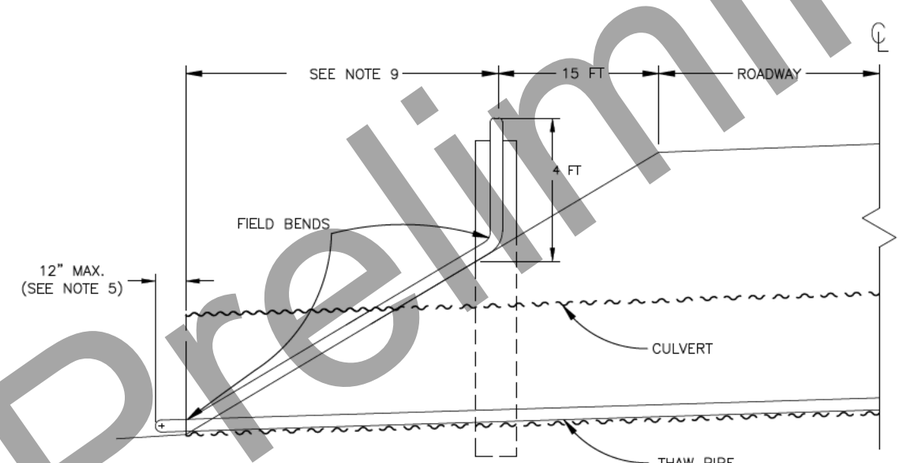

SECTION VIEW

APPLIES TO BOTH SIDES OF THE ROADWAY

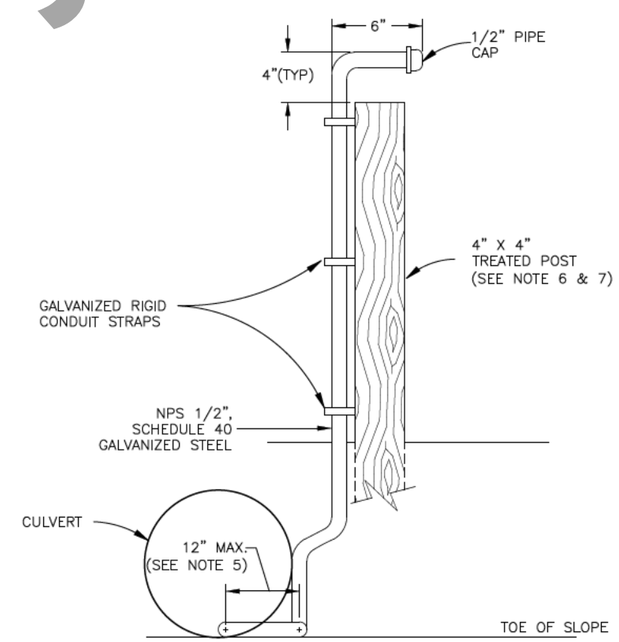

STAND PIPE

THAW PIPE DETAILS

CULVERT THAW PIPES

STATE OF ALASKA 49TH GUANGYAN TU GRIFFIN CE 11229 REGISTERED PROFESSIONAL ENGINEER

Preliminary Plans

PLANS DEVELOPED BY: HDR ENGINEERING INC, 2525 C STREET SUITE 500, ANCHORAGE ALASKA, 99503, (907)644–2000 CERT. OF AUTH. NO. AECC569
R:\Projects\Denali_Hwy\00128_Rock_Creek_Brg\6 Design\4 CAD\1 Plots\00128_E–DETAILS–E2 CULVERT THAW PIPE DETAILS Thu, Sep/03/20 03:23pm

NO.	DATE	REVISION

STATE	PROJECT DESIGNATION	YEAR	SHEET NO.	TOTAL SHEETS
ALASKA	0750015/NFHWY00128	2020	E3	E4

APPROACH SUMMARY

STATION	LT	RT	ANGLE (DEG)	WIDTH (FT)	LT RADIUS (FT)	RT RADIUS (FT)	LANDING LENGTH (FT)	REMARKS
"O" 12+61		X	120	14	20	40	20	
"O" 18+06		X	60	14	25	12.5	20	
"O" 18+76	X		90	8	5	5	5	
"O" 21+85	X		75	20	40	20	30	
"O" 24+21	X		90	20	25	25	30	

APPROACH NOTES:

1. APPROACH CONSTRUCTION SHALL BE PAID FOR UNDER 639.2000.000.
2. EXCAVATION REQUIRED TO BUILD TRANSITIONS IS SUBSIDIARY.
3. MATERIAL FOR GRADING AT APPROACHES AND ASPHALT EDGE SHALL BE AGGREGATE SURFACE COURSE, GRADING E-1.
4. RECONSTRUCT APPROACHES TO EXISTING SLOPES OR AS DIRECTED BY ENGINEER.
5. APPROACH GRADE, DIMENSIONS, AND PLACEMENT IS SUBJECT TO MINOR REVISIONS, IN THE FIELD, BY THE ENGINEER.

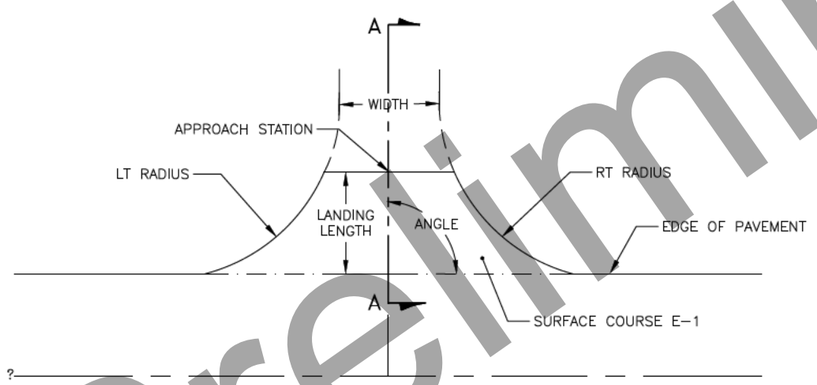

TYPICAL APPROACH DETAIL
NTS

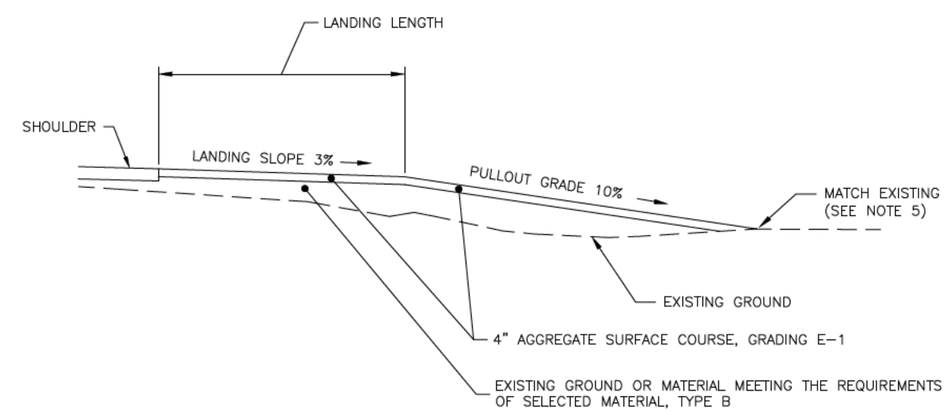

SECTION A-A
NTS

APPROACH DETAILS

STATE OF ALASKA 49TH
GUANGYAN TU GRIFFIN
CE 11229
REGISTERED PROFESSIONAL ENGINEER

Preliminary Plans

PLANS DEVELOPED BY: STATE OF ALASKA DEPARTMENT OF TRANSPORTATION & PUBLIC FACILITIES, NORTHERN REGION, 2301 PEGER ROAD, FAIRBANKS, AK 99709 (907)451-2200
R:\Projects\Denali_Hwy\00128_Rock_Creek_Brdg\6 Design\4 CADD\ Plans\00128_E-CULVERTS-E3 APPROACH DETAILS Thu, Sep/03/20 03:21pm

NO.	DATE	REVISION

STATE	PROJECT DESIGNATION	YEAR	SHEET NO.	TOTAL SHEETS
ALASKA	0750015/NFHWY00128	2020	E4	E4

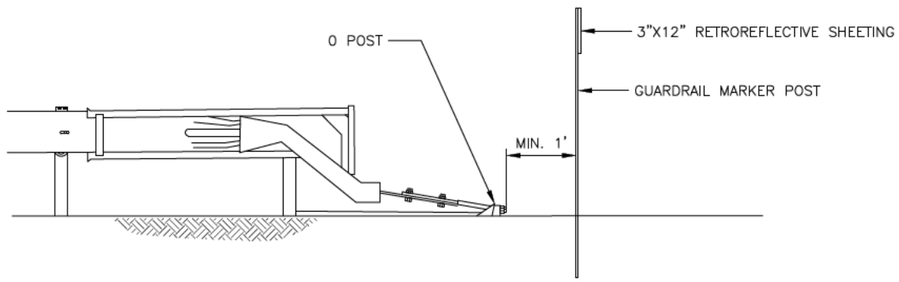

GUARDRAIL MARKER POST DETAIL
PARALLEL GUARDRAIL TERMINAL

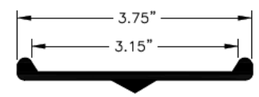

POST DETAIL
CROSS-SECTIONAL VIEW

GUARDRAIL MARKER NOTES:

1. GUARDRAIL MARKER POSTS SHALL BE YELLOW AND AT LEAST 78" LONG. POSTS SHALL MEET THE REQUIREMENTS OF SECTION 730-2.05 FLEXIBLE DELINEATOR POSTS.
2. RETROREFLECTIVE SHEETING SHALL MEET ASTM D4956 REQUIREMENTS FOR TYPE VIII, IX, OR XI. COLOR OF RETROREFLECTIVE SHEETING SHALL MATCH COLOR OF ADJACENT EDGE LINE STRIPE. PLACE RETROREFLECTIVE SHEETING ON SIDE OF MARKER POST FACING TRAFFIC IN ADJACENT LANE.
3. DRIVE OR AUGER GUARDRAIL MARKER POST 18" INTO FINISHED GROUND. BACKFILL AND COMPACT SURROUNDING SOIL.
4. PLACE CENTER OF MARKER POST IN LINE WITH TRAFFIC SIDE OF 0 POST.
5. ALL WORK AND MATERIAL REQUIRED TO INSTALL GUARDRAIL MARKER POSTS IS SUBSIDIARY TO 606 PAY ITEMS.

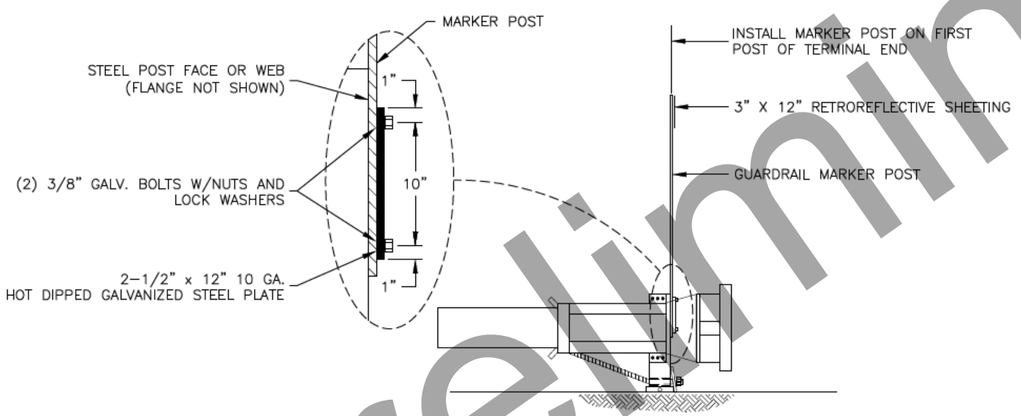

ALTERNATIVE GUARDRAIL MARKER POST – ATTACHMENT DETAIL
PARALLEL GUARDRAIL TERMINAL

ALTERNATIVE GUARDRAIL MARKER POST NOTES:

1. GUARDRAIL MARKER POSTS SHALL BE YELLOW AND AT LEAST 72" LONG. POSTS SHALL MEET THE REQUIREMENTS OF SECTION 730-2.05 FLEXIBLE DELINEATOR POSTS.
2. RETROREFLECTIVE SHEETING SHALL MEET ASTM D4956 REQUIREMENTS FOR TYPE VIII, IX, OR XI. COLOR OF RETROREFLECTIVE SHEETING SHALL MATCH COLOR OF ADJACENT EDGE LINE STRIPE. PLACE RETROREFLECTIVE SHEETING ON SIDE OF MARKER POST FACING TRAFFIC IN ADJACENT LANE.
3. DRILL ALL BOLT HOLES. COAT HOLES WITH ZINC RICH PAINT. FLAME CUTTING SHALL NOT BE PERMITTED.
4. ALL WORK AND MATERIAL REQUIRED TO INSTALL GUARDRAIL MARKER POSTS IS SUBSIDIARY TO 606 PAY ITEMS.

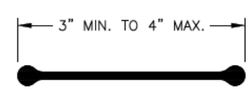

ALTERNATIVE GUARDRAIL MARKER POST
CROSS-SECTIONAL VIEW

Preliminary Plans

GUARDRAIL MARKER DETAILS

STATE OF ALASKA 49TH
GUANGYAN TU GRIFFIN
CE 11229
REGISTERED PROFESSIONAL ENGINEER

PLANS DEVELOPED BY: STATE OF ALASKA DEPARTMENT OF TRANSPORTATION & PUBLIC FACILITIES, NORTHERN REGION, 2301 PEGER ROAD, FAIRBANKS, AK 99709 (907)451-2200
R:\Projects\Detail_Hwy\00128_Rock_Creek_Brdg\6 Design\4 CAD\1 Plans\00128_E-culverts-E4 Thu, Sep/03/20 03:22pm

NO.	DATE	REVISION

STATE	PROJECT DESIGNATION	YEAR	SHEET NO.	TOTAL SHEETS
ALASKA	0750015/NFHWY00128	2020	F1	F3

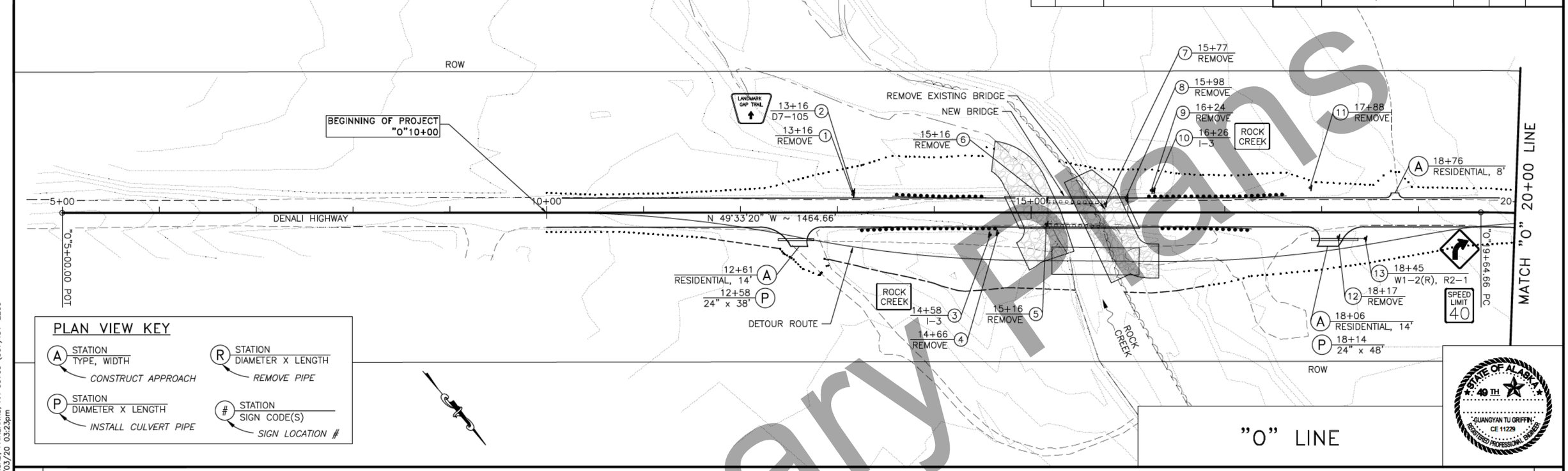

PLAN VIEW KEY

- (A) STATION / TYPE, WIDTH — *CONSTRUCT APPROACH*
- (R) STATION / DIAMETER X LENGTH — *REMOVE PIPE*
- (P) STATION / DIAMETER X LENGTH — *INSTALL CULVERT PIPE*
- (#) STATION / SIGN CODE(S) — *SIGN LOCATION #*

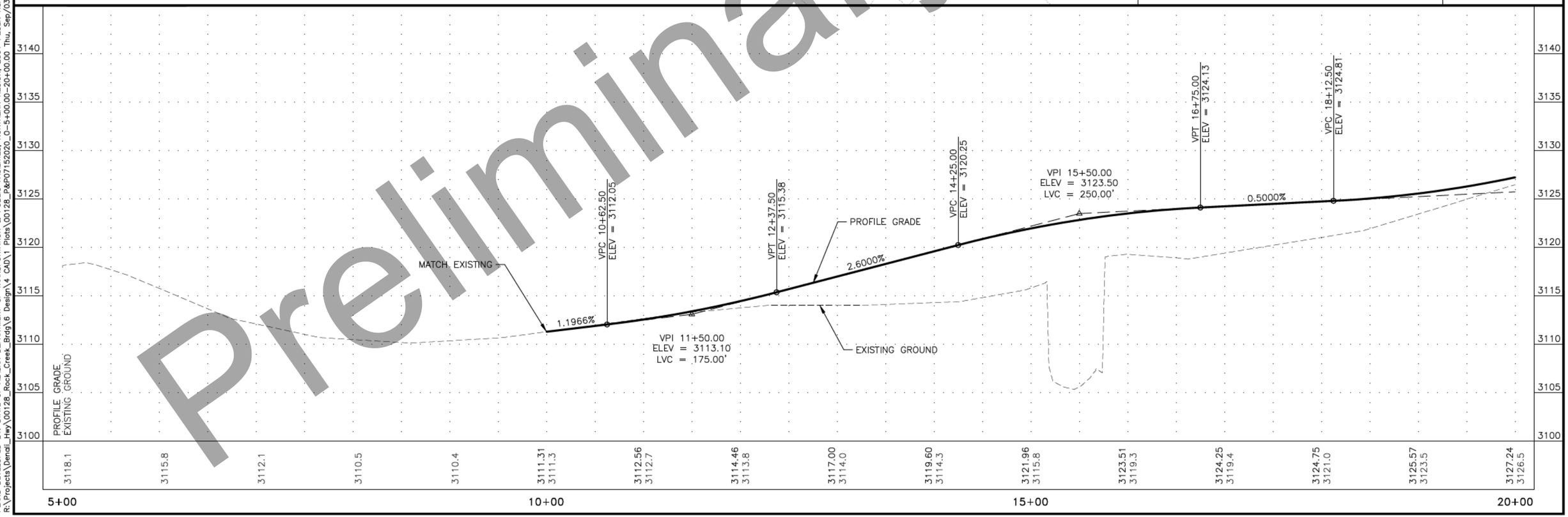

Preliminary Plans

PLANS DEVELOPED BY: STATE OF ALASKA DEPARTMENT OF TRANSPORTATION & PUBLIC FACILITIES, NORTHERN REGION, 2301 PEGER ROAD, FAIRBANKS, AK 99709 (907)451-2200
R:\Projects\Denali_Hwy\00128_Rock_Creek_Brg\6 Design\4 CAD\1 Plots\00128_P&P07152020_0-5+00.00-20+00.00 Thu, Sep/03/20 03:23pm

NO.	DATE	REVISION

STATE	PROJECT DESIGNATION	YEAR	SHEET NO.	TOTAL SHEETS
ALASKA	0750015/NFHWY00128	2020	F2	F3

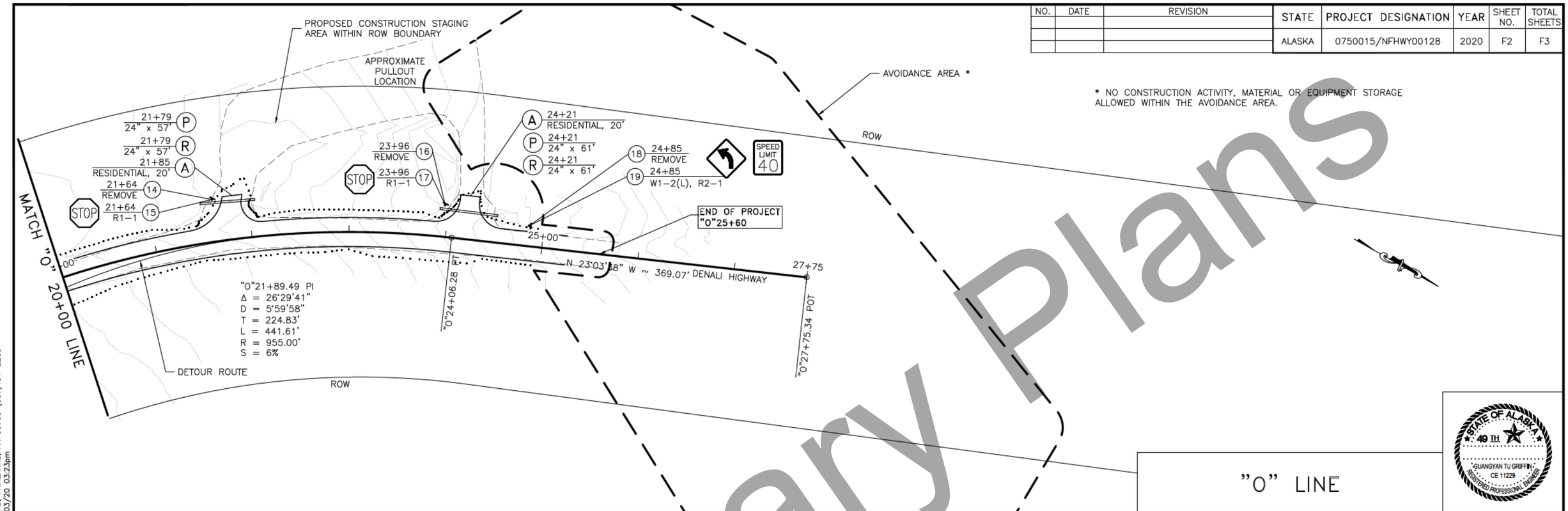

* NO CONSTRUCTION ACTIVITY, MATERIAL OR EQUIPMENT STORAGE ALLOWED WITHIN THE AVOIDANCE AREA.

"O" LINE

STATE OF ALASKA 49TH GUANGYAN TU GRIFFIN CE 11229 REGISTERED PROFESSIONAL ENGINEER

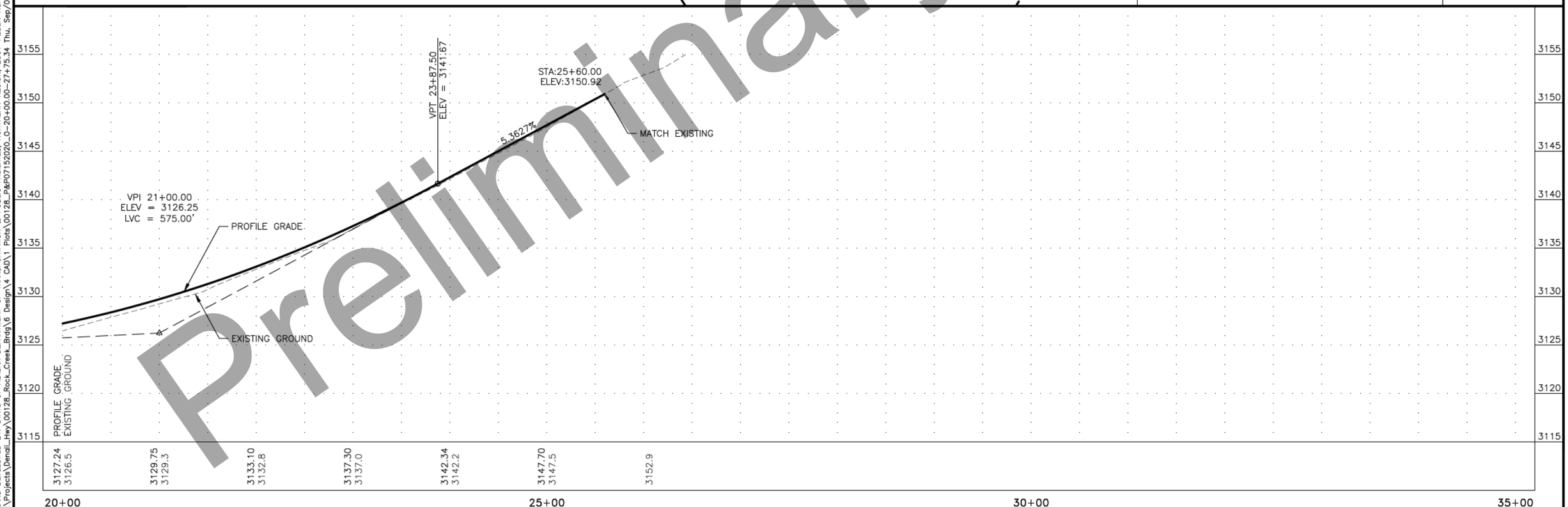

Preliminary Plans

PLANS DEVELOPED BY: STATE OF ALASKA DEPARTMENT OF TRANSPORTATION & PUBLIC FACILITIES, NORTHERN REGION, 2301 PEGER ROAD, FAIRBANKS, AK 99709 (907)451-2200
R:\Projects\Denali_Hwy\00128_Rock_Creek_Brg\6 Design\4 CAD\1 Plots\00128_P&P071520\20_0-20+00.00-27+75.34 Thu, Sep/03/20 03:23pm

NO.	DATE	REVISION

STATE	PROJECT DESIGNATION	YEAR	SHEET NO.	TOTAL SHEETS
ALASKA	0750015/NFHWY00128	2020	F3	F3

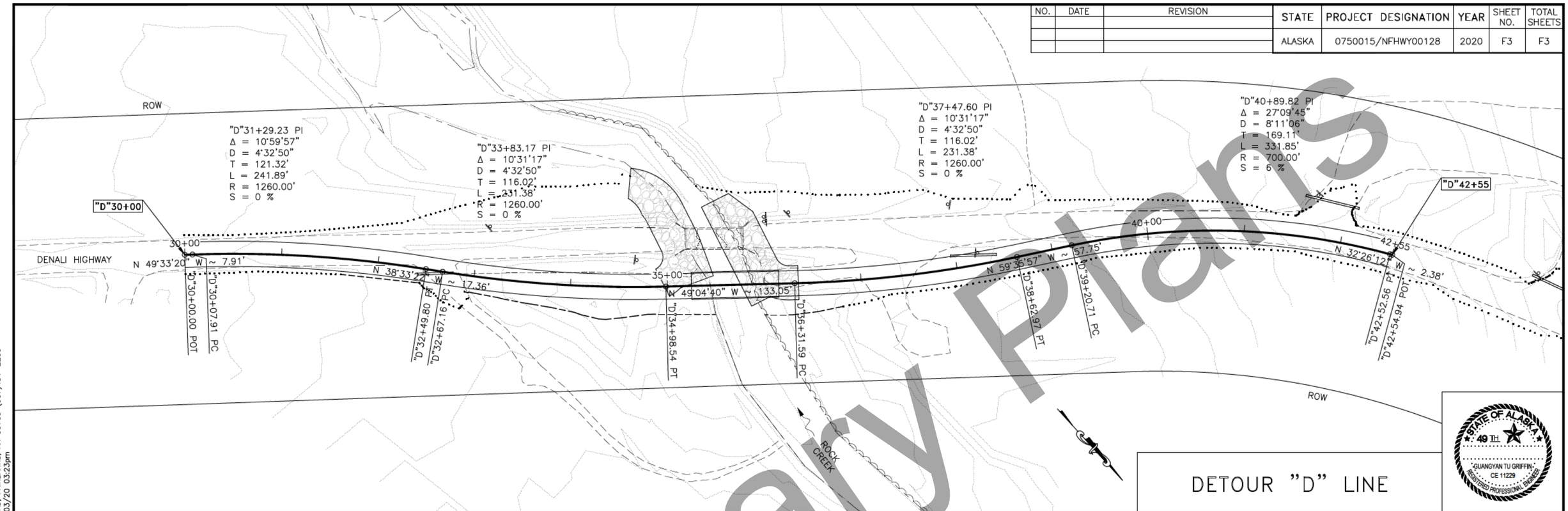

DETOUR "D" LINE

STATE OF ALASKA 49TH GUANGYAN TU GRIFFIN CE 11229 REGISTERED PROFESSIONAL ENGINEER

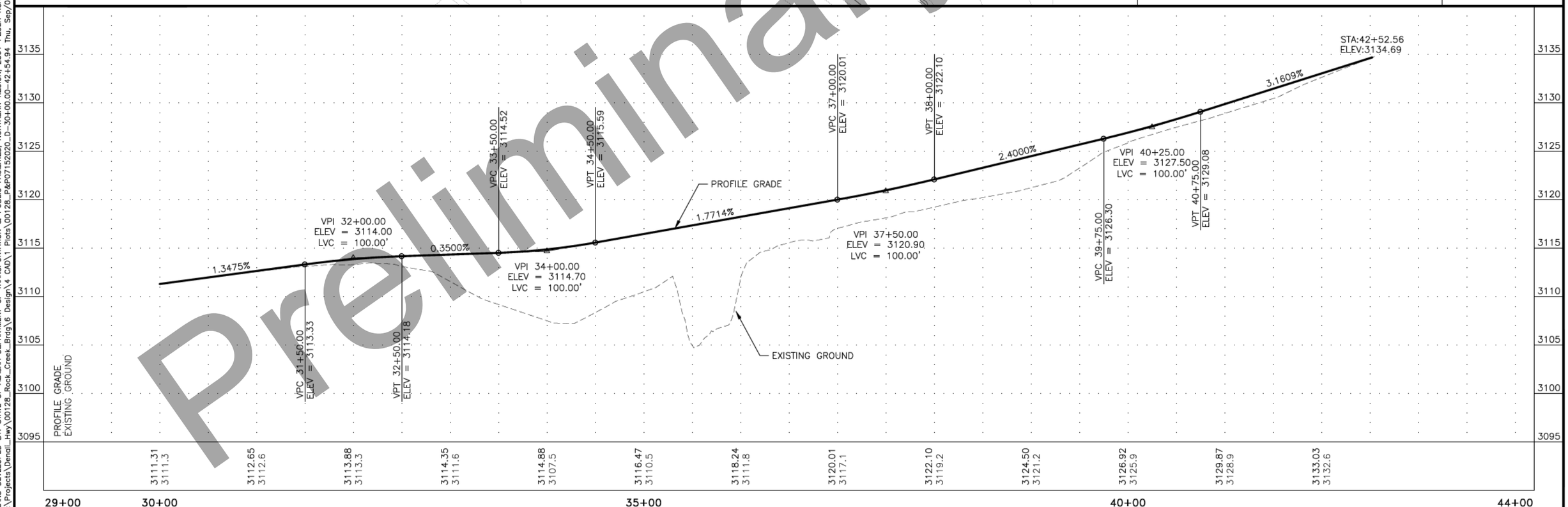

Preliminary Plans

PLANS DEVELOPED BY: STATE OF ALASKA DEPARTMENT OF TRANSPORTATION & PUBLIC FACILITIES, NORTHERN REGION, 2301 PEGER ROAD, FAIRBANKS, AK 99709 (907)451-2200
R:\Projects\Denali_Hwy\00128_Rock_Creek_Brg\6 Design\4 CAD\1 Plots\00128_P&P07152020_D-30+00.00-42+54.94 Thu, Sep/03/20 03:23pm

NO.	DATE	REVISION

STATE	PROJECT DESIGNATION	YEAR	SHEET NO.	TOTAL SHEETS
ALASKA	0750015/NFHWY00128	2020	G1	61

GRADING NOTES:

1. FINISHED CONTOURS SHOWN FOR REFERENCE. THE TYPICAL SECTIONS CONTROL.
2. CONTOUR INTERVAL = 1-FT.
3. REMOVAL OF EXISTING ROAD AND EXISTING BRIDGE ABUTMENTS WILL BE PAID FOR UNDER PAY ITEM 203.0003.0000 UNCLASSIFIED EXCAVATION.

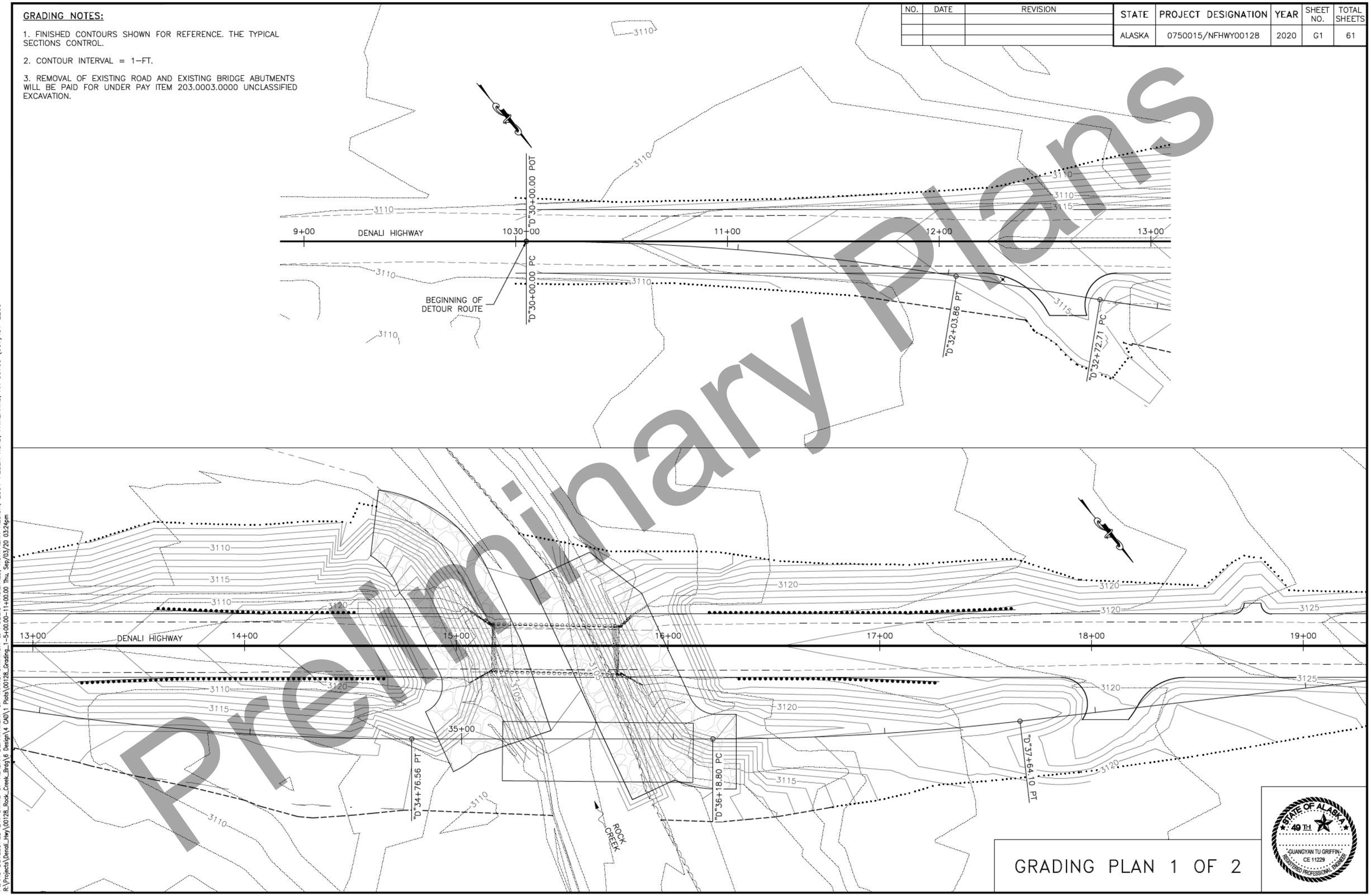

GRADING PLAN 1 OF 2

STATE OF ALASKA 49TH
GUANGYAN TU GRIFFIN
CE 11229
REGISTERED PROFESSIONAL ENGINEER

Preliminary Plans

PLANS DEVELOPED BY: STATE OF ALASKA DEPARTMENT OF TRANSPORTATION & PUBLIC FACILITIES, NORTHERN REGION, 2301 PEGER ROAD, FAIRBANKS, AK 99709 (907)451-2200
R:\Projects\Denali_Hwy\00128_Rock_Creek_Brug\6 Design\4 CAD\1 Plots\00128_Grading_1-5+00.00-11+00.00 Thu, Sep/03/20 03:24pm

NO.	DATE	REVISION

STATE	PROJECT DESIGNATION	YEAR	SHEET NO.	TOTAL SHEETS
ALASKA	0750015/NFHWY00128	2020	G2	61

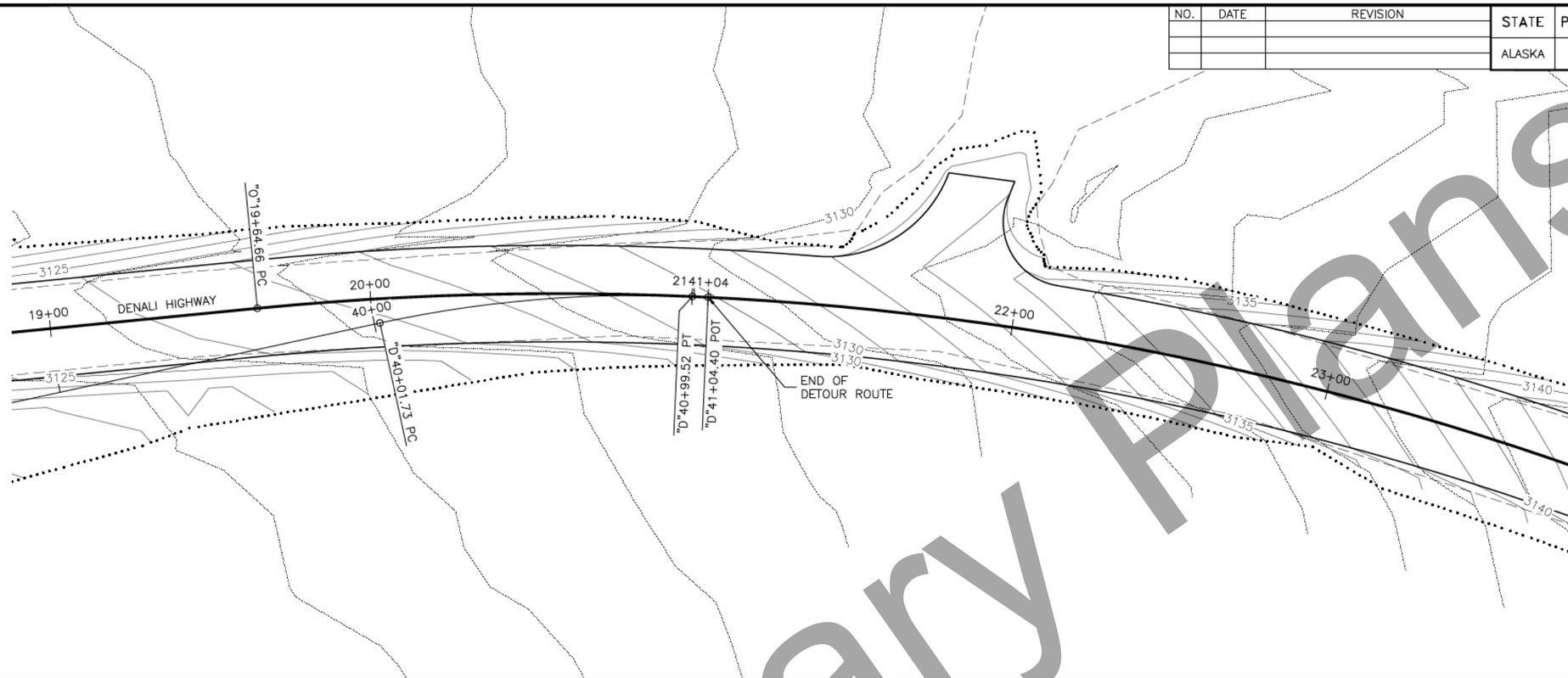

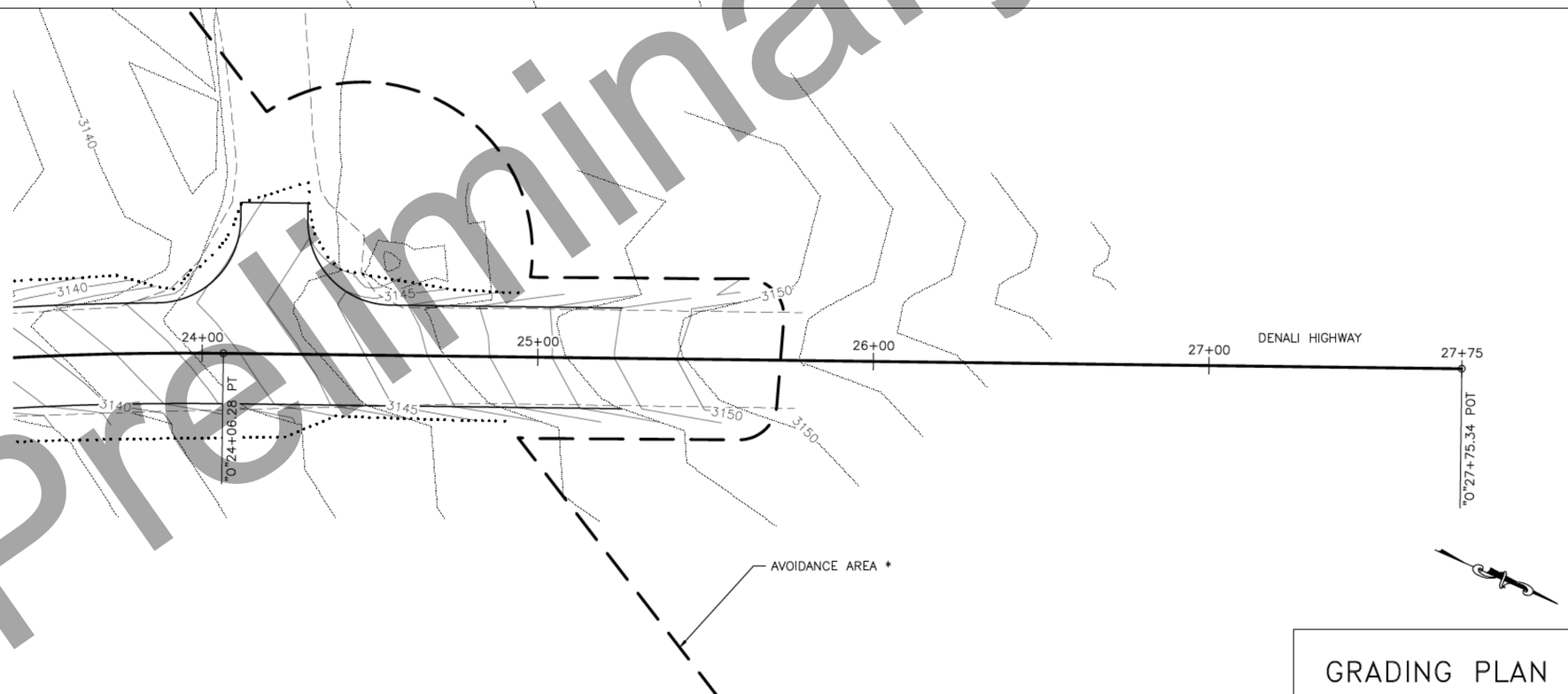

GRADING PLAN 2 OF 2

STATE OF ALASKA 49TH
GUANGYAN TU GRIFFIN
CE 11229
REGISTERED PROFESSIONAL ENGINEER

Preliminary Plans

PLANS DEVELOPED BY: STATE OF ALASKA DEPARTMENT OF TRANSPORTATION & PUBLIC FACILITIES, NORTHERN REGION, 2301 PEGER ROAD, FAIRBANKS, AK 99709 (907)451-2200
R:\Projects\Denali_Hwy\00128_Rock_Creek_Brig\6 Design\4 CAD\1 Plots\00128_Grading_1-17+00.00-23+00.00 Thu, Sep/03/20 03:24pm

NO.	DATE	REVISION

STATE	PROJECT DESIGNATION	YEAR	SHEET NO.	TOTAL SHEETS
ALASKA	0750015/NFHWY00128	2020	H1	H1

SIGNING SUMMARY

LOC. NO.	STATION	LOCATION LT.	LOCATION RT.	ASDS CODE	LEGEND	SIZE H (INCHES)	SIZE X	SIZE V	BRACING/ FRAMING BRACED	AREA FRAMED	AREA (SQ.FT.)	MTG. HGT. (FT.)	DIR.	POST TYPE	POST SIZE (INCHES)	POST NO.	REMARKS
1	13+16	X			LANDMARK GAP TRAIL												REMOVE AND SALVAGE
2	13+16	X		D7-105	LANDMARK GAP TRAIL	48	x	36	X		12		W	PST	2.5	1	
3	14+58		X	I-3	ROCK CREEK	24	x	18	X		3		E	PST	2.5	1	
4	14+66		X		YIELD												REMOVE AND SALVAGE
					TO ONCOMING TRAFFIC												
5	15+16		X		OBJECT MARKER												REMOVE AND SALVAGE
6	15+16	X			OBJECT MARKER												REMOVE AND SALVAGE
7	15+77	X			OBJECT MARKER												REMOVE AND SALVAGE
8	15+98	X			ROCK CREEK												REMOVE AND SALVAGE
9	16+24	X			YIELD												REMOVE AND SALVAGE
					TO ONCOMING TRAFFIC												
10	16+26	X		I-3	ROCK CREEK	24	x	18	X		3		W	PST	2.5	1	
11	17+88	X			ONE LANE BRIDGE												REMOVE AND SALVAGE
					ONE VEHICLE AT A TIME												
12	18+17		X		CURVE												REMOVE AND SALVAGE
					40 MPH												
13	18+45		X	W1-2(R)	CURVE	30	X	30	X		6.25		E	PST	2.5	1	
				R2-1	40 MPH	24	X	30	X		5						
14	21+64	X			STOP												REMOVE AND SALVAGE
15	21+64	X		R1-1	STOP	30	x	30	X		6.25		S	PST	2.5	1	
16	23+96	X			STOP												REMOVE AND SALVAGE
17	23+96	X		R1-1	STOP	30	x	30	X		6.25		S	PST	2.5	1	
18	24+85	X			CURVE								E				REMOVE AND SALVAGE
					40 MPH												
19	24+85	X		W1-2(L)	CURVE	30	x	30	X		6.25		E	PST	2.5	1	
				R2-1	40 MPH	24	x	30	X		5						
				SUBTOTAL =							53						

POST TYPE LEGEND:

PST = PERFORATED STEEL TUBE
TS = TUBE STEEL (SQUARE STRUCTURAL STEEL TUBING)
W_X_ = WIDE FLANGE

NOTE:

1. REMOVE AND DISPOSE OF ALL EXISTING SIGNS AND SIGN FOUNDATIONS WITHIN THE PROJECT LIMITS, EXCEPT THOSE DESIGNATED FOR REINSTALLATION, SALVAGE OR OTHERWISE NOTED.
2. MOUNTING HEIGHTS ARE PER STANDARD PLAN S-05.01 UNLESS OTHERWISE NOTED.
3. DETERMINE POST LENGTHS IN THE FIELD. DO NOT EXTEND POSTS ABOVE TOP OF SIGN.
4. INSTALL PST SIGN POSTS WITH SLEEVE TYPE SOIL EMBEDMENT. EMBED PST IN SLEEVE 12"-24"._PER STANDARD PLAN S-30.05. ATTACH THE SIGN POST TO THE SLEEVE USING GALVANIZED 3/8" BOLT, NUT, SPLIT LOCK WASHER AND TWO FLAT WASHERS.
5. 1/4" X 1 1/2" ALUMINUM ALLOY 6061-T6 BAR MAY ALSO BE USED TO FABRICATE SIGN BRACES AS SHOWN ON STANDARD PLAN S-01.01.
6. ATTACH ALL SIGNS TO THEIR SUPPORTS WITH 3/8" BOLTS, EXCEPT ATTACH UNFRAMED SIGNS TO PST POSTS WITH ALUMINUM DRIVE RIVETS. WIND WASHERS ARE NOT REQUIRED WITH DRIVE RIVETS. INCLUDE SPLIT LOCK WASHERS WHEN BOLTS ARE USED.
7. ALL FASTENER HARDWARE SHALL MEET THE REQUIREMENTS OF THE "FASTENER SPECIFICATION TABLE" ON SHEET V23.
8. INSTALL OM-3 OBJECT MARKERS, USING A SLEEVE TYPE SOIL EMBEDMENT FOUNDATION, LOCATED MIDWAY BETWEEN THE FIRST AND SECOND GUARDRAIL POSTS NEAREST TO THE BRIDGE. MOUNT THE SIGN PANEL SO THE BOTTOM IS 2 INCHES ABOVE THE TOP OF GUARDRAIL WITH THE NEAR EDGE LINING UP WITH THE BACK OF THE RAIL.
9. STOP (R1-1) AND YIELD (R1-2) SIGN LOCATIONS, ESPECIALLY THOSE AT LARGE RADIUS INTERSECTIONS, MAY NEED ADJUSTMENT IN THE FIELD. THE ENGINEER WILL APPROVE FINAL LOCATIONS.
10. MAINTAIN EXISTING SIGNS UNTIL NEW SIGNS ARE INSTALLED. DO NOT LEAVE DUPLICATE OR CONFLICTING SIGNING UP AT ANY TIME.
11. ALL SIGNS NOTED FOR REMOVAL AND REINSTALLATION SHALL BE REPLACED AT THE CONTRACTOR'S EXPENSE IF THEY ARE DAMAGED DURING THE RELOCATION EFFORT.
12. LOCATE AND PROTECT ALL NEW AND EXISTING UNDERGROUND UTILITIES, INCLUDING BUT NOT LIMITED TO: PIPELINES, INTERCONNECT CABLES, SIGNAL SYSTEMS, LIGHTING SYSTEMS, STORM AND SANITARY SEWERS, WATER SYSTEMS, AND TELEPHONE AND ELECTRICAL CABLES, PRIOR TO INSTALLING SIGN POSTS. NOT ALL EXISTING UTILITIES MAY BE SHOWN ON THE PLANS.
13. DELIVER ALL SALVAGED SIGNS TO THE PAXSON MAINTENANCE YARD LOCATED AT 185.7 RICHARDSON HIGHWAY. PRIOR TO DELIVERING OF ALL SIGNS AND POSTS CONTACT DAVID HOFFMEISTER 822-3357 OR 259-3357 CELL.
14. CLEARING, AS DIRECTED BY THE ENGINEER, MAY BE REQUIRED TO ENSURE ADEQUATE VISIBILITY OF SIGNS. THIS WORK IS SUBSIDIARY TO PAY ITEM 615.0001.0000.

FASTENER SPECIFICATION TABLE

FASTENERS	STEEL	STAINLESS STEEL
BOLTS	ASTM A 307	ASTM F 593
NUTS	ASTM A 563	ASTM F 594
WASHERS	ASTM F 844	ASTM A 480

THESE SPECIFICATIONS APPLY TO ALL SIGN FASTENER HARDWARE ON THE PROJECT.

Preliminary Plans

SIGN SUMMARY

STATE OF ALASKA 49TH GUANGYAN TU GRIFFIN CE 11229 REGISTERED PROFESSIONAL ENGINEER

PLANS DEVELOPED BY: STATE OF ALASKA DEPARTMENT OF TRANSPORTATION & PUBLIC FACILITIES, NORTHERN REGION, 2301 PEGER ROAD, FAIRBANKS, AK 99709 (907)451-2200
R:\Projects\Denali_Hwy\00128_Rock_Creek_Brdg\6 Design\4 CAD\1 Plots\00128_H_SIGN-H1 SIGNING DETAILS Thu, Sep/03/20 03:24pm

NO.	DATE	REVISION

STATE	PROJECT DESIGNATION	YEAR	SHEET NO.	TOTAL SHEETS
ALASKA	0750015/NFHWY00128	2020	N1	N16

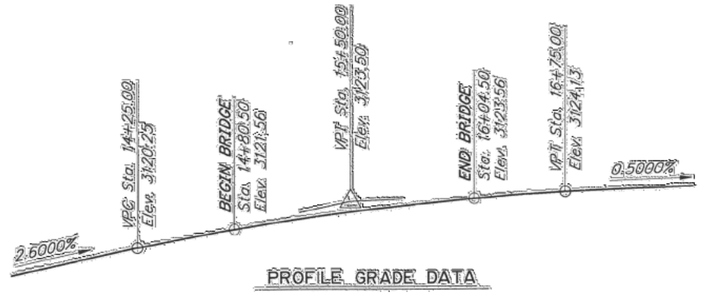

PROFILE GRADE DATA

No Scale

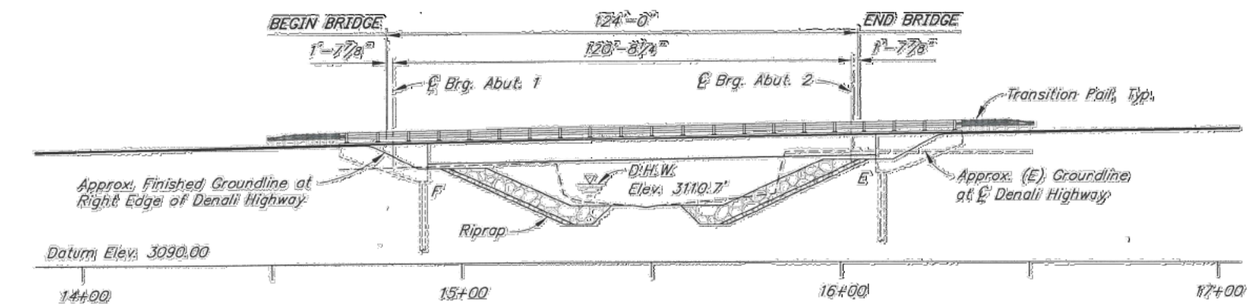

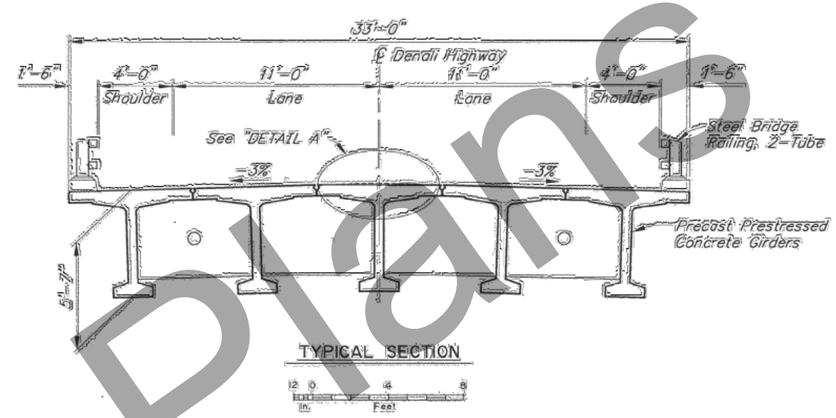

TYPICAL SECTION

12 0 4 8
In. Feet

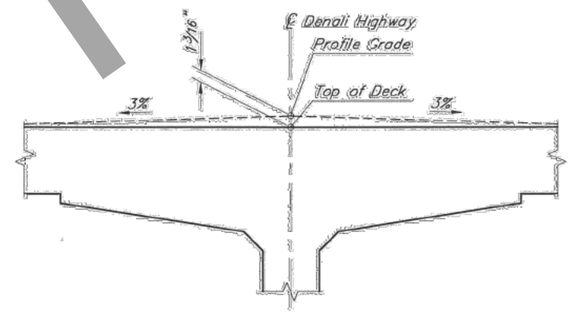

DETAIL A

12 6 0 1
In. Feet

ELEVATION

10 0 20 40
Feet

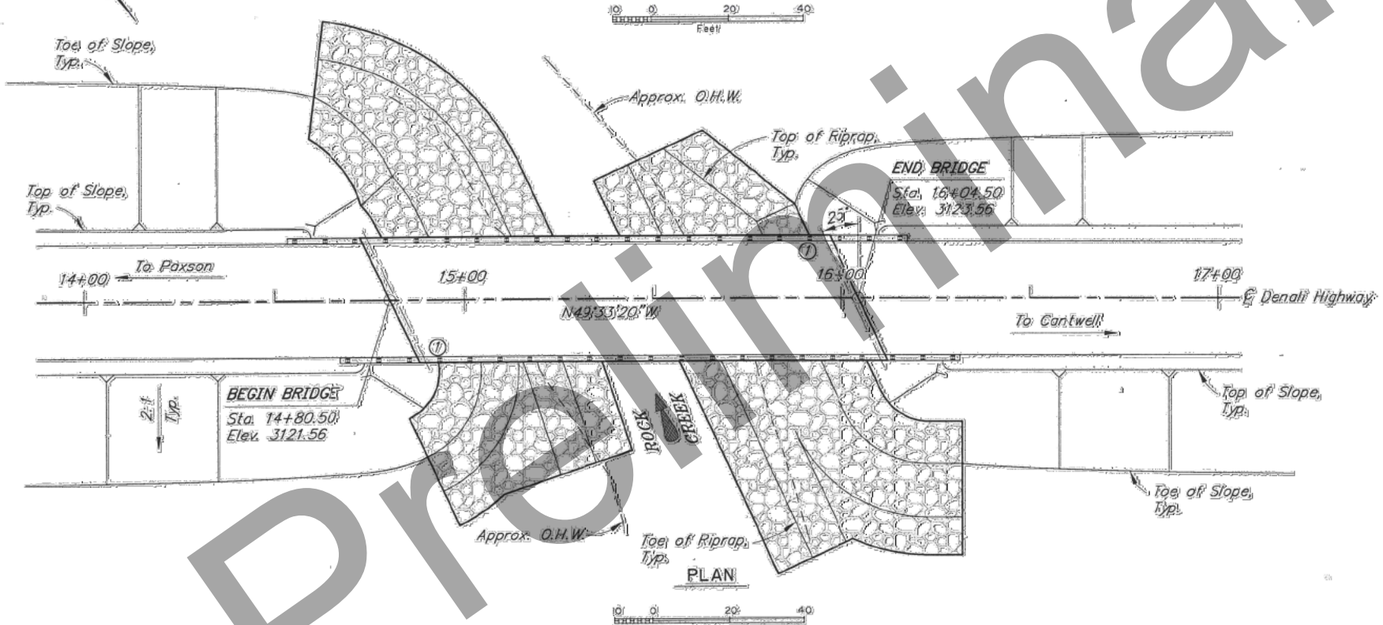

PLAN

10 0 20 40
Feet

BRIDGE DRAWING INDEX

TITLE	DWG. NO.
GENERAL LAYOUT	1
SITE PLAN	2
RIPRAP LAYOUT	3
RIPRAP DETAILS	4
ABUTMENT 1	5
ABUTMENT 2	6
WINGWALLS	7
FRAMING PLAN AND TYPICAL SECTION	8
GIRDERS	9
GIRDER DETAILS	10
STEEL BRIDGE RAILING, 2-TUBE	11
TEST HOLE LOGS AND LOCATIONS	12-16

(1) Approximate location of Bridge Number Plate.

Preliminary Plans

STATE OF ALASKA
DEPARTMENT OF TRANSPORTATION AND PUBLIC FACILITIES
BRIDGE SECTION
3132 Channel Drive
Juneau, Alaska 99801
907-465-2975

ROCK CREEK BRIDGE

DENALI HIGHWAY

GENERAL LAYOUT

BRIDGE NO. 684

DWG. NO. 1

PLANS DEVELOPED BY: STATE OF ALASKA DEPARTMENT OF TRANSPORTATION & PUBLIC FACILITIES, NORTHERN REGION, 2301 PEGER ROAD, FAIRBANKS, AK 99709 (907)451-2200
R:\Projects\Denali_Hwy\00128_Rock_Creek_Brdg\6 Design\4 CADD\1 Plots\00128_N-N1 Thu, Sep/03/20 03:24pm

NO.	DATE	REVISION

STATE	PROJECT DESIGNATION	YEAR	SHEET NO.	TOTAL SHEETS
ALASKA	0750015/NFHWY00128	2020	N2	N16

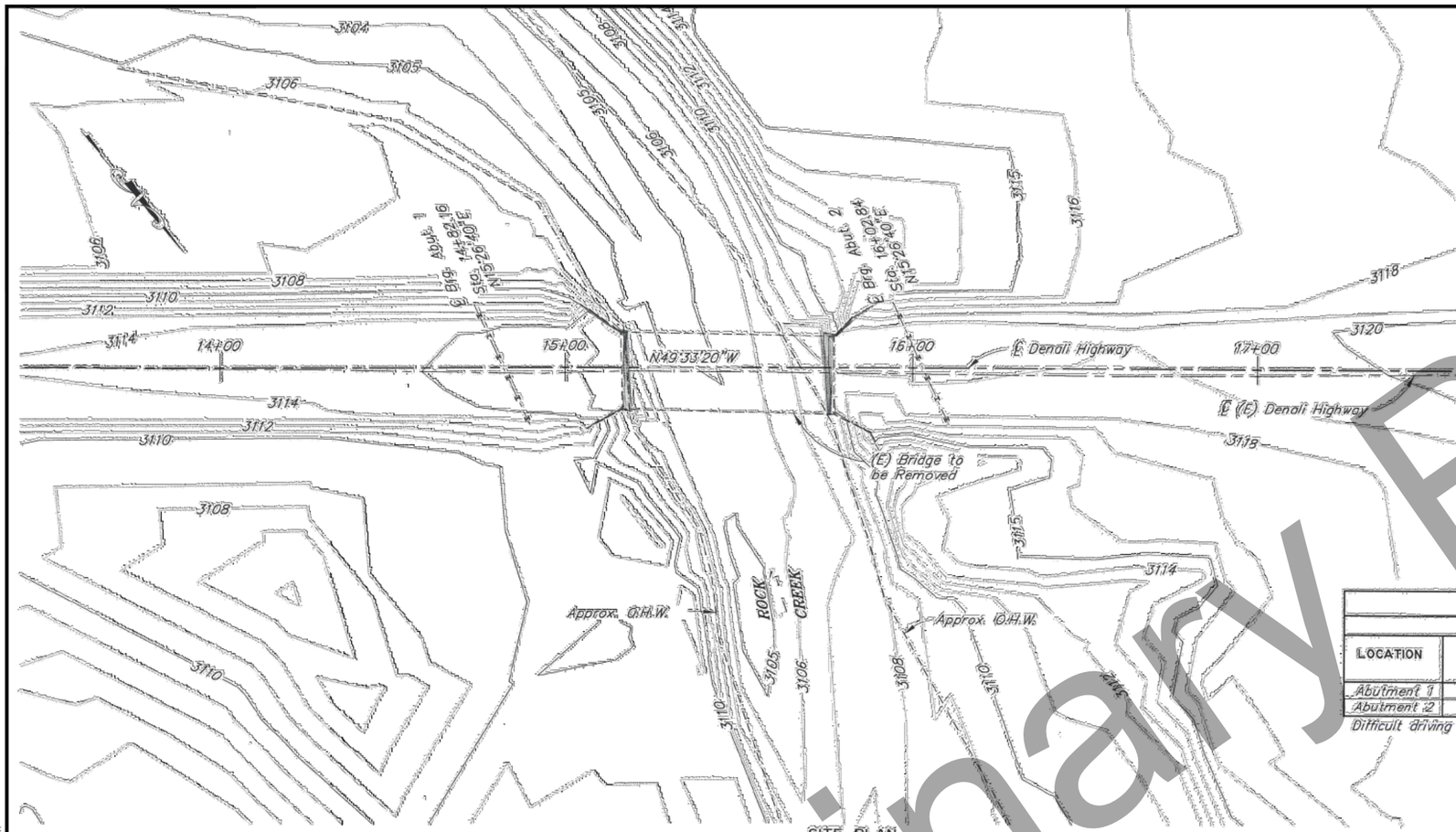

SITE PLAN

10 0 20 40
Feet

GENERAL NOTES

DESIGN:..... AASHTO LRFD Bridge Design Specifications, 2020 Edition, with latest interim specifications.

Seismic design per AASHTO Guide Specifications for LRFD Seismic Bridge Design, 2011 with latest interim revisions.

LIVE LOAD:..... HL-93

DEAD LOAD:..... Includes 50 psf for all wearing surfaces.

SEISMIC PARAMETERS:..... PGA = 0.25
S_s = 0.56
S_1 = 0.27
Site Class = D
Liquefaction Potential = Low
AASHTO 7% probability of exceedance in 75 years.

REINFORCEMENT:..... ASTM A706, Grade 60, Fy = 60,000 psi
ASTM A970 Headed bars, Class HA.
Space reinforcement evenly unless otherwise noted.

PRESTRESSED CONCRETE:..... See "GIRDERS" Dwg.

CONCRETE:..... Class A Concrete unless otherwise noted, f'c = 4,000 psi

STRUCTURAL STEEL:..... ASTM A709, Grade 36T3, Fy = 36,000 psi
Galvanize structural steel in accordance with AASHTO M111 unless noted otherwise.

STRUCTURAL STEEL PILING:..... ASTM A709, GR50T3, Fy = 50,000 psi.
Pile Tip reinforcing is required.

PILE DATA TABLE

LOCATION	PILE TYPE	DRIVING CRITERIA: MINIMUM PENETRATION (ft)	DRIVING CRITERIA: ESTIMATED PILE TIP ELEVATION (ft)	DRIVING CRITERIA: DRIVING RESISTANCE (K)	DESIGN DATA: STRENGTH I FACTORED LOAD (K)	DESIGN DATA: NOMINAL RESISTANCE (K)	DESIGN DATA: RESISTANCE FACTOR, Φ
Abutment 1	HPT14x117	45	3,038	410	265	410	0.65
Abutment 2	HPT14x117	45	3,034	410	265	410	0.65

Difficult driving conditions are expected. Pilot bore hole required for each pile.

ESTIMATE OF QUANTITIES

ITEM NO.	ITEM	PAY UNIT	ESTIMATING UNIT	SUBST.	SUPERST.	TOTAL QUANTITY
202.0023.0000	Removal of Bridge	LS	LS	ALL REQ'D	ALL REQ'D	ALL REQ'D
203.0003.0000	Unclassified Excavation	CY	CY	840	---	840
205.0006.0000	Structural Fill	CY	CY	1,060	---	1,060
501.0001.0000	Class A Concrete	LS	CY	64.7	46.5	111.2
501.0007.0000	Precast Concrete Member, 122'-2" Decked Bulb-Tee	EA	EA	---	5	5
503.0001.0000	Reinforcing Steel	LS	LBS	12,730	---	12,730
503.0002.0000	Epoxy-Coated Reinforcing Steel	LS	LBS	---	3,460	3,460
505.0005.1417	Furnish Structural Steel Piles, HPT14x117	LF	LF	930	---	930
505.0006.1417	Drive Structural Steel Piles, HPT14x117	EA	EA	72	---	72
507.0001.0002	Steel Bridge Railing, 2-Tube	LF	LF	---	328.0	328.0
520.0001.0000	Temporary Crossings	LS	LS	ALL REQ'D	ALL REQ'D	ALL REQ'D
606.0016.0000	Transition Rail	EA	EA	---	4	4
611.0001.0001	Riprap, Class I	CY	CY	540	---	540
611.0001.0003	Riprap, Class III	CY	CY	1,570	---	1,570

Item numbers are for reference only. Quantities shown are not necessarily the pay quantities nor the total quantity of the particular item.

ABBREVIATIONS:

℄	= centerline	e.f.	= each face	min.	= minimum
ℙ	= plate	e.w.	= each way	MSE	= mechanically stabilized earth
&	= and	Ext.	= exterior	n.f.	= near face
@	= at	F	= fixed	No.	= number
ø	= diameter	f.f.	= front/air face	o.c.	= on center
±	= approximate	f'c	= specified concrete compressive strength	O.H.W.	= ordinary high water
Abut.	= abutment			pcf	= pounds per cubic foot
Approx.	= approximate	f'ci	= specified concrete compressive strength at release	psf	= pounds per square foot
b.f.	= back/dirt face			psi	= pounds per square inch
bot.	= bottom	Ft.	= feet	R	= radius
Br.	= bridge	Fy	= yield stress	ROW	= right of way
btwn.	= between	Galv.	= galvanize	RT.	= right
Brg.	= bearings	H.S.	= high strength	Rd.	= road
C.G.	= center of gravity	Hwy.	= highway	spcs.	= space, spaces
C.I.P.	= cast in place	ID	= internal diameter	Sta.	= station
CJP	= complete joint penetration	Int.	= interior	SF	= square feet
Clr.	= clear, clearance	Jt.	= joint	SY	= square yard
CMP	= corrugated metal pipe	K	= kips	Std.	= standard
CY	= cubic yard	ksf	= 1000 pounds per square foot	Symm.	= symmetric
Dia.	= diameter	ksi	= 1000 pounds per square inch	Typ.	= typical
Dwg.	= drawing	LBS or lb	= pounds	UT	= ultrasonic testing
E	= expansion	LF	= linear foot	V.P.C.	= point of vertical curve
(E)	= existing	LS	= lump sum	V.P.I.	= point of vertical intersection
EA	= each	L.T.	= left	V.P.T.	= point of vertical tangent
Elev.	= elevation	max.	= maximum	w/	= with

FOUNDATIONS REVIEWED BY: Dave Hemstreet

STATE OF ALASKA
DEPARTMENT OF TRANSPORTATION AND PUBLIC FACILITIES
BRIDGE SECTION
3132 Channel Drive
Juneau, Alaska 99801
907-465-2975

ROCK CREEK BRIDGE
DENALI HIGHWAY
SITE PLAN

BRIDGE NO. 684
DWG. NO. 2

Preliminary Plans

PLANS DEVELOPED BY: STATE OF ALASKA DEPARTMENT OF TRANSPORTATION & PUBLIC FACILITIES, NORTHERN REGION, 2301 PEGER ROAD, FAIRBANKS, AK 99709 (907)451-2200
R:\Projects\Denali_Hwy\00128_Rock_Creek_Brg\6 Design\4 CAD\1 Plots\00128_N-N2 Thu, Sep/03/20 03:24pm

NO.	DATE	REVISION

STATE	PROJECT DESIGNATION	YEAR	SHEET NO.	TOTAL SHEETS
ALASKA	0750015/NFHWY00128	2020	N3	N16

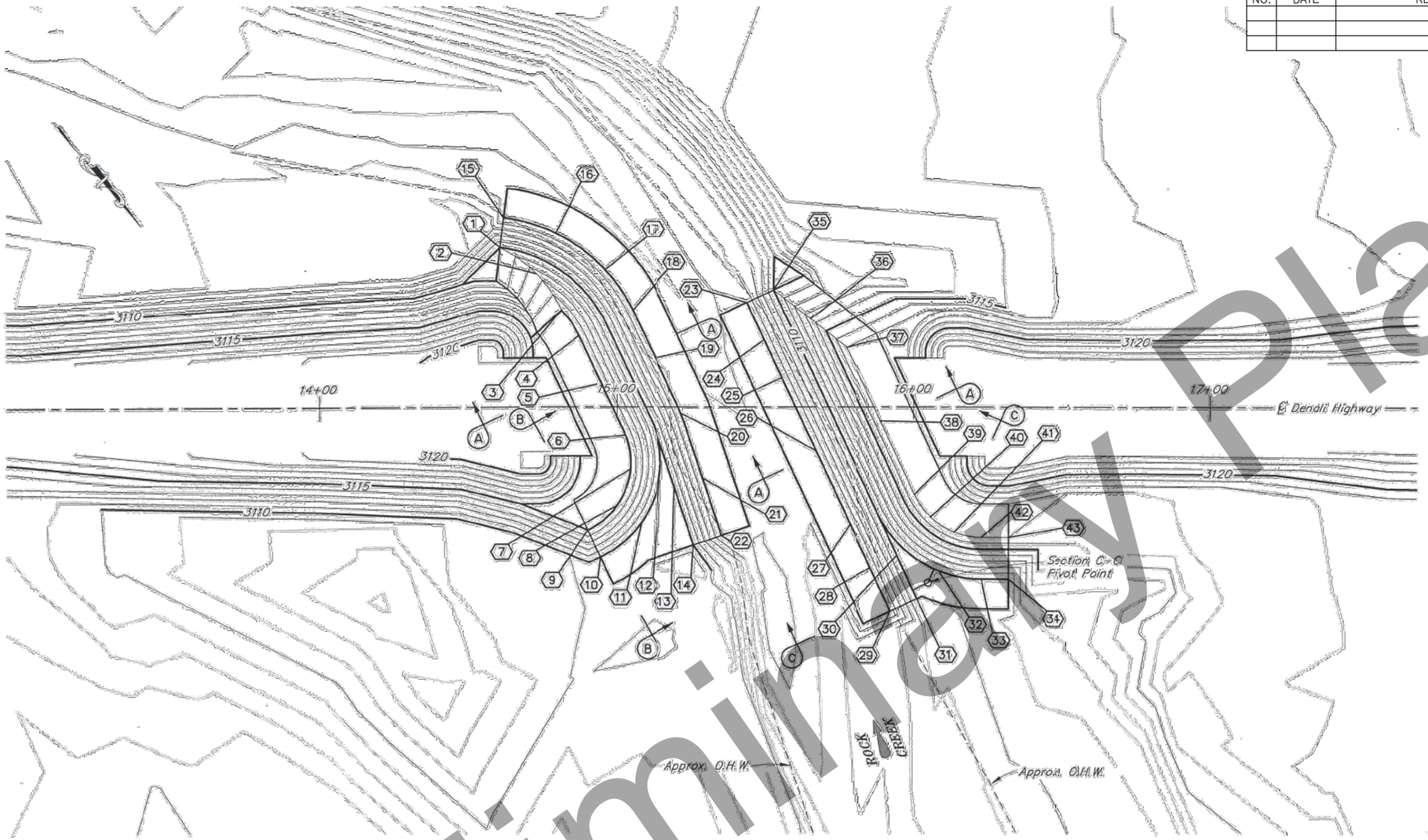

RIPRAP LAYOUT

10 0 20 40
Feet

RIPRAP TABLE			
POINT	STATION	OFFSET	ELEVATION
1	14+60.8	53.7' Left	3110.0
2	14+72.9	44.9' Left	3112.5
3	14+81.3	32.6' Left	3115.0
4	14+87.2	28.0' Left	3115.0
5	14+94.6	7.9' Left	3115.0
6	15+02.7	9.4' Right	3115.0
7	15+04.4	20.9' Right	3115.0
8	15+00.0	33.6' Right	3115.0
9	14+98.0	41.3' Right	3115.0
10	14+94.3	50.4' Right	3110.0
11	15+08.1	38.8' Right	3110.0
12	15+14.3	21.7' Right	3110.0
13	15+19.1	27.0' Right	3110.0
14	15+25.6	46.4' Right	3110.0
15	14+62.0	63.6' Left	3105.0
16	14+79.4	58.4' Left	3105.0
17	14+96.0	46.2' Left	3105.0
18	15+05.2	32.6' Left	3105.0
19	15+12.7	16.5' Left	3105.0
20	15+21.3	2.0' Right	3105.0
21	15+28.6	23.8' Right	3105.0
22	15+35.1	43.2' Right	3105.0
23	15+43.7	35.2' Left	3105.0
24	15+49.6	22.6' Left	3105.0
25	15+55.6	9.9' Left	3105.0
26	15+67.0	14.8' Right	3105.0
27	15+78.5	39.4' Right	3105.0
28	15+85.3	53.9' Right	3105.0
29	15+92.1	68.5' Right	3105.0
30	15+94.4	49.7' Right	3110.0
31	16+01.2	64.2' Right	3110.0
32	16+08.5	54.9' Right	3110.0
33	16+22.9	57.7' Right	3110.0
34	16+32.0	57.7' Right	3110.0
35	15+52.8	39.5' Left	3110.0
36	15+65.1	29.7' Left	3113.5
37	15+77.4	20.1' Left	3117.0
38	15+88.8	4.6' Right	3117.0
39	16+00.3	29.2' Right	3117.0
40	16+05.8	36.9' Right	3117.0
41	16+13.7	41.9' Right	3117.0
42	16+22.9	43.7' Right	3117.0
43	16+32.0	43.7' Right	3117.0

HYDRAULIC & HYDROLOGIC SUMMARY, BRIDGE NO. 684			
Flood Frequency (Yr.)	50	100	500
Exceedance Probability (%)	2	1	0.2
Discharge (cfs)	2,160	2,239	2,843
Water Surface Elevation (ft)	3110.7	3111.3	3112.5
Anticipated Add'l Backwater (ft)	0	0	0
Contraction Scour (ft)	2.4	2.8	3.6
Pier Scour (ft)		N/A	
Abutment Scour (ft)	3.5	3.9	4.8
Long-Term Degradation (ft)		2	

Drainage Area: 51.6 square miles
The hydraulic capacity is roughly 7,600 cfs in an ice-free channel condition.

NOTE:
See "RIPRAP DETAILS" Dwg. for "SECTION A-A", "SECTION B-B", "SECTION C-C" Details.

Preliminary Plans

STATE OF ALASKA
DEPARTMENT OF TRANSPORTATION AND PUBLIC FACILITIES
BRIDGE SECTION
3132 Channel Drive
Juneau, Alaska 99801
907-465-2975

ROCK CREEK BRIDGE
DENALI HIGHWAY
RIPRAP LAYOUT

BRIDGE NO. 684
DWG. NO. 3

PLANS DEVELOPED BY: STATE OF ALASKA DEPARTMENT OF TRANSPORTATION & PUBLIC FACILITIES, NORTHERN REGION, 2301 PEGER ROAD, FAIRBANKS, AK 99709 (907)451-2200
R:\Projects\Denali_Hwy\00128_Rock_Creek_Brdg\6 Design\4 CAD\1 Plots\00128_N-N3 Thu, Sep/03/20 03:24pm

NO.	DATE	REVISION

STATE	PROJECT DESIGNATION	YEAR	SHEET NO.	TOTAL SHEETS
ALASKA	0750015/NFHWY00128	2020	N4	N16

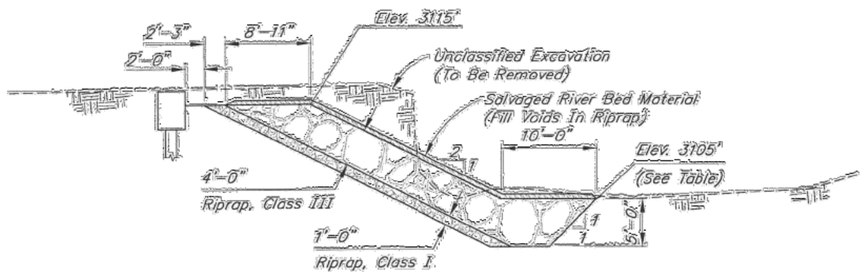

SECTION A-A - RIVER LEFT

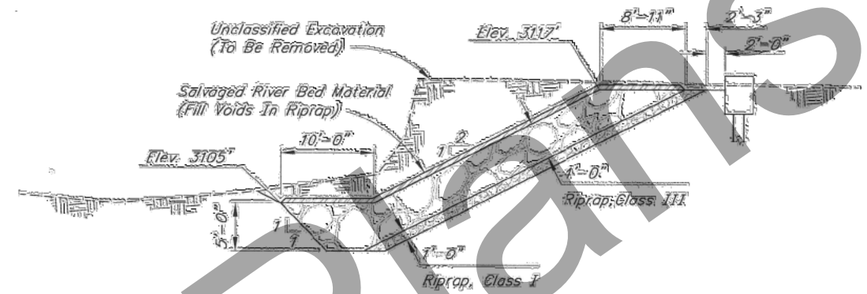

SECTION A-A - RIVER RIGHT

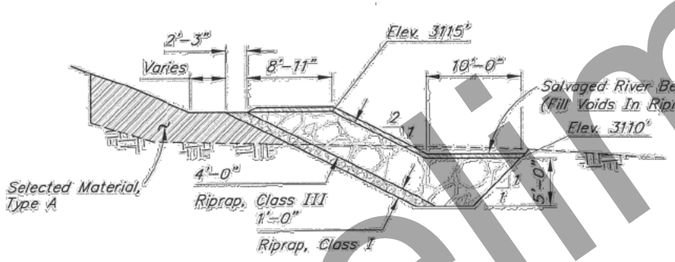

SECTION B-B

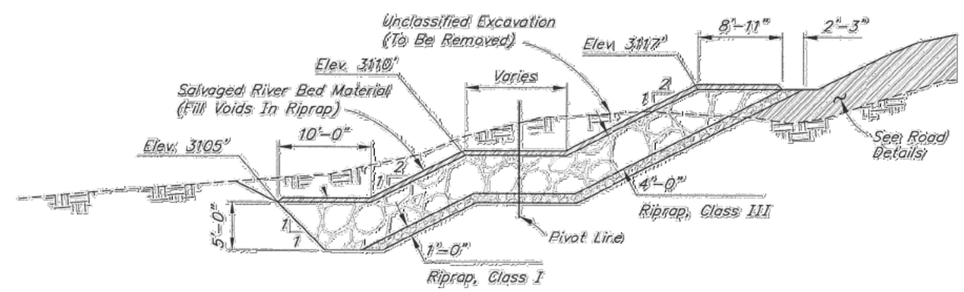

SECTION C-C

Preliminary Plans

STATE OF ALASKA
DEPARTMENT OF TRANSPORTATION
AND PUBLIC FACILITIES
BRIDGE SECTION
3132 Channel Drive
Juneau, Alaska 99801
907-465-2975

ROCK CREEK BRIDGE

DENALI HIGHWAY

RIPRAP DETAILS

BRIDGE NO. 684

D.W.G. NO. 4

PLANS DEVELOPED BY: STATE OF ALASKA DEPARTMENT OF TRANSPORTATION & PUBLIC FACILITIES, NORTHERN REGION, 2301 PEGER ROAD, FAIRBANKS, AK 99709 (907)451-2200
R:\Projects\Denali_Hwy\00128_Rock_Creek_Brg\6 Design\4 CAD\1 Plots\00128_N-N4 Thu, Sep/03/20 03:24pm

NO.	DATE	REVISION

STATE	PROJECT DESIGNATION	YEAR	SHEET NO.	TOTAL SHEETS
ALASKA	0750015/NFHWY00128	2020	N5	N16

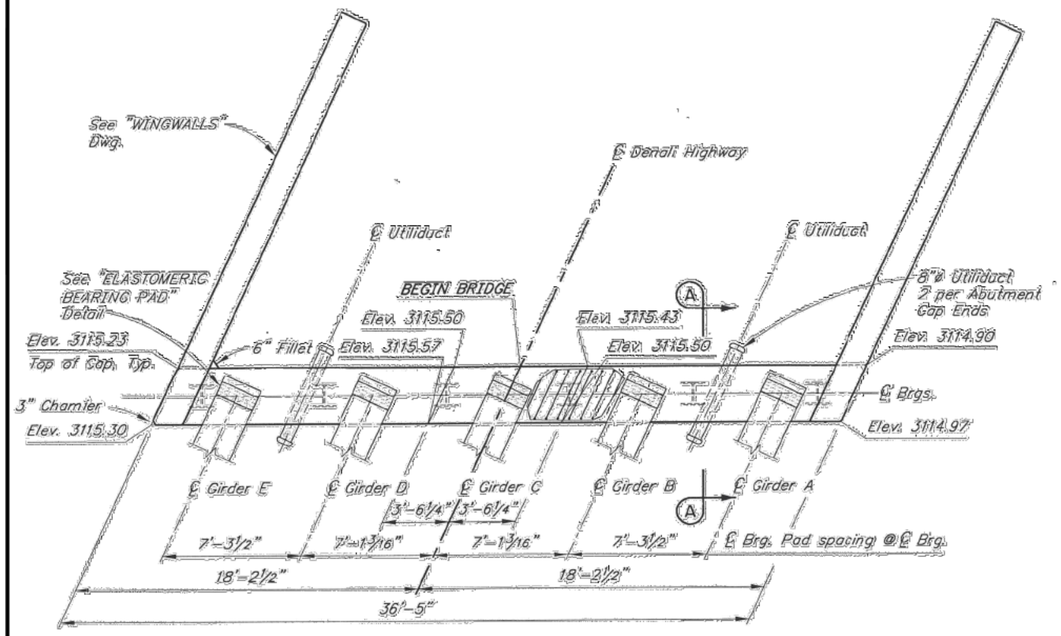

PLAN

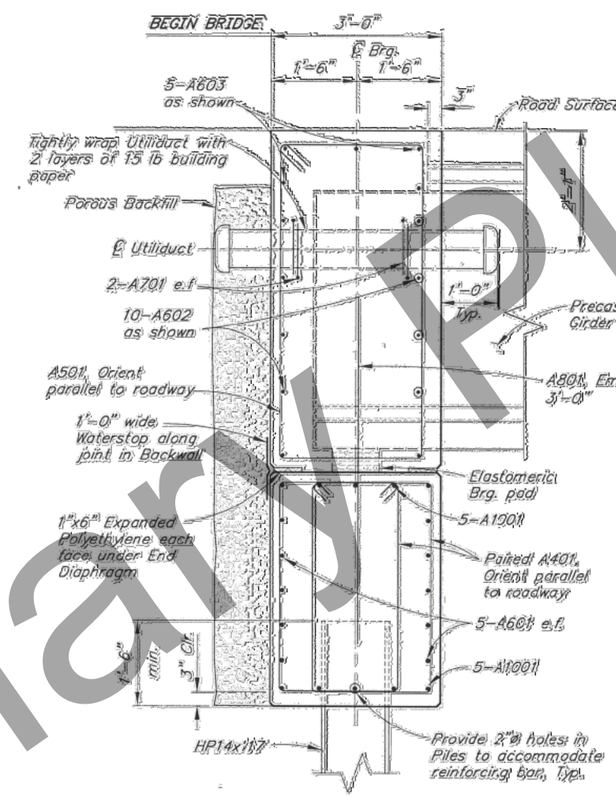

SECTION A-A

REINFORCING STEEL - ABUTMENT 1						
MARK	NOTE	SIZE	NO.	LENGTH	TYPE	BENDING DIAGRAM
A401		4	136	VARIES	STIRRUP	
A501	E	5	36	17'-3"	STIRRUP	
A601		6	10	36'-1"	—	
A602	E,M	6	10	32'-6"	—	
A603	E,M	6	5	36'-1"	—	
A701	E	7	8	3'-0"	BENT	
A801		8	20	6'-0"	—	
A1001	E,M	10	10	36'-1"	HEADED	

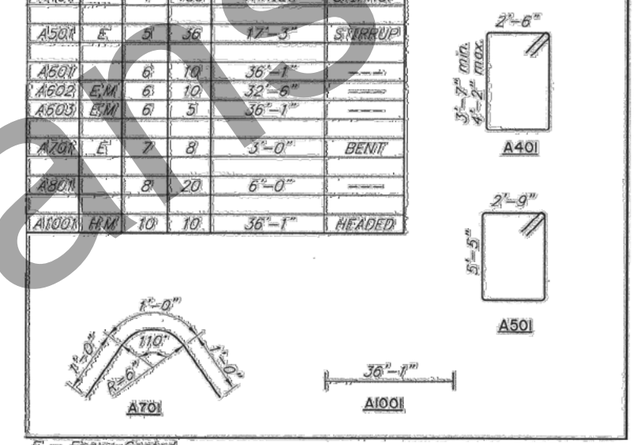

E = Epoxy-Coated
M = Headed reinforcing steel
M = Field adjust to match cross slope

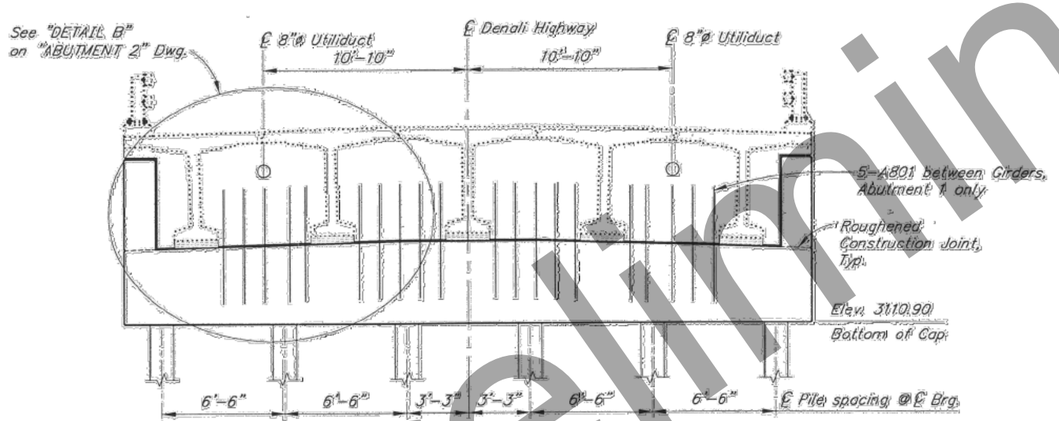

ELEVATION
(Looking back on Station)

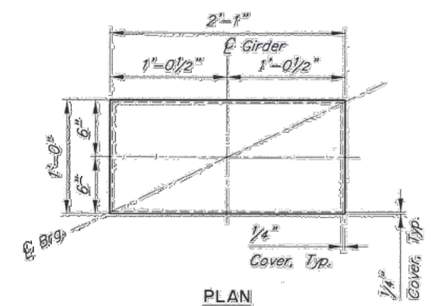

PLAN

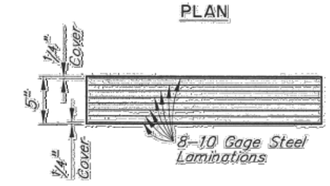

ELEVATION

ELASTOMERIC BEARING PAD

Grade 5
Max. Dead Load = 104 k
Max. Live Load = 84 k
Shear Modulus = 115 psi

STATE OF ALASKA
DEPARTMENT OF TRANSPORTATION AND PUBLIC FACILITIES
BRIDGE SECTION
3132 Channel Drive
Juneau, Alaska 99801
907-465-2975

ROCK CREEK BRIDGE
DENALI HIGHWAY
ABUTMENT 1

BRIDGE NO. 684
DWG. NO. 5

Preliminary Plans

PLANS DEVELOPED BY: STATE OF ALASKA DEPARTMENT OF TRANSPORTATION & PUBLIC FACILITIES, NORTHERN REGION, 2301 PEGER ROAD, FAIRBANKS, AK 99709 (907)451-2200
R:\Projects\Denali_Hwy\00128_Rock_Creek_Brdg\6 Design\4 CAD\1 Plots\00128_N-N5 Thu, Sep/03/20 03:24pm

NO.	DATE	REVISION

STATE	PROJECT DESIGNATION	YEAR	SHEET NO.	TOTAL SHEETS
ALASKA	0750015/NFHWY00128	2020	N6	N16

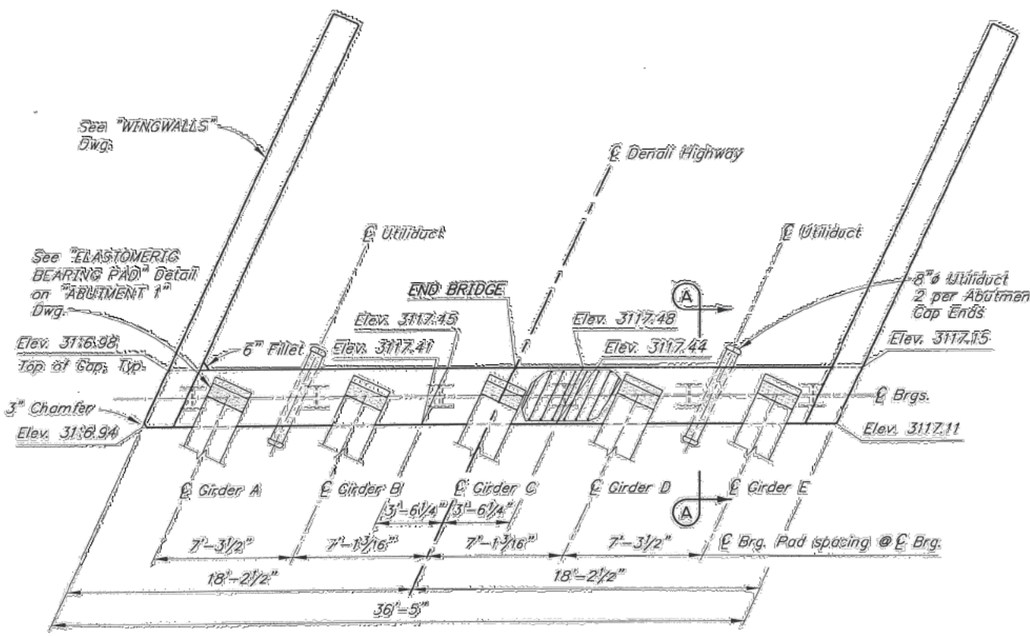

PLAN

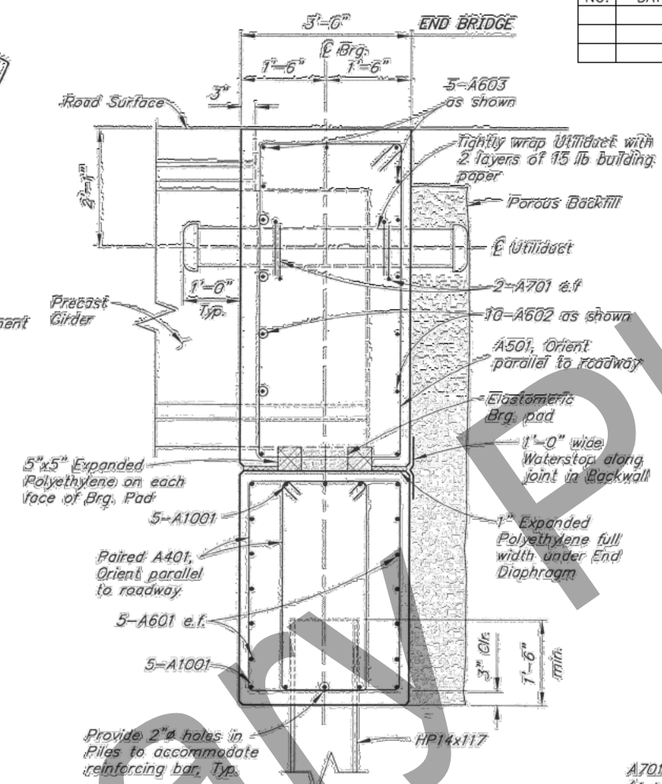

SECTION A-A

REINFORCING STEEL - ABUTMENT 2

MARK	NOTE	SIZE	NO.	LENGTH	TYPE	BENDING DIAGRAM
A401		4	136	VARIES	STIRRUP	A401 (2'-6", 3'-7" min., 4'-1" max.)
A501	E	5	36	17'-3"	STIRRUP	A501 (2'-9", 5'-5")
A601		6	10	36'-1"	—	
A602	E,M	6	10	32'-6"	—	
A603	E,M	6	5	36'-1"	—	
A701	E	7	8	3'-0"	BENT	A701 (1'-0", 1'-0", 1'-0", 110°, R=6")
A1001	H,M	10	10	36'-1"	HEADED	A1001 (36'-1")

E – Epoxy-Coated
H – Headed reinforcing steel
M – Field adjust to match cross slope

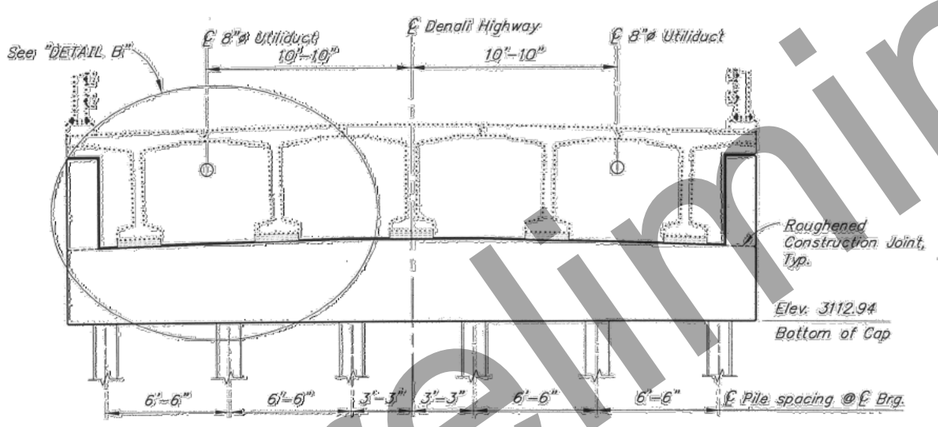

ELEVATION

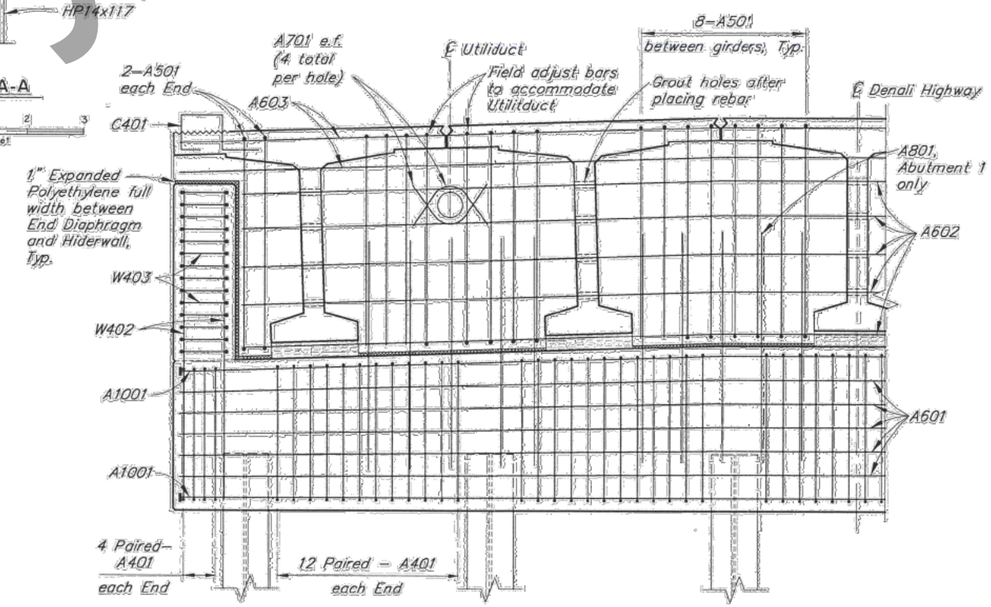

DETAIL B

Preliminary Plans

STATE OF ALASKA
DEPARTMENT OF TRANSPORTATION AND PUBLIC FACILITIES
BRIDGE SECTION
3132 Channel Drive
Juneau, Alaska 99801
907-465-2975

ROCK CREEK BRIDGE
DENALI HIGHWAY
ABUTMENT 2

BRIDGE NO. 684
DWG. NO. 6

PLANS DEVELOPED BY: STATE OF ALASKA DEPARTMENT OF TRANSPORTATION & PUBLIC FACILITIES, NORTHERN REGION, 2301 PEGER ROAD, FAIRBANKS, AK 99709 (907)451-2200
R:\Projects\Denali_Hwy\00128_Rock_Creek_Brdg\6 Design\4 CAD\1 Plots\00128_N-N6 Thu, Sep/03/20 03:24pm

NO.	DATE	REVISION

STATE	PROJECT DESIGNATION	YEAR	SHEET NO.	TOTAL SHEETS
ALASKA	0750015/NFHWY00128	2020	N7	N16

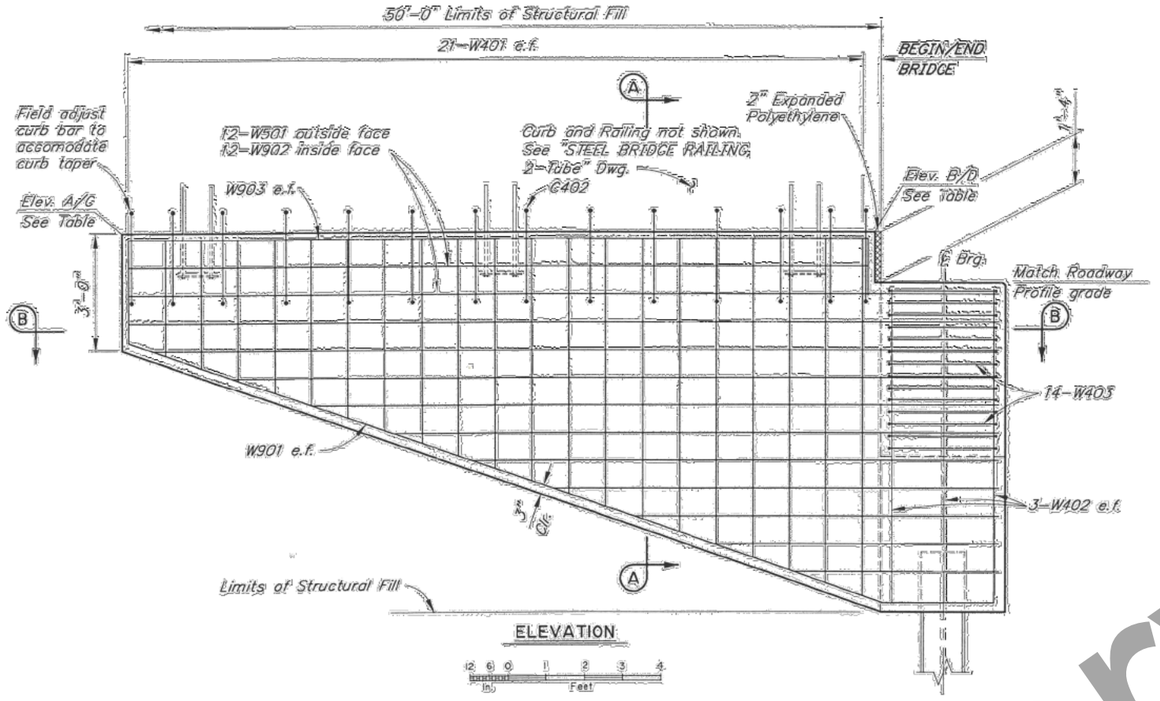

ELEVATION

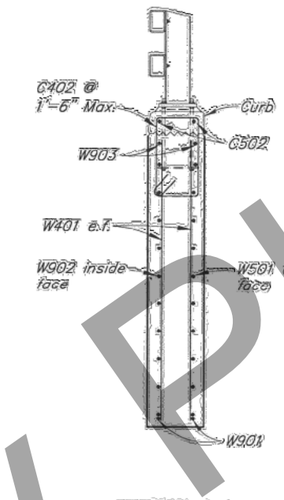

SECTION A-A

REINFORCING STEEL - ONE ABUTMENT

MARK	NOTE	SIZE	NO.	LENGTH	TYPE	BENDING DIAGRAM
W401		4	84	VARIES	---	
W402		4	12	VARIES	---	
W403		4	28	9'-1"	STIRRUP	
W501		5	24	VARIES	---	
W901		9	4	VARIES	BENT	
W902		9	24	VARIES	---	
W903		9	4	VARIES	BENT	
C402	E	4	28	7'-5"	STIRRUP	
C502	E	5	4	VARIES	---	

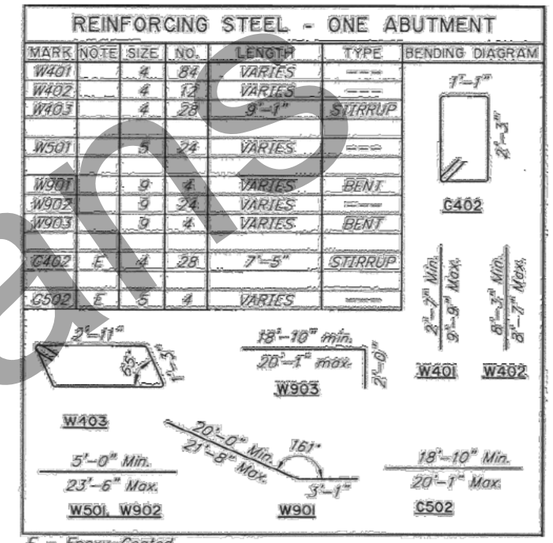

E - Epoxy-Coated

TOP OF WINGWALL ELEVATION TABLE (FT)

LOCATION	A DOWNSTREAM	B DOWNSTREAM	C UPSTREAM	D UPSTREAM
ABUTMENT 1	3120.51	3120.96	3120.83	3121.26
ABUTMENT 2	3123.25	3123.04	3123.38	3123.19

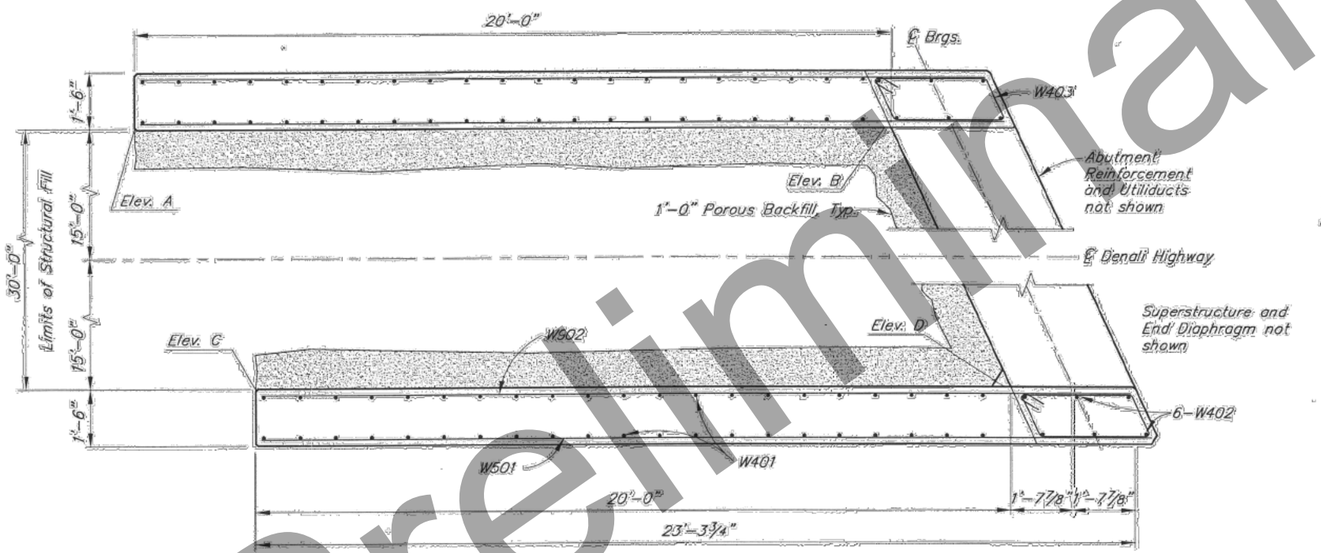

SECTION B-B

(Abutment 1 shown, Abutment 2 similar)

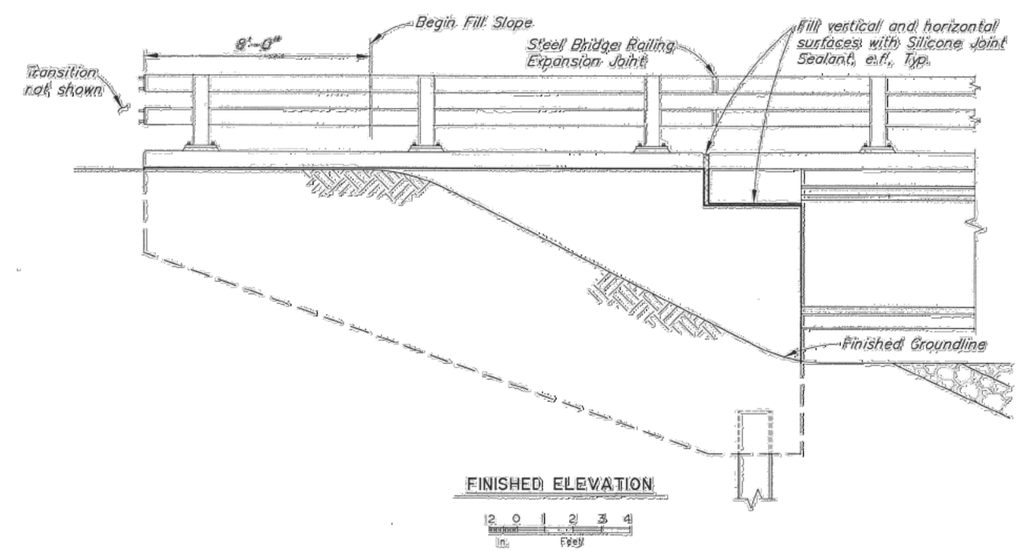

FINISHED ELEVATION

STATE OF ALASKA
DEPARTMENT OF TRANSPORTATION AND PUBLIC FACILITIES
BRIDGE SECTION
3132 Channel Drive
Juneau, Alaska 99801
907-465-2975

ROCK CREEK BRIDGE

DENALI HIGHWAY

WINGWALLS

BRIDGE NO. 684

DWG. NO. 7

Preliminary Plans

PLANS DEVELOPED BY: STATE OF ALASKA DEPARTMENT OF TRANSPORTATION & PUBLIC FACILITIES, NORTHERN REGION, 2301 PEGER ROAD, FAIRBANKS, AK 99709 (907)451-2200
R:\Projects\Denali_Hwy\00128_Rock_Creek_Brdg\6 Design\4 CAD\1 Plots\00128_N-N7 Thu, Sep/03/20 03:24pm

NO.	DATE	REVISION

STATE	PROJECT DESIGNATION	YEAR	SHEET NO.	TOTAL SHEETS
ALASKA	0750015/NFHWY00128	2020	N8	N16

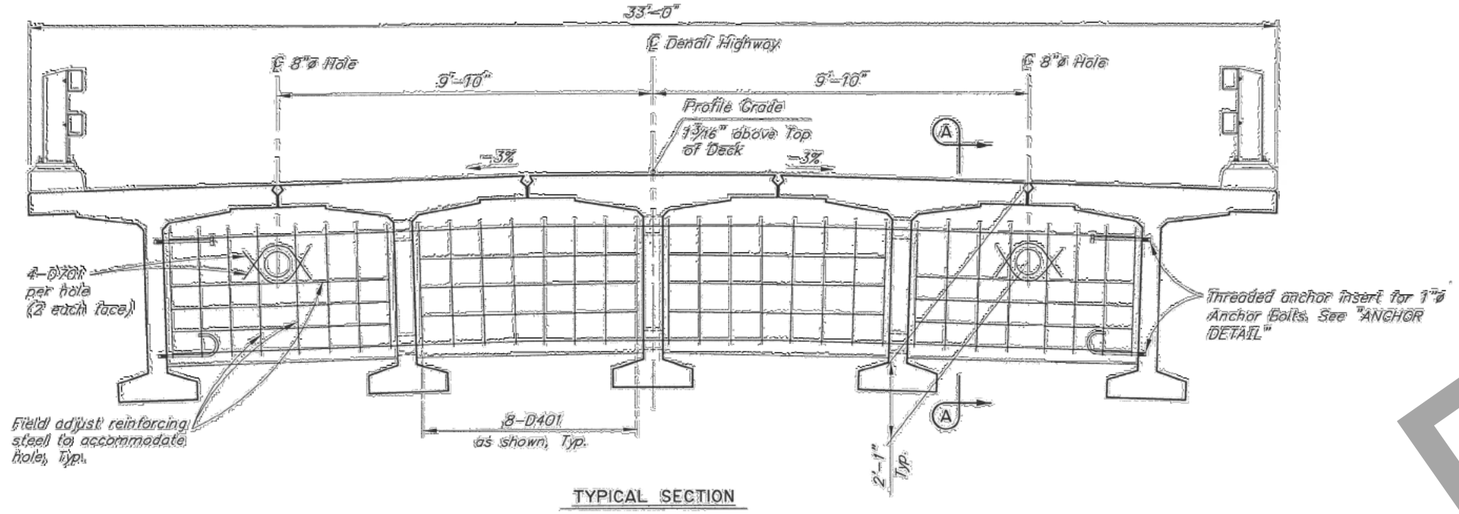

TYPICAL SECTION

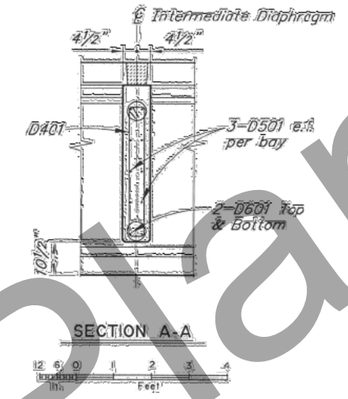

SECTION A-A

REINFORCING STEEL - ONE DIAPHRAGM					
MARK	NOTE	SIZE	NO.	LENGTH	TYPE
D401	E	4	32	8'-1"	STIRRUP
D501	E	5	24	6'-3"	—
D601	E,M	6	4	28'-0"	—
D701	E	7	8	3'-0"	BENT

BENDING DIAGRAM

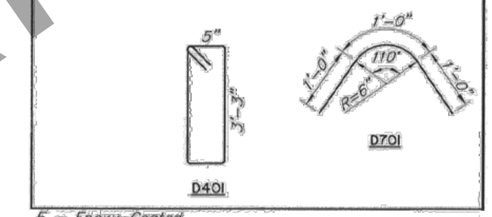

E - Epoxy-Coated
M - Field adjust to match crown

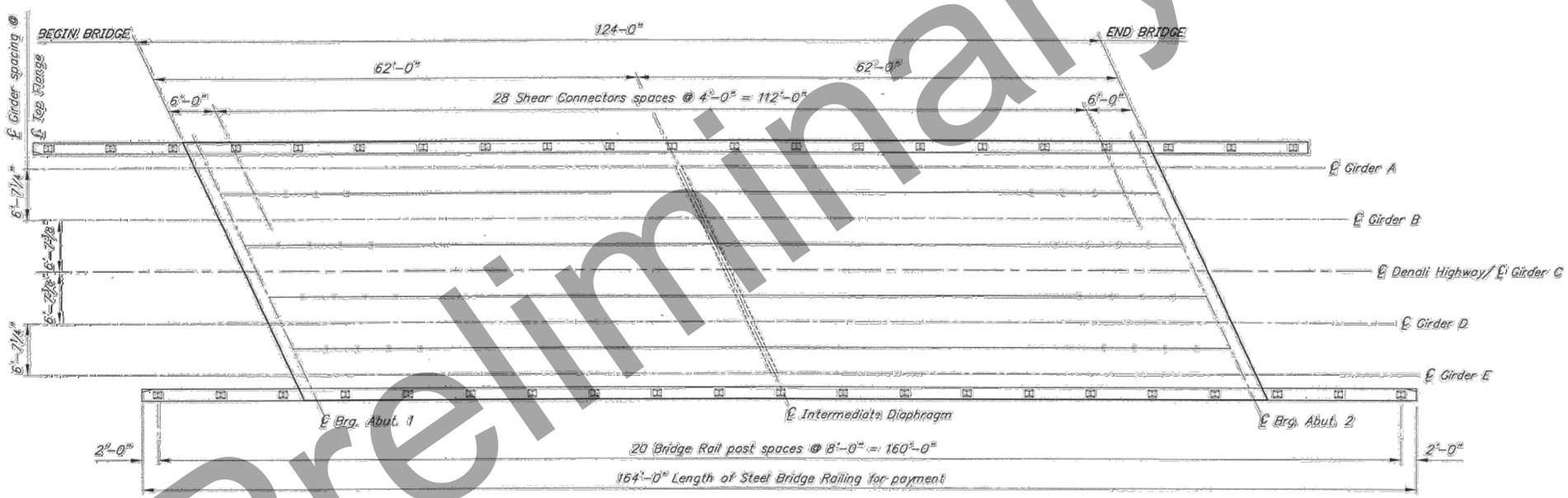

FRAMING PLAN

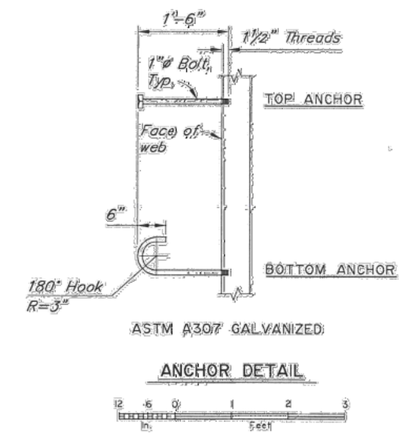

ANCHOR DETAIL

STATE OF ALASKA
DEPARTMENT OF TRANSPORTATION AND PUBLIC FACILITIES
BRIDGE SECTION
3132 Channel Drive
Juneau, Alaska 99801
907-465-2975

ROCK CREEK BRIDGE

DENALI HIGHWAY

FRAMING PLAN AND TYPICAL SECTION

BRIDGE NO. 684
DWG. NO. 8

Preliminary Plans

PLANS DEVELOPED BY: STATE OF ALASKA DEPARTMENT OF TRANSPORTATION & PUBLIC FACILITIES, NORTHERN REGION, 2301 PEGER ROAD, FAIRBANKS, AK 99709 (907)451-2200
R:\Projects\Denali_Hwy\00128_Rock_Creek_Brg\6 Design\4 CAD\1 Plots\00128_N-N8 Thu, Sep/03/20 03:24pm

NO.	DATE	REVISION

STATE	PROJECT DESIGNATION	YEAR	SHEET NO.	TOTAL SHEETS
ALASKA	0750015/NFHWY00128	2020	N9	N16

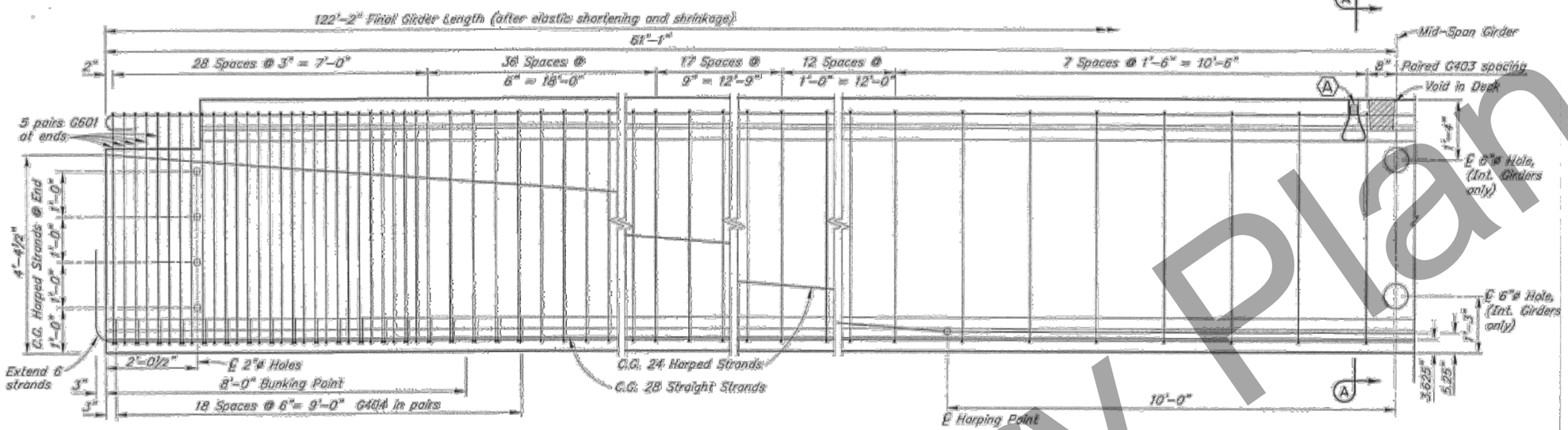

ELEVATION

REINFORCING STEEL-ONE GIRDER

MARK	NOTE	SIZE	NO.	LENGTH	TYPE
G401	E	4	223	VARIES	BENT
G401X	E	4	264	VARIES	BENT
G402	E,S	4	10	117'-9"	— — —
G402X	E	4	12	117'-9"	— — —
G403	E	4	384	6'-8"	BENT
G404	E	4	76	3'-3"	BENT
G501	E	5	223	VARIES	— — —
G501X	E	5	264	VARIES	BENT
G502	E,S	5	10	123'-4"	BENT
G502X	E,S	5	12	123'-4"	BENT
G601	E	6	20	6'-8"	BENT
C401	E,L,X	4	94	4'-5"	BENT
C501	E,S,X	5	2	123'-8"	— — —

BENDING DIAGRAM

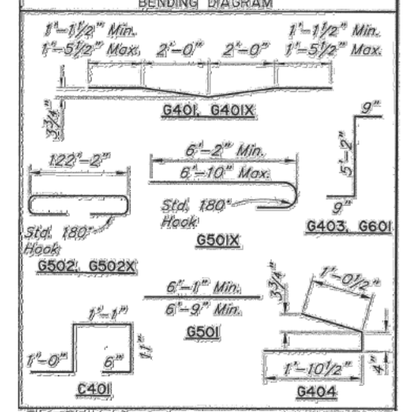

E = Epoxy-Coated
L = Ship 4 loose for diaphragm
S = Length does not include splices. Minimum lap splice length for splice: 2'-0" for #4 bars, 2'-6" for #5 bars.
X = Exterior Girders only

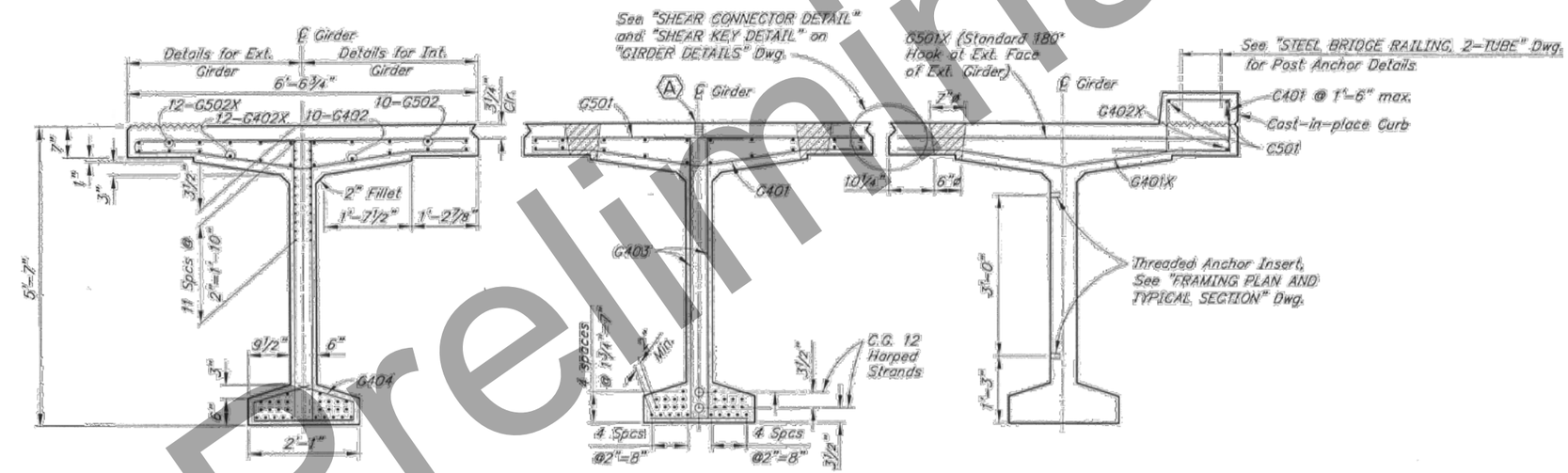

END VIEW

SECTION A-A

EXTERIOR GIRDER NEAR MID SPAN
(Unrelated Reinforcement not shown)

GIRDER NOTES

Class P Concrete: at Stress Transfer.....f'ci = 6,500 psi
at 28 Days.....f'c = 7,500 psi

½"ø low-relaxation prestressing strands with an ultimate strength of 270 ksi and a cross sectional area of 0.153 in².

Steel stresses: Pretensioning — Jacking Stress 189 ksi
After initial losses 172 ksi
After all losses 142 ksi

One inch clear cover on reinforcing steel unless otherwise noted.

See "FRAMING PLAN AND TYPICAL SECTION" Dwg. for Shear Connector spacing.

Deflect forms to compensate for camber and roadway profile grade.

Galvanize structural steel embedded in girders except for shear connectors.

Omit Shear Key, Shear Key Connector and Deck Void in exterior face of exterior girders.

Cast ends of girders plumb with respect to roadway grade. Install web holes and web anchor inserts parallel to ℄ bearing.

Finish top flange with heavy broom. Roughen the surface under the Curb.

(A) 1"X1'-0" Coil Anchor Insert for vertical adjustment of girders. Recess 2". Prevent concrete from filling hole.

STATE OF ALASKA
DEPARTMENT OF TRANSPORTATION AND PUBLIC FACILITIES
BRIDGE SECTION
3132 Channel Drive
Juneau, Alaska 99801
907-465-2975

ROCK CREEK BRIDGE

DENALI HIGHWAY

GIRDERS

BRIDGE NO. 684

DWG. NO. 9

Preliminary Plans

PLANS DEVELOPED BY: STATE OF ALASKA DEPARTMENT OF TRANSPORTATION & PUBLIC FACILITIES, NORTHERN REGION, 2301 PEGER ROAD, FAIRBANKS, AK 99709 (907)451-2200
R:\Projects\Denali_Hwy\00128_Rock_Creek_Brdg\6 Design\4 CADD\1 Plots\00128_N-N9 Thu, Sep/03/20 03:24pm

NO.	DATE	REVISION

STATE	PROJECT DESIGNATION	YEAR	SHEET NO.	TOTAL SHEETS
ALASKA	0750015/NFHWY00128	2020	N10	N16

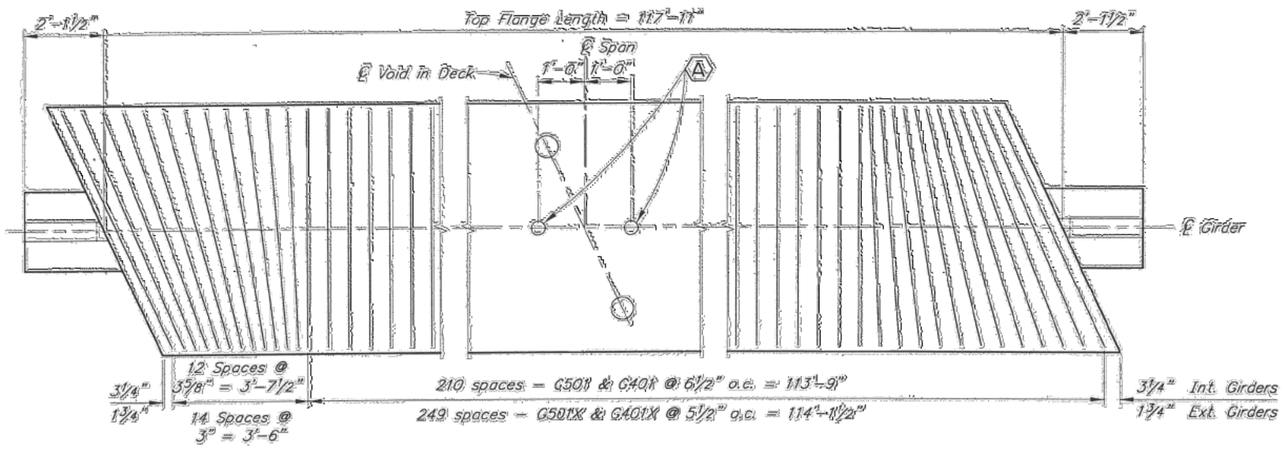

PLAN

(No Scale)

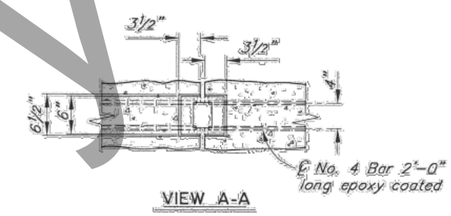

VIEW A-A

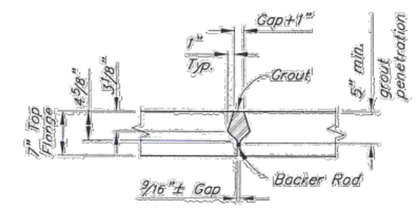

SHEAR KEY DETAIL

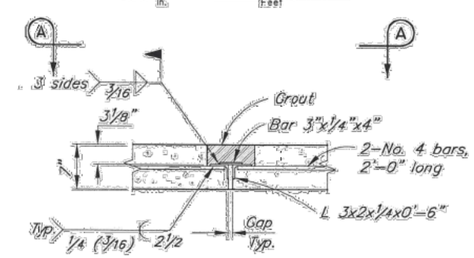

SHEAR CONNECTOR DETAIL

Preliminary Plans

STATE OF ALASKA
DEPARTMENT OF TRANSPORTATION
AND PUBLIC FACILITIES
BRIDGE SECTION
3132 Channel Drive
Juneau, Alaska 99801
907-465-2975

ROCK CREEK BRIDGE

DENALI HIGHWAY

GIRDER DETAILS

BRIDGE NO. 684

DWG. NO. 10

PLANS DEVELOPED BY: STATE OF ALASKA DEPARTMENT OF TRANSPORTATION & PUBLIC FACILITIES, NORTHERN REGION, 2301 PEGER ROAD, FAIRBANKS, AK 99709 (907)451-2200
R:\Projects\Denali_Hwy\00128_Rock_Creek_Brdg\6 Design\4 CAD\1 Plots\00128_N-N10 Thu, Sep/03/20 03:24pm

NO.	DATE	REVISION

STATE	PROJECT DESIGNATION	YEAR	SHEET NO.	TOTAL SHEETS
ALASKA	0750015/NFHWY00128	2020	N11	N16

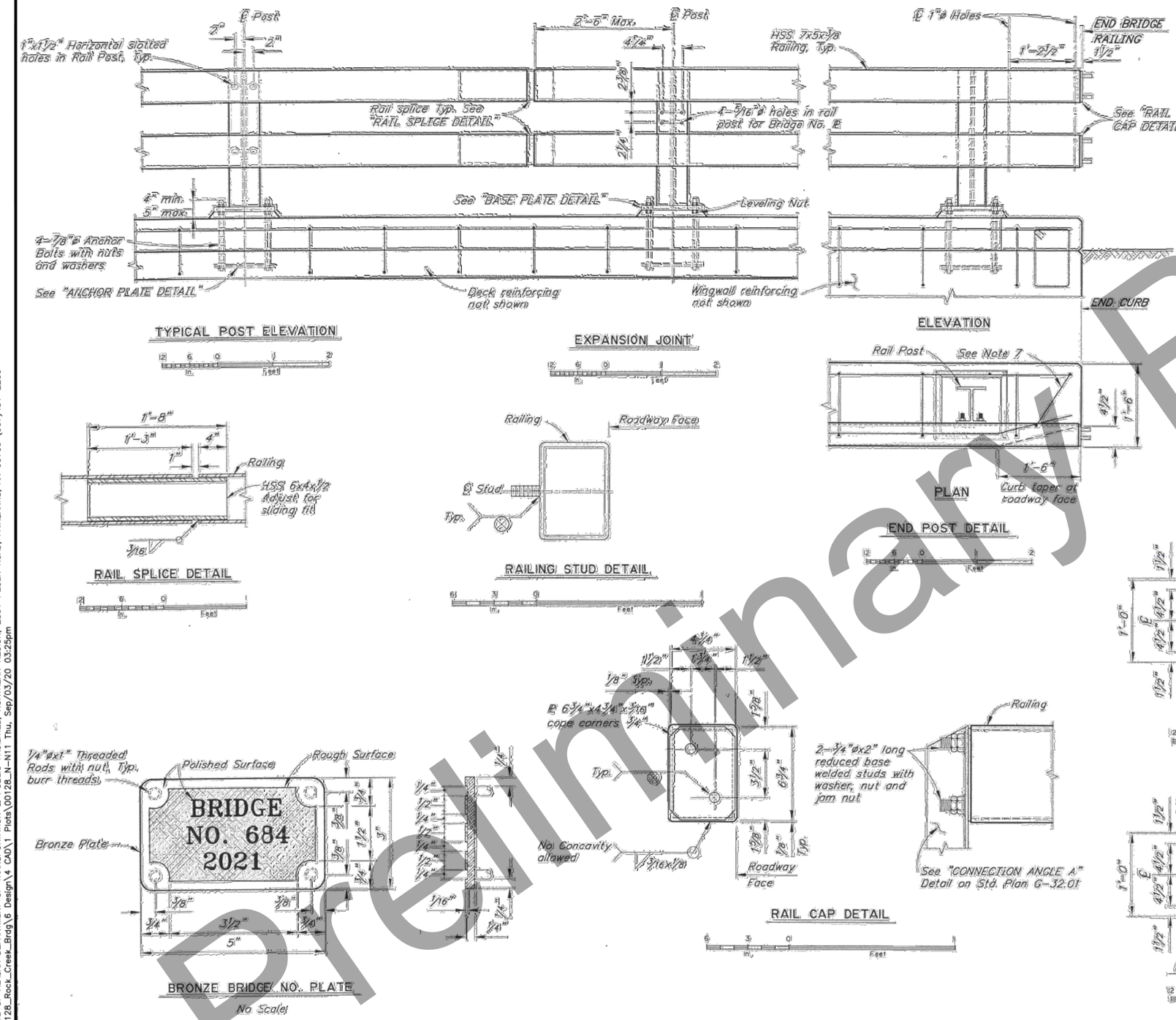

NOTES:

1. Locate bridge number plates on right hand side of approaching traffic near each end as shown on "GENERAL LAYOUT" Dwg. (2 total).
2. Furnish bridge number plates. Use "Century" type style lettering. Use studs and nuts that conform to UNS C65100 or C65500. Braze ¼"ø threaded rod to back of plate with nut — 4 required. Use tamper proof nuts.
3. Provide railing expansion joints at 50'-0" maximum intervals. Railing shall be continuous over 2 posts minimum. Railing expansion joints are required in rail panels that span bridge expansion joints.
4. Use grout with a minimum 24-hour f'c of 3,000 psi in single placement.
5. See "FRAMING PLAN AND TYPICAL SECTION" Dwg. for rail post spacing.
6. Install bridge rail posts plumb.
7. Adjust reinforcing to accommodate curb taper.
8. See Std. Plan G-32.01 for "MASH BRIDGE RAIL THRIE BEAM TRANSITION" Dwg.

Preliminary Plans

STATE OF ALASKA
DEPARTMENT OF TRANSPORTATION AND PUBLIC FACILITIES
BRIDGE SECTION
3132 Channel Drive
Juneau, Alaska 99801
907-465-2975

ROCK CREEK BRIDGE

DENALI HIGHWAY

STEEL BRIDGE RAILING, 2-TUBE

BRIDGE NO. 684

DWG. NO. 11

PLANS DEVELOPED BY: STATE OF ALASKA DEPARTMENT OF TRANSPORTATION & PUBLIC FACILITIES, NORTHERN REGION, 2301 PEGER ROAD, FAIRBANKS, AK 99709 (907)451-2200
R:\Projects\Denali_Hwy\00128_Rock_Creek_Brdg\6 Design\4 CAD\1 Plots\00128_N-N11 Thu, Sep/03/20 03:25pm

NO.	DATE	REVISION

STATE	PROJECT DESIGNATION	YEAR	SHEET NO.	TOTAL SHEETS
ALASKA	0750015/NFHWY00128	2020	N12	N16

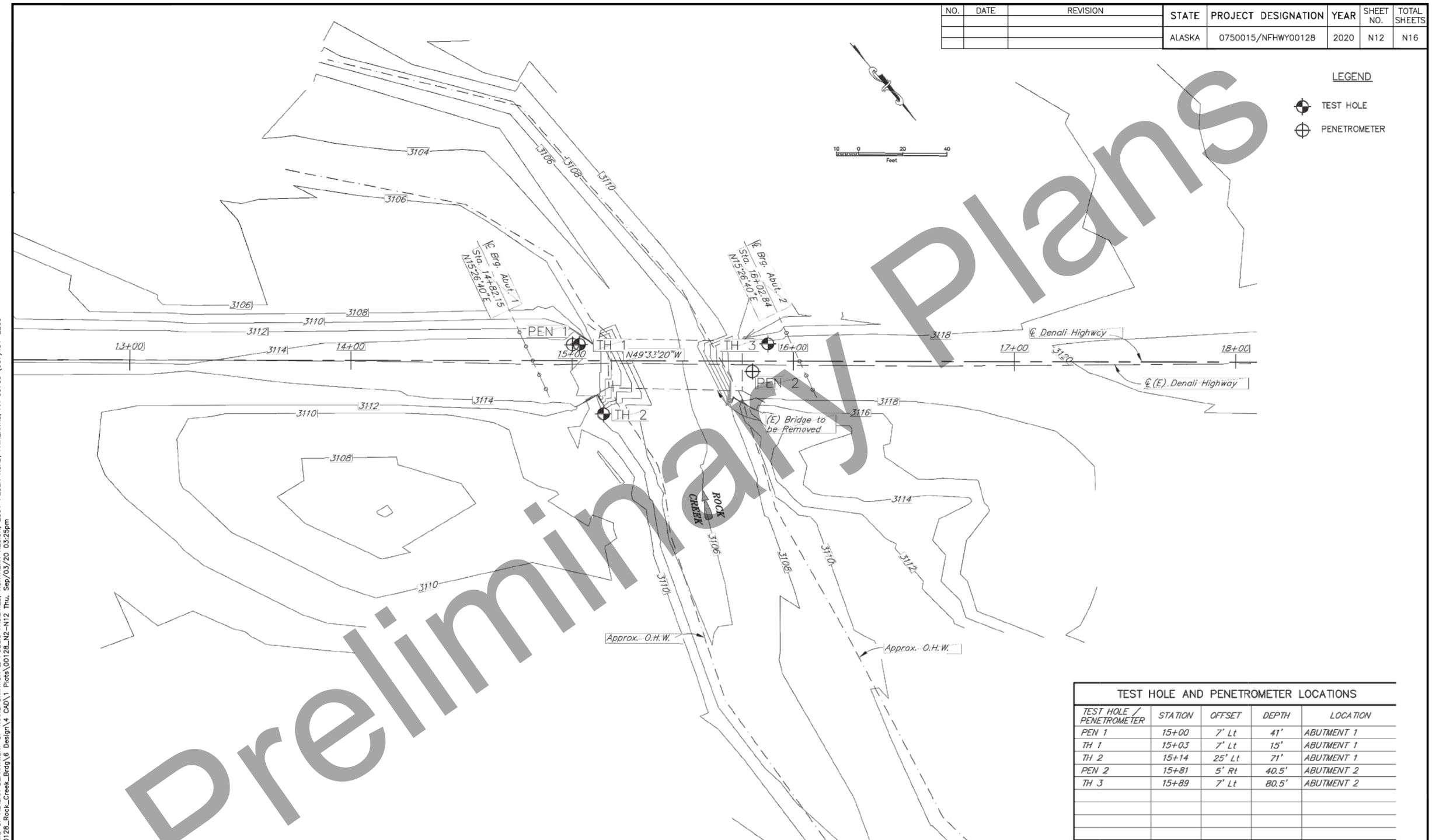

Preliminary Plans

TEST HOLE AND PENETROMETER LOCATIONS

TEST HOLE / PENETROMETER	STATION	OFFSET	DEPTH	LOCATION
PEN 1	15+00	7' Lt	41'	ABUTMENT 1
TH 1	15+03	7' Lt	15'	ABUTMENT 1
TH 2	15+14	25' Lt	71'	ABUTMENT 1
PEN 2	15+81	5' Rt	40.5'	ABUTMENT 2
TH 3	15+89	7' Lt	80.5'	ABUTMENT 2

DESIGNED BY: D. Hemstreet	CHECKED: Engineer		
DRAWN BY: R. Angell	CHECKED: J. Nicolazzo		
QUANTITIES BY: Engineer	CHECKED: Engineer		

STATE OF ALASKA
DEPARTMENT OF TRANSPORTATION AND PUBLIC FACILITIES
STATEWIDE MATERIALS

ROCK CREEK BRIDGE

DENALI HIGHWAY MP 25

TEST HOLE & PENETROMETER LOCATION

BRIDGE NO. 0684
DWG. NO. 12

PLANS DEVELOPED BY: STATE OF ALASKA DEPARTMENT OF TRANSPORTATION & PUBLIC FACILITIES, NORTHERN REGION, 2301 PEGER ROAD, FAIRBANKS, AK 99709 (907)451-2200
R:\Projects\Denali_Hwy\00128_Rock_Creek_Brg\6 Design\4 CAD\1 Plots\00128_N2-N12 Thu, Sep/03/20 03:25pm

NO.	DATE	REVISION

STATE	PROJECT DESIGNATION	YEAR	SHEET NO.	TOTAL SHEETS
ALASKA	0750015/NFHWY00128	2020	N13	N16

TYPICAL TEST HOLE LOG

DATE: Date begun – Date completed
STATION / OFFSET: XX+XX FEET RT or LT

Hole diameter 3.5 in

Elevation(ft) 100, 95, 90, 85, 80, 75, 70, 65, 60, 55, 50, 45, 40, 35, 30

Depth(ft)

Frozen

Graphic materials description
Stratum contact — 5.0ft
Estimated stratum contact
Transitional stratum change

Observed Ground Water Date: xx/xx/xx

Soil graphic and soil type explanation

GRAVEL (GP)
GRAVEL (GW)
SAND (SP)
SAND (SW)
SILT (ML)
SILT (MH)
CLAY (CL)
CLAY (CH)
ORGANICS OR PEAT (PT)
COBBLE OR BOULDER INDICATED BY DRILL REACTION OR CORE
ICE
WEATHERED BEDROCK (Strength Grade, Weathering Grade)
BEDROCK (Strength Grade, Weathering Grade)
COAL

SILTY GRAVEL (GM)
CLAYEY GRAVEL (GC)
SILTY SAND (SM)
CLAYEY SAND (SC)
ORGANIC SILTS (OL)
ORGANIC CLAYS (OH)

Drilling Method

RQD % = Sum of lengths of core pieces > 4" / total length of run
L = Longest length of core in run
S = Shortest lkength of core in run — 32.0ft

SAND with Silt ← USCS soil name
p200 = 8% ← % passing the #200 (0.075mm) sieve
Sa=42% ← % sand, retained on #200 (0.075mm) sieve and passing #4 (4.75mm) sieve
Gr=50% ← % gravel, retained on #4 (4.75mm) sieve
Moisture=5.0% ← moisture content
Org=10% ← organic content
PI=8 ← plasticity index
LL=18 ← liquid limit
SM ← USCS classification
PP=2.0 ← pocket penetrometer (ton / SF)
TV=2.0 ← torvane (ton / SF)

GRAPHICS: (double symbols with split graphics may be used to indicate combinations of soil types) — 48.0ft

07–3533 = soil sample number (year – sample number)
SNT = Sample Not Tested

Interval sampled with recovery shaded — 10

SPT = blow count / ft. (total blows for second and third 6" increment) with standard penetration test sampler w/ 1.4 ID, 2" O.D. using a CME autohammer with 140 lb. hammer and a 30" freefall latest edition AASHTO T 206 (ASTM D1586).

SPT_{60} = same as SPT except, instead of CME autohammer, using a cathead/rope.

SPT_{60}' = SPT sampler driven by 340 lb. hammer with a 30" freefall, using a cathead/rope.

CORE — Indicates no valid SPT

GS — Grab sample from drill cuttings or directly from hole sidewall

CS — Continuous sampler

* — Indicates sampler refusal. Refusal defined as 50 or more blows per 6" increment, 100 total blows, or no movement observed with 10 successive blows.

VS — Vane shear test, undrained shear strength, PSF

ST — Thin walled sampler, pushed

Bottom of hole (BOH) — 70.0ft — Total depth

NOTES:

1) The test hole logs depicted graphically in these drawings are distillations of the original field logs, based on post–field investigation review and analysis. These drafted logs include changes made to field descriptions based upon laboratory test data, review and analysis. Detailed field observations of rock and soil sampled during the drilling program are not reproduced in the drafted logs.
2) Description of soils follows Alaska Geotechnical Procedures manual. Classification of soils follows Unified Soil Classification System (ASTM D2487).
3) The test hole logs from these sheets are an integral part of the Foundation Geology Report. See Construction Contract Bid Documents – invitation to bid/notice to bidders. Important information about the test hole logs and the foundation investigation is contained in the report. The test hole logs are not severable from and cannot be completely and correctly interpreted without reference to the Foundation Geology Report.

TYPICAL PENETROMETER TEST LOG

DATE: Date begun – Date completed
STATION / OFFSET: XX+XX / RT or LT (feet)

BLOWS / FOOT: 0, 100, 200, 300, 400, 500, 600, 700, 800, 900, 1000

Hole diameter 2.5 in.

Ground Elevation at test hole and Depth in feet
Blow count

Practical refusal with penetrometer test

Bottom of hole (BOH)

NOTES:
Penetrometer W/2.5" O.D., with a CME AUTOMATIC Hammer using a 340 lb. weight and a 30" freefall

Preliminary Plans

DESIGNED BY: D. Hemstreet	CHECKED: Engineer		
DRAWN BY: R. Angell	CHECKED: J. Nicolazzo		
QUANTITIES BY: Engineer	CHECKED: Engineer		

STATE OF ALASKA
DEPARTMENT OF TRANSPORTATION AND PUBLIC FACILITIES
STATEWIDE MATERIALS

ROCK CREEK BRIDGE

DENALI HIGHWAY MP 25

TEST HOLE & PENETROMETER LEGEND

BRIDGE NO. 0684
DWG. NO. 13

PLANS DEVELOPED BY: STATE OF ALASKA DEPARTMENT OF TRANSPORTATION & PUBLIC FACILITIES, NORTHERN REGION, 2301 PEGER ROAD, FAIRBANKS, AK 99709 (907)451-2200
R:\Projects\Denali_Hwy\00128_Rock_Creek_Brg\6 Design\4 CAD\1 Plots\00128_N2-N13 Thu, Sep/03/20 03:25pm

NO.	DATE	REVISION

STATE	PROJECT DESIGNATION	YEAR	SHEET NO.	TOTAL SHEETS
ALASKA	0750015/NFHWY00128	2020	N14	N16

PEN 1
Date: 9/14/94 – 9/14/94
Station: 15+00 Offset: 7' LT

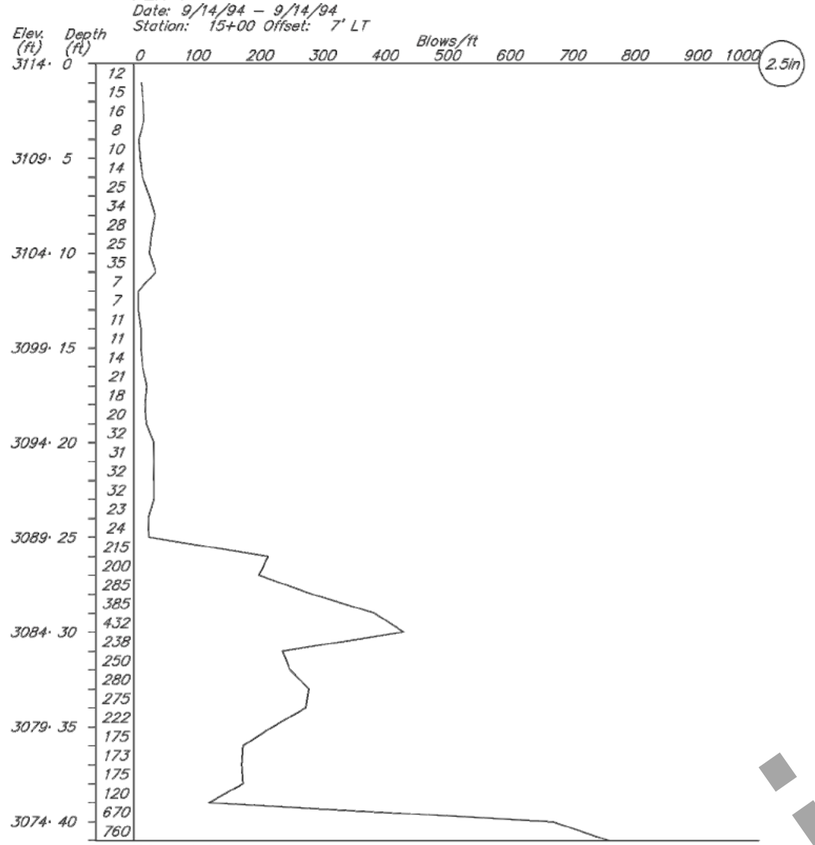

BOH: 41 ft
Notes: Pullout break force immediately after driving was at least 28,280 lbs.
Hammer: CME Auto Hammer 340 lb hammer
Equipment: CME 75 Truck
Geologist: K.T. Hemenway

TH 1
Date: 9/15/94 – 9/15/94
Station: 15+03 Offset: 7' LT

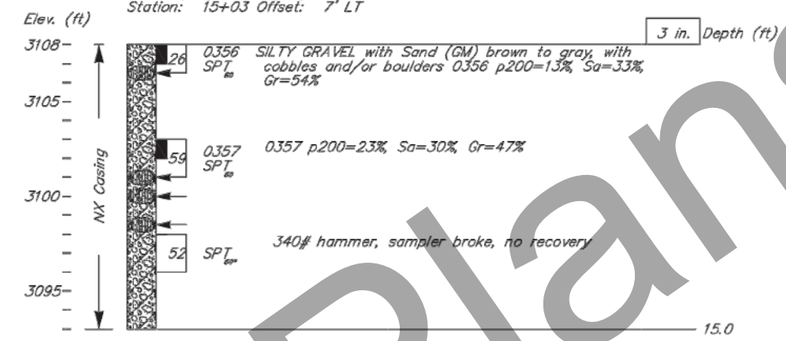

B.O.H. 15 ft.
Notes: Casing broke and sampler damaged at 10', left 5' of casing in ground
Hammer: Cathead Rope Method both 140 and 340 lb hammer
Equipment: CME 75 Truck
Drilling Method: NX Casing, BW rotary
Geologist: K.T. Hemenway

Preliminary Plans

PLANS DEVELOPED BY: STATE OF ALASKA DEPARTMENT OF TRANSPORTATION & PUBLIC FACILITIES, NORTHERN REGION, 2301 PEGER ROAD, FAIRBANKS, AK 99709 (907)451-2200
R:\Projects\Denali_Hwy\00128_Rock_Creek_Brdg\6 Design\4 CAD\1 Plots\00128_N2-N14 Thu, Sep/03/20 03:25pm

DESIGNED BY: D. Hemstreet	CHECKED: Engineer		
DRAWN BY: R. Angell	CHECKED: J. Nicolazzo		
QUANTITIES BY: Engineer	CHECKED: Engineer		

STATE OF ALASKA
DEPARTMENT OF TRANSPORTATION AND PUBLIC FACILITIES
STATEWIDE MATERIALS

ROCK CREEK BRIDGE

DENALI HIGHWAY MP 25

TEST HOLE & PENETROMETER LOGS

BRIDGE NO. 0684
DWG. NO. 14

NO.	DATE	REVISION

STATE	PROJECT DESIGNATION	YEAR	SHEET NO.	TOTAL SHEETS
ALASKA	0750015/NFHWY00128	2020	N15	N16

TH 2
Date: 9/15/94 – 9/16/94
Station: 15+14 Offset: 25' RT

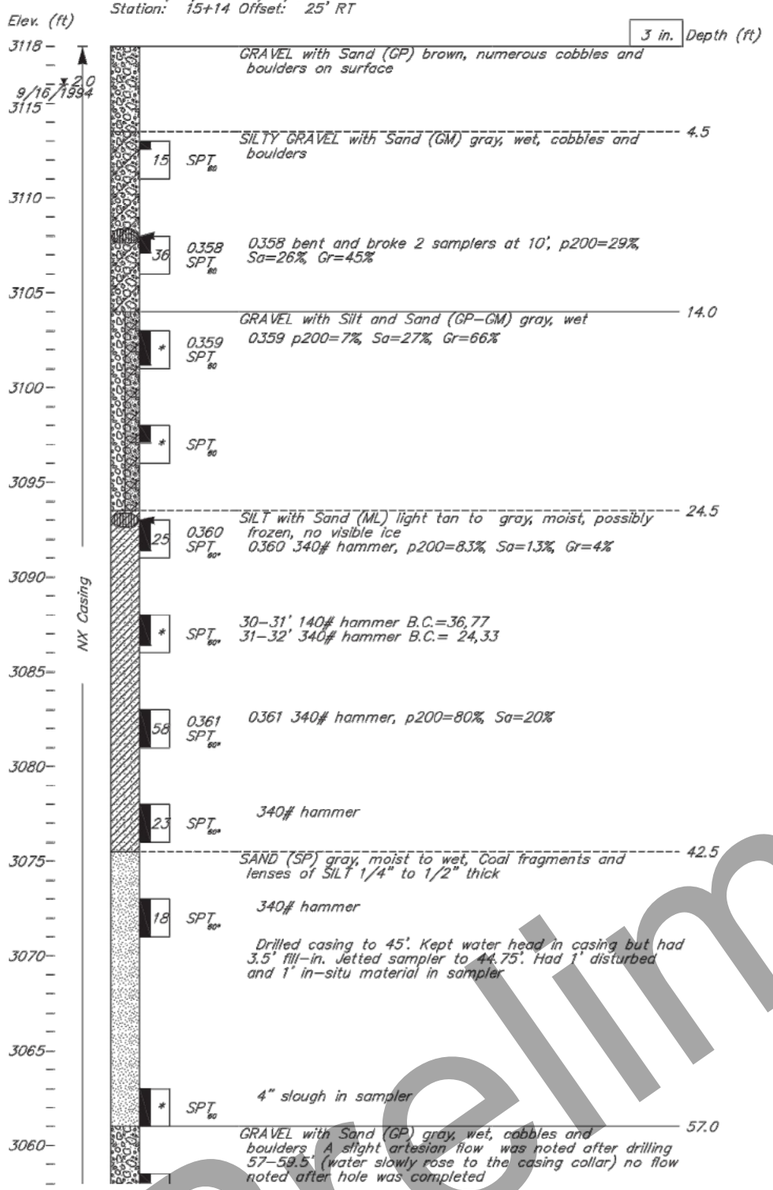

TH 2
Date: 9/15/94 – 9/16/94
Station: 15+14 Offset: 25' RT

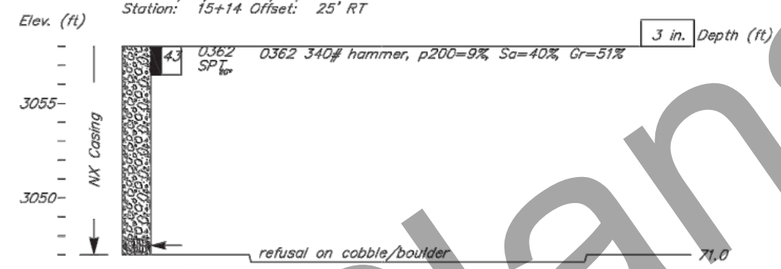

B.O.H. 71 ft.
Notes: Broken sampler at 10', test hole stopped, and moved ahead 2'
Hammer: Cathead Rope Method both 140 and 340 lb hammer
Equipment: CME 75 Truck
Drilling Method: NX Casing, BW rotary
Geologist: K.T. Hemenway

Preliminary Plans

DESIGNED BY: D. Hemstreet	CHECKED: Engineer		
DRAWN BY: R. Angell	CHECKED: J. Nicolazzo		
QUANTITIES BY: Engineer	CHECKED: Engineer		

STATE OF ALASKA
DEPARTMENT OF TRANSPORTATION AND PUBLIC FACILITIES
STATEWIDE MATERIALS

ROCK CREEK BRIDGE

DENALI HIGHWAY MP 25

TEST HOLE & PENETROMETER LOGS

BRIDGE NO. 0684
DWG. NO. 15

PLANS DEVELOPED BY: STATE OF ALASKA DEPARTMENT OF TRANSPORTATION & PUBLIC FACILITIES, NORTHERN REGION, 2301 PEGER ROAD, FAIRBANKS, AK 99709 (907)451-2200
R:\Projects\Denali_Hwy\00128_Rock_Creek_Brg\6 Design\4 CAD\1 Plots\00128_N2-N15 Thu, Sep/03/20 03:25pm

NO.	DATE	REVISION

STATE	PROJECT DESIGNATION	YEAR	SHEET NO.	TOTAL SHEETS
ALASKA	0750015/NFHWY00128	2020	N16	N16

PEN 2

Date: 9/18/94 – 9/18/94
Station: 15+81 Offset: 5' RT

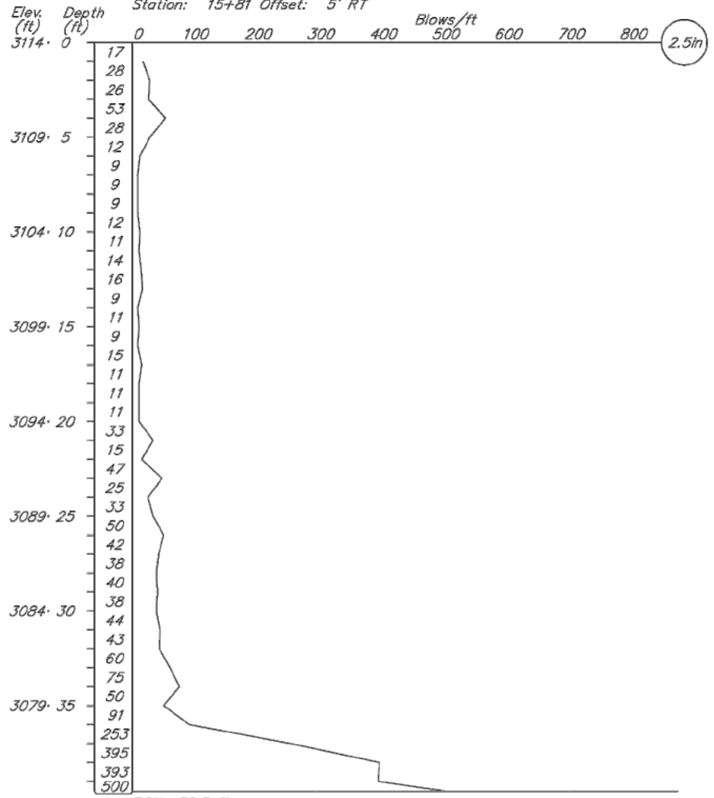

BOH: 39.5 ft
Notes: Pullout break force immediately after driving was 74,594 lbs.
Hammer: CME Auto Hammer 340 lb hammer
Equipment: CME 75 Truck
Geologist: K.T. Hemenway

TH 3

Date: 9/17/94 – 9/18/94
Station: 15+89 Offset: 7' LT

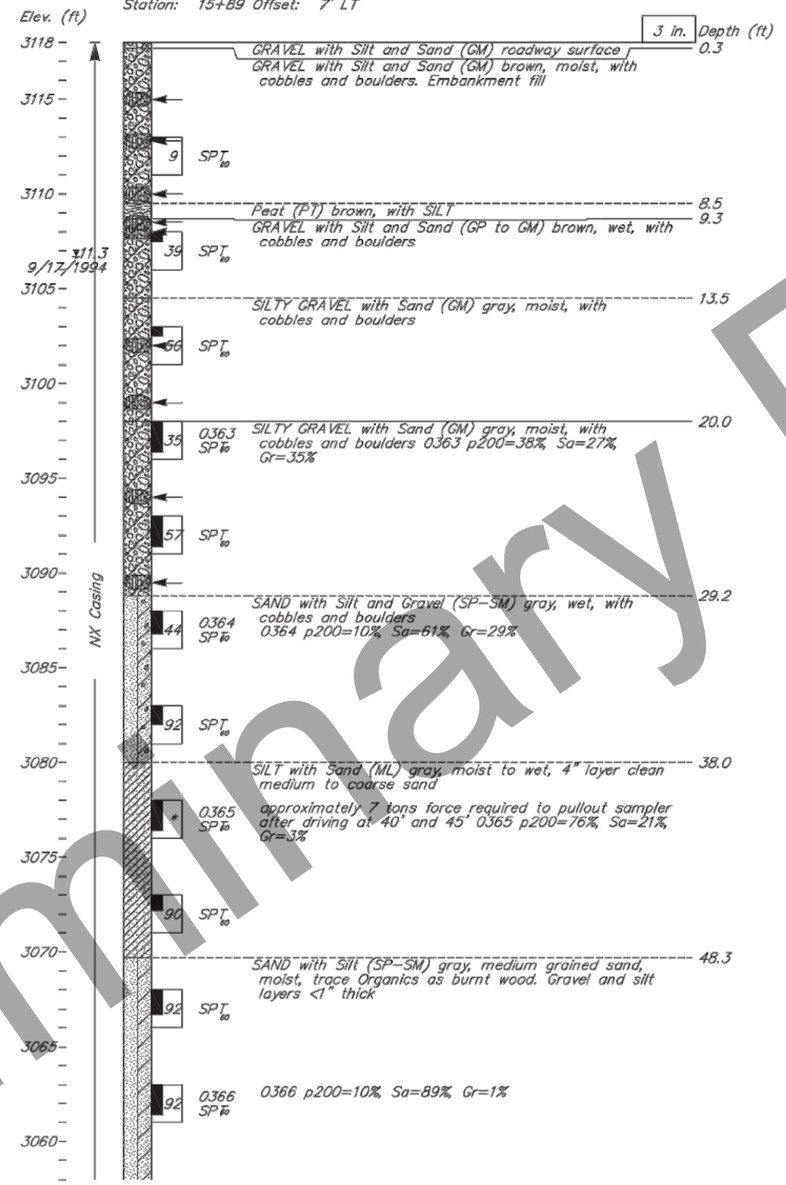

TH 3

Date: 9/17/94 – 9/18/94
Station: 15+89 Offset: 7' LT

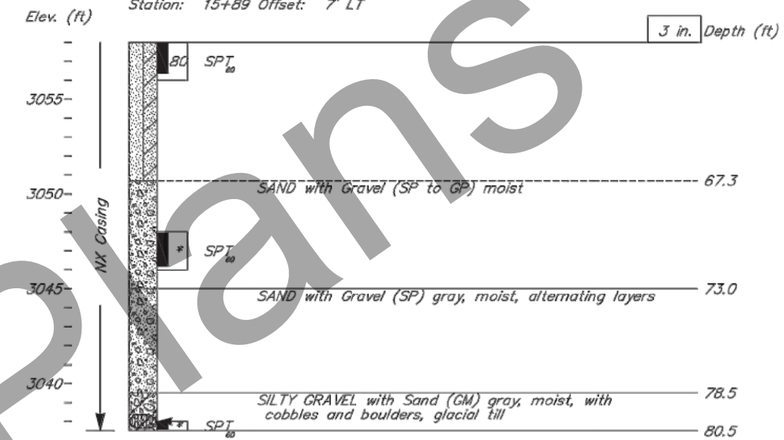

B.O.H. 80.5 ft.
Hammer: Cathead Rope Method 140 lb hammer
Equipment: CME 75 Truck
Drilling Method: NX Casing, BW rotary
Geologist: K.T. Hemenway

Preliminary Plans

PLANS DEVELOPED BY: STATE OF ALASKA DEPARTMENT OF TRANSPORTATION & PUBLIC FACILITIES, NORTHERN REGION, 2301 PEGER ROAD, FAIRBANKS, AK 99709 (907)451-2200
R:\Projects\Denali_Hwy\00128_Rock_Creek_Brdg\6 Design\4 CAD\1 Plots\00128_N2-N16 Thu, Sep/03/20 03:25pm

DESIGNED BY: D. Hamstreet	CHECKED: Engineer		
DRAWN BY: R. Angell	CHECKED: J. Nicolazzo		
QUANTITIES BY: Engineer	CHECKED: Engineer		

STATE OF ALASKA
DEPARTMENT OF TRANSPORTATION AND PUBLIC FACILITIES
STATEWIDE MATERIALS

ROCK CREEK BRIDGE

DENALI HIGHWAY MP 25

TEST HOLE & PENETROMETER LOGS

BRIDGE NO. 0684
DWG. NO. 16

NO.	DATE	REVISION

STATE	PROJECT DESIGNATION	YEAR	SHEET NO.	TOTAL SHEETS
ALASKA	0750015/NFHWY00128	2020	Q1	Q2

PROJECT SITE-SPECIFIC CONDITIONS

ESCP GENERAL NOTES

GENERAL

1. THIS ESCP IS A GENERAL PLAN FOR GUIDING THE DEVELOPMENT OF THE CONTRACTORS SWPPP. THE CONTRACTOR IS EXPECTED TO PROVIDE ADDITIONAL DETAILS AND BMP'S BASED ON THE CONTRACTORS ACTUAL SCHEDULE AND CONSTRUCTION METHODS, AS REQUIRED TO COMPLY WITH THE 2016 CONSTRUCTION GENERAL PERMIT AND THE 2021 CONSTRUCTION GENERAL PERMIT ONCE ISSUED AND SECTION 641 OF THE PROJECT SPECIFICATIONS.
2. INITIATE EROSION AND SEDIMENT CONTROLS PRIOR TO EARTH DISTURBING ACTIVITIES.
3. RE-VEGETATE ALL DISTURBED GROUND CAPABLE OF SUPPORTING VEGETATION FOR FINAL STABILIZATION. COVER ERODIBLE AREAS (NOT RE-VEGETATED) BY ROCK OR OTHER NON-ERODIBLE MATERIAL APPROVED BY ENGINEER. ATTAINMENT OF FINAL STABILIZATION WILL BE AS APPROVED BY THE ENGINEER.
4. INSTALL PERIMETER CONTROL BMP WHEN WORKING WITHIN 25 FEET OF SURFACE WATERS AND ALONG WETLANDS WHERE A 25 FOOT VEGETATIVE BUFFER IS NOT RETAINED.
5. ALL IN WATER WORK MUST BE ISOLATED FROM FLOWING WATER. ISOLATION METHODS INCLUDE:
   - 1. SILT CURTAINS
   - 2. COFFERDAMS
   - 3. OTHER METHODS APPROVED BY ENGINEER
6. CONSTRUCTION ENTRANCE/EXIT MUST BE ESTABLISHED TO MINIMIZE OFF SITE IMPACTS.
7. RECLAIM STOCKPILE AND STAGING AREAS TO THEIR ORIGINAL CONDITION AS APPROVED BY THE ENGINEER.
8. AREAS OF DISTURBANCE, TEMPORARY AND PERMANENT STABILIZATION, WILL BE MARKED AS WORK PROCEEDS AND ADDED TO THE LEGEND.
9. REFER TO APPENDIX A OF THE CONTRACT FOR ENVIRONMENTAL PERMIT INFORMATION.
10. TEMPORARY BMPS WONT BE MEASURED FOR PAYMENT AND ARE SUBSIDIARY TO PAY ITEM 641.0003.0000.
11. MATERIAL SITES WILL BE CONTRACTOR FURNISHED. CONTRACTOR RESPONSIBLE TO COMPLY WITH ALL REQUIREMENTS OUTLINED IN SECTION 641 AND CGP WITH MAINTAINING MATERIAL SITES.

PERIMETER CONTROL

12. VEGETATIVE BUFFER IS THE PREFERRED PERIMETER PROTECTION FOR THIS PROJECT, WETLANDS WITHIN THE RIGHT-OF-WAY IN THE PROJECT LIMITS HAVE BEEN PERMITTED FOR VEGETATIVE BUFFER. SEE THE U.S. ARMY CORPS OF ENGINEERS PERMIT IN APPENDIX A FOR SPECIFIC REQUIREMENTS REGARDING WETLAND IMPACTS.

HAULING

13. ENSURE LOADS ARE STABLE OR COVERED SO MATERIAL ESCAPEMENT DOESN'T OCCUR DURING HAULING ACTIVITIES.
14. SWEEP CLEAN STABILIZED CONSTRUCTION EXITS AND MATERIAL SITE ENTRANCES AND EXITS EACH SHIFT OR AS DIRECTED BY THE ENGINEER.

STOCKPILE PROTECTION

15. PROTECT ALL ERODIBLE STOCKPILES WITH EROSION AND SEDIMENT BMPS.
16. EROSION AND SEDIMENT CONTROL BMPS MAY REQUIRE REMOVAL AND RE-INSTALLATION EACH SHIFT.

IN WATER WORK

17. ALL IN WATER WORK WILL BE ISOLATED FROM FLOWING WATER.

TIMING OF BMPS INSTALLATION

18. INSTALL TEMPORARY PERIMETER CONTROL BMPS BEFORE UP-GRADIENT SOIL DISTURBANCE OCCURS.
19. COMPLETE PLACEMENT OF DITCH AND OTHER DISSIPATION MEASURES WITHIN 24 HOURS OF CULVERT INSTALLATION.

WINTER SHUTDOWN

20. IF FINAL STABILIZATION IS NOT ACHIEVED BEFORE WINTER SHUTDOWN, EXPOSED GROUND, INCLUDING BUT NOT LIMITED TO EMBANKMENT SLOPES AND STOCKPILES, MUST BE TEMPORARILY STABILIZED FOR SPRING BREAK-UP AND UNTIL PERMANENT STABILIZATION IS ACHIEVED THE NEXT SEASON. ALL STABILIZATION AND OTHER EROSION CONTROL MEASURES NECESSARY FOR WINTER SHUTDOWN ARE SUBSIDIARY TO PAY ITEM 641.0003.0000.

WETLAND AREAS

21. WETLAND LOCATIONS ONLY SHOWN WITHIN THE ROW ON SHEET Q2
22. PROTECTED WETLANDS: RESTRICTED USE AREA; REFER TO ENVIRONMENTAL PERMITS FOR ADDITIONAL INFORMATION REGARDING RESTRICTIONS AND REQUIREMENTS WHEN WORKING ADJACENT TO PROTECTED WETLAND AREAS. FOR THIS PROJECT, ALL WETLANDS BEYOND THE EXISTING AND TEMPORARY RIGHT-OF-WAY ARE PROTECTED WETLANDS.
23. TEMPORARY WETLAND IMPACT AREAS: LIMITED USE AREA; REFER TO ENVIRONMENTAL PERMITS FOR ADDITIONAL INFORMATION REGARDING TERMS OF USE, RESTRICTIONS AND REQUIREMENTS.
24. WETLAND MAPPING: WETLAND LOCATIONS ILLUSTRATED IN THE ESCP HAVE BEEN DETERMINED USING AVAILABLE AERIAL PHOTOGRAPHY, IMAGERY, AND FIELD DELINEATION. THE WETLANDS ILLUSTRATIONS ARE INTENDED FOR USE IN BIDDING AND SWPPP PREPARATION. THE CONTRACTOR SHALL FIELD CERTIFY WETLAND LOCATIONS PRIOR TO ANY EARTH DISTURBING ACTIVITIES. WETLAND MAPPING IS SUBSIDIARY TO SECTION 641.

GENERAL SITE INFORMATION

- SITE FUNCTION: ROAD
- AVERAGE ANNUAL TOTAL PRECIPITATION: 22.63 INCHES (SOURCE: WESTERN REGIONAL CLIMATE CENTER WEBSITE FOR SUMMIT LAKE, ALASKA)
- 2-YEAR 24-HOUR PRECIPITATION: 1.60 INCHES (SOURCE: https://hdsc.nws.noaa.gov/hdsc/pfds/pfds_map_ak.html)
- PROJECT AREAS ARE LISTED BELOW (MATERIAL SITES NOT INCLUDED):

PROJECT INFORMATION TABLE

LOCATION	MP 25
PROJECT AREA (ACRE)	10.7
DISTURBED AREA (ACRE)	2.5
PRE-CONSTRUCTION IMPERVIOUS AREA (ACRE)	1.7
POST-CONSTRUCTION IMPERVIOUS AREA (ACRE)	1.7
PRE-CONSTRUCTION RUNOFFF COEFFICIENT	0.27
POST-CONSTRUCTON RUNOFF COEFFICIENT	0.32

ENVIRONMENTAL INFORMATION

- RECEIVING WATER BODIES: ROCK CREEK TO DELTA RIVER
- IMPAIRED WATER BODIES: NONE
- TOTAL MAXIMUM DAILY LOAD (TMDL) WATERS: NONE
- THREATENED AND ENDANGERED SPECIES: NONE
- HISTORIC & CULTURAL RESOURCE PRESENCE: NONE
- FISH AND WILDLIFE ESSENTIAL HABITAT: NONE
- STAKE PERMIT BOUNDARIES IN ACCORDANCE WITH SECTION 642 TO ENSURE ALL WORK IS WITHIN PERMIT BOUNDARIES.
- MIGRATORY BIRD TREATY: ALL CONSTRUCTION ACTIVITIES MUST COMPLY WITH THE MIGRATORY BIRD TREATY ACT. AVOID LAND DISTURBANCE, VEGETATION CLEARING, AND BRIDGE DEMOLITION BETWEEN MAY 1 TO JULY 15 TO COMPLY WITH USFWS MIGRATORY BIRD TREATY ACT TIMING RECOMMENDATIONS.
- REFER TO APPENDIX A FOR PROJECT SPECIFIC PERMIT INFORMATION AND ENVIRONMENTAL COMMITMENTS.
- CONTACT THE DOT PROJECT ENGINEER WITH ADDITIONAL QUESTIONS/CONCERNS REGARDING ENVIRONMENTAL ISSUES OR PERMIT INFORMATION.
- REFER TO THE AKDOT&PF ALASKA STORM WATER POLLUTION PREVENTION PLAN GUIDE FOR ADDITIONAL SWPPP GUIDANCE, INCLUDING BMPS AND CONDITIONS FOR THEIR USE.

ANTICIPATED CONSTRUCTION SEQUENCE

THIS ESCP ASSUMES THE FOLLOWING CONSTRUCTION SEQUENCE:

1. CLEAR ALIGNMENTS
2. INSTALL PERIMETER CONTROLS
3. CONSTRUCT DIVERSION ALIGNMENT AND STRUCTURE
4. SEED "D" LINE GROUND DISTURBANCE AND FINISHED SLOPES
5. DEMOLISH BRIDGE NO. 0684
6. INSTALL CULVERTS
7. INSTALL BRIDGE NO. 0684
8. CONSTRUCT "O" LINE EMBANKMENT AND SURFACE COURSE
9. SEED "O" LINE GROUND DISTURBANCE AND FINISHED SLOPES
10. INSTALL DELINEATORS
11. REMOVE DIVERSION ALIGNMENT AND STRUCTURE
12. FINISH GRADE AREA AND SEED ALL GROUND DISTURBANCE

EROSION SEDIMENT CONTROL PLANS 1 OF 2

STATE OF ALASKA 49TH GUANGYAN TU GRIFFIN CE 11229 REGISTERED PROFESSIONAL ENGINEER

Preliminary Plans

PLANS DEVELOPED BY: STATE OF ALASKA DEPARTMENT OF TRANSPORTATION & PUBLIC FACILITIES, NORTHERN REGION, 2301 PEGER ROAD, FAIRBANKS, AK 99709 (907)451-2200
R:\Projects\Denali_Hwy\00128_Rock_Creek_Brdg\6 Design\4 CAD\1 Plots\00128_Q_ESCP-NOTE Thu, Sep/03/20 03:25pm

NO.	DATE	REVISION

STATE	PROJECT DESIGNATION	YEAR	SHEET NO.	TOTAL SHEETS
ALASKA	0750015/NFHWY00128	2020	Q2	Q2

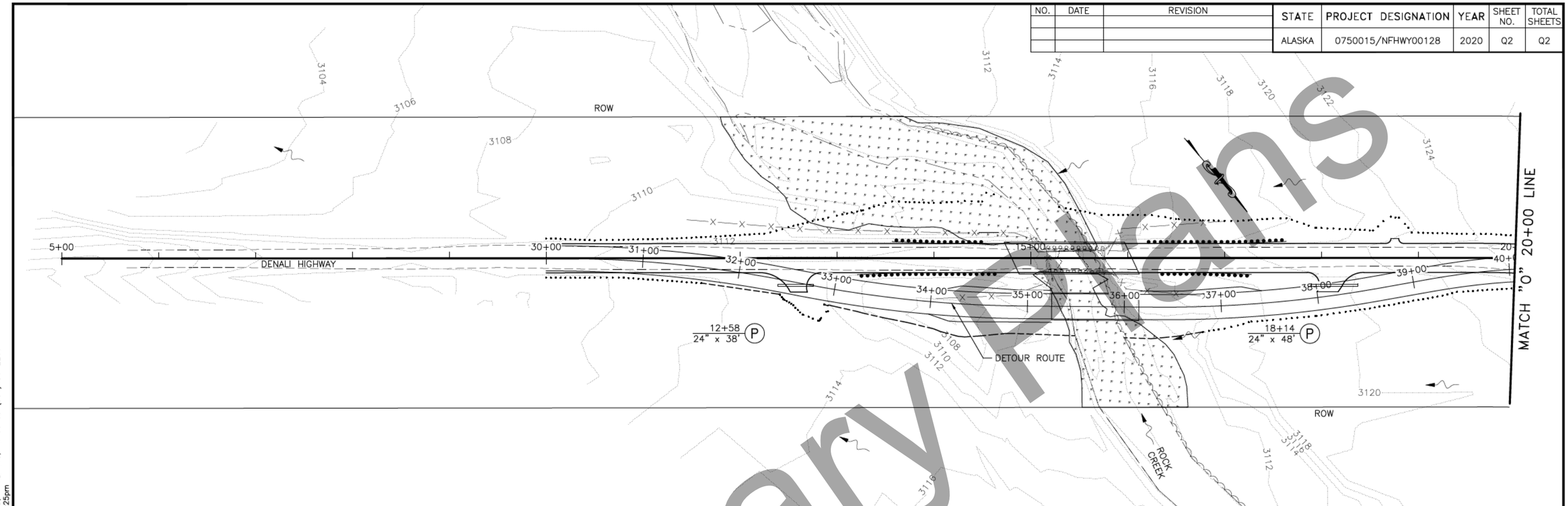

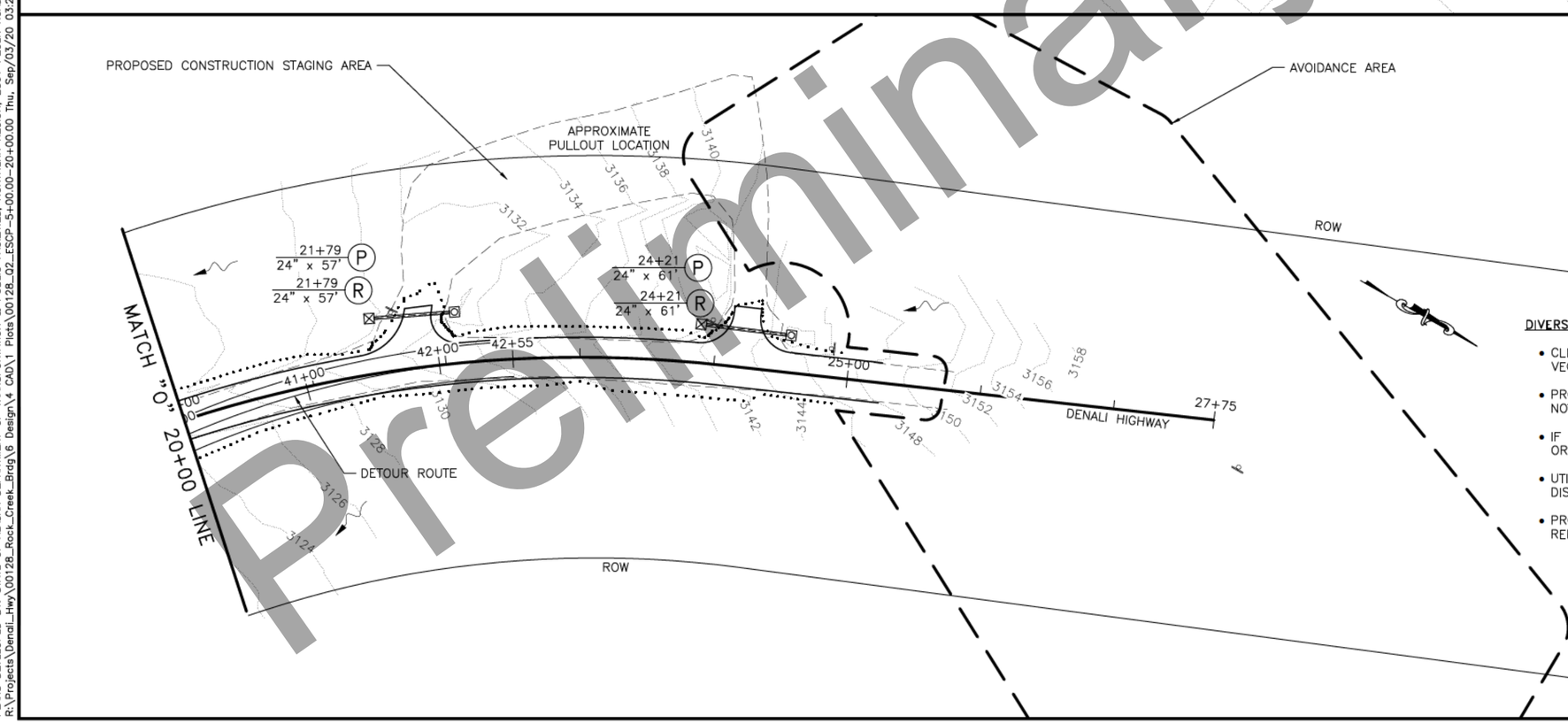

LEGEND:

- —X—X— PERIMETER PROTECTION
- SLOPE LIMITS
- FLOW DIRECTION (PRE-CONSTRUCTION CONDITIONS)
- INLET PROTECTION
- OUTLET PROTECTION
- WETLANDS

DIVERSION CONSTRUCTION ESCP NOTES:

- CLEAR VEGETATION ONLY WITHIN PROPOSED CLEARING LIMITS, PRESERVE REMAINING VEGETATION TO FUNCTION AS VEGETATIVE BUFFER.
- PROVIDE PERIMETER PROTECTION AT STREAM CROSSING TO ENSURE SEDIMENT DOES NOT DISCHARGE INTO ROCK CREEK.
- IF DIVERSION CONSTRUCTION CREATES CONCENTRATED FLOWS, PROVIDE CHECK DAMS OR SIMILAR VELOCITY CONTROLS UNTIL FINAL STABILIZATION IS ACHIEVED.
- UTILIZE VEGETATIVE BUFFER OR OTHER APPROVED PERIMETER PROTECTION ALONG ALL DISTURBED SLOPES.
- PROVIDE TEMPORARY STABILIZATION FOR DIVERSION SLOPES UNTIL DIVERSION IS REMOVED.

EROSION SEDIMENT CONTROL PLANS 2 OF 2

STATE OF ALASKA 49TH
GUANGYAN TU GRIFFIN
CE 11229
REGISTERED PROFESSIONAL ENGINEER

Preliminary Plans

PLANS DEVELOPED BY: STATE OF ALASKA DEPARTMENT OF TRANSPORTATION & PUBLIC FACILITIES, NORTHERN REGION, 2301 PEGER ROAD, FAIRBANKS, AK 99709 (907)451-2200
R:\Projects\Denali_Hwy\00128_Rock_Creek_Brdg\6 Design\4 CAD\1 Plots\00128_02_ESCP-5+00.00-20+00.00 Thu, Sep/03/20 03:25pm

NO.	DATE	REVISION

STATE	PROJECT DESIGNATION	YEAR	SHEET NO.	TOTAL SHEETS
ALASKA	0750015/NFHWY00128	2020	T1	T2

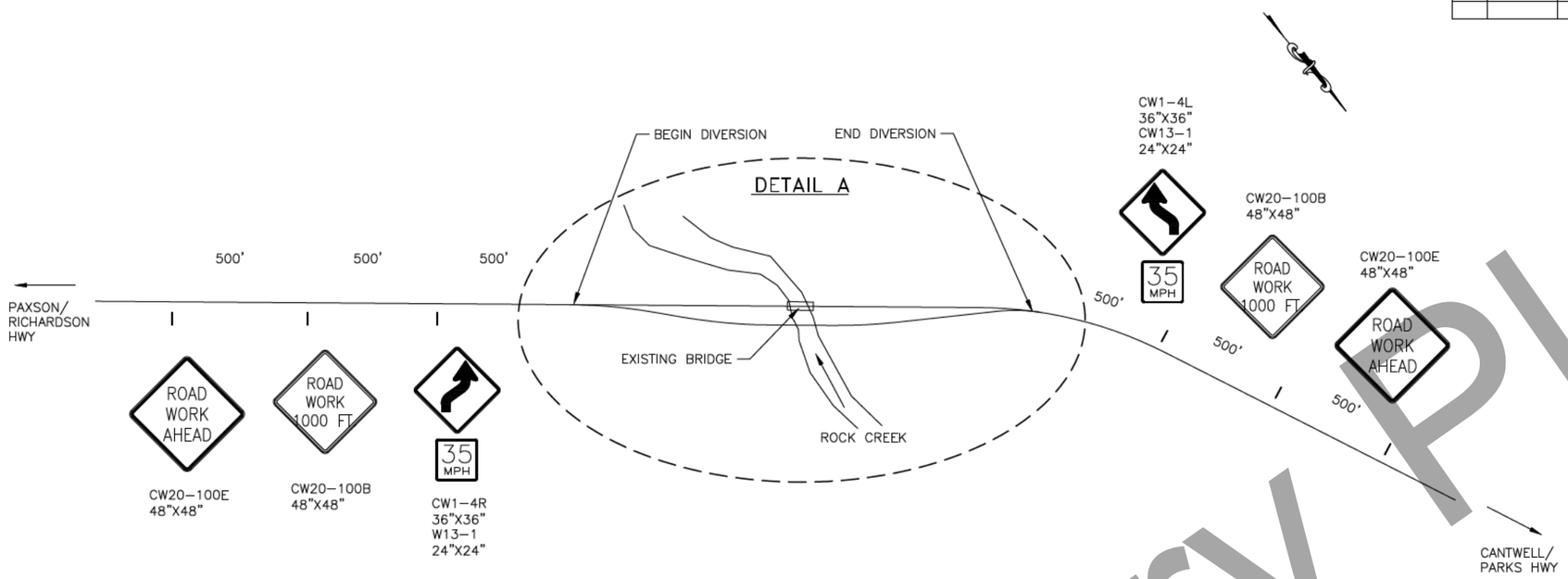

TEMPORARY CROSSING OVERVIEW

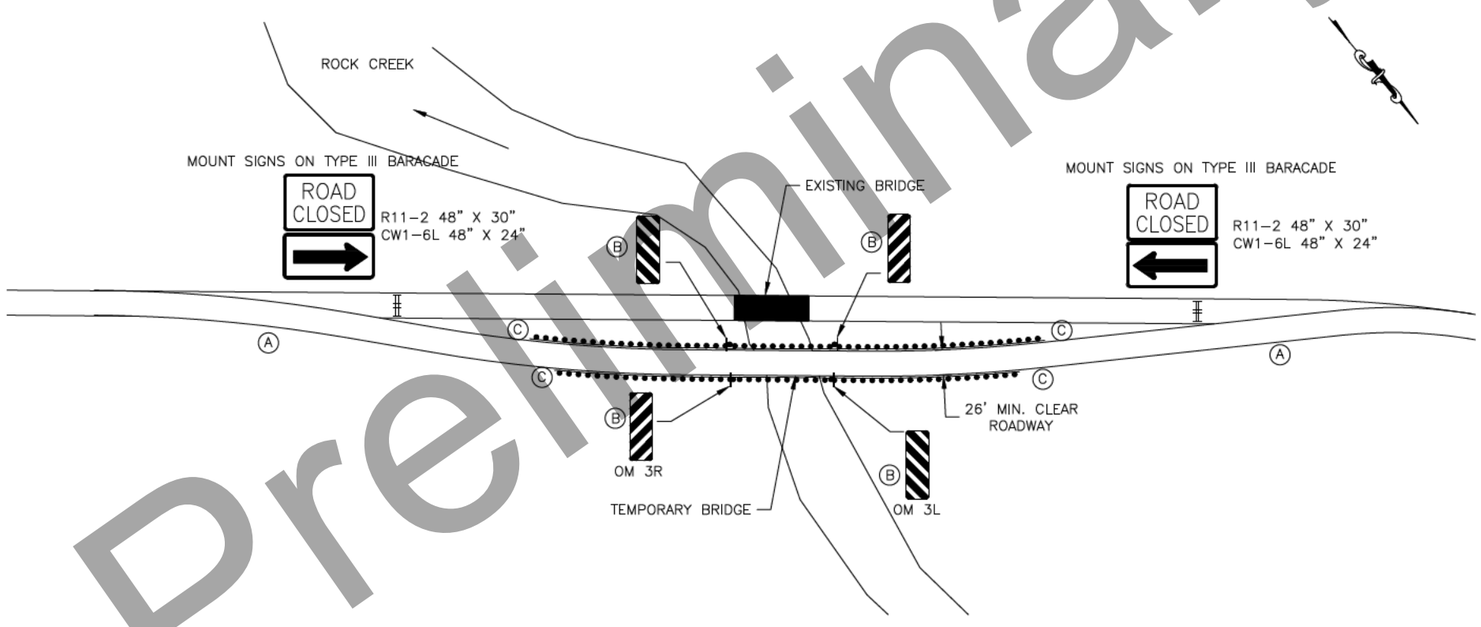

DETAIL A

TRAFFIC CONTROL NOTES:

1. THIS TCP PLAN IS A SCHEMATIC DIAGRAM, NOT TO SCALE, AND MAY VARY DEPENDING ON ACTUAL FIELD CONDITIONS.
2. SIGN MOUNTING HEIGHT TO BE 5' UNLESS DIRECTED OTHERWISE.
3. CONTRACTOR TO PROVIDE BARRIER CONNECTIONS TO TEMPORARY CROSSING DIVERSION AS APPROVED BY THE ENGINEER.
4. INTERCONNECT AND PIN ALL CONCRETE BARRIERS.
5. CONCRETE BARRIERS MUST BE "F" SHAPE PER STANDARD PLAN G-47.00 UNLESS OTHERWISE APPROVED BY THE ENGINEER.
6. INSTALL GUARDRAIL PER STANDARD PLAN G-10.20.
7. ALL WORK AND MATERIALS SHOWN ON THIS SHEET ARE SUBSIDIARY TO PAY ITEM 520.0001.0000 TEMPORARY CROSSINGS.

LEGEND

- = GUARDRAIL/CONCRETE BARRIERS
- = TYPE III BARRICADE
- = CONSTRUCTION SIGN
- (A) PLACE DELINEATORS EVERY 50' ALONG DETOUR EXCEPT AT GUARDRAIL/CONCRETE BARRIERS AND TEMPORARY BRIDGE
- (B) PLACE OBJECT MARKERS AT ENDS OF THE TEMPORARY CROSSING
- (C) PLACE GUARDRAIL/CONCRETE BARRIER WITH END TREATMENTS

Preliminary Plans

TRAFFIC CONTROL

STATE OF ALASKA 49TH
JUANGYAN TU GRIFFIN
CE 11229
REGISTERED PROFESSIONAL ENGINEER

PLANS DEVELOPED BY: STATE OF ALASKA DEPARTMENT OF TRANSPORTATION & PUBLIC FACILITIES, NORTHERN REGION, 2301 PEGER ROAD, FAIRBANKS, AK 99709 (907)451-2200
R:\Projects\Denali_Hwy\00128_Rock_Creek_Brg\6 Design\4 CAD\1 Plots\00128_T_TPCP-T1 TRAFFIC CONTROL Thu, Sep/03/20 03:25pm

NO.	DATE	REVISION

STATE	PROJECT DESIGNATION	YEAR	SHEET NO.	TOTAL SHEETS
ALASKA	0750015/NFHWY00128	2020	T2	T2

VERTICAL DROP-OFFS

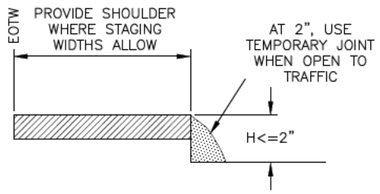

CASE A

DROP-OFFS ≤2 INCHES
(PAVED SURFACES ONLY)

1. USE "UNEVEN LANES" (W8-11) SIGNS FOR ALL DROP-OFFS IN BETWEEN TRAFFIC LANES
2. LEAVE NO DROP-OFFS > 1.5" IN THE TRAFFIC LANE OR ACTIVE WHEEL TRACK

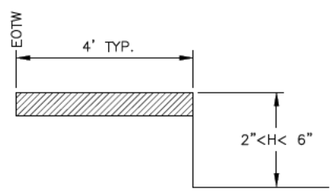

CASE B

2"< DROP-OFFS < 6"
(ALL ROADWAY SURFACES)

1. PLACE CONES OR CANDLES FOR DROP-OFFS ≥ 4 FEET AND ≤ 30 FEET FROM EOTW.
2. USE DRUMS OR TYPE II BARRICADES FOR DROP-OFFS < 4 FEET FROM THE EOTW.

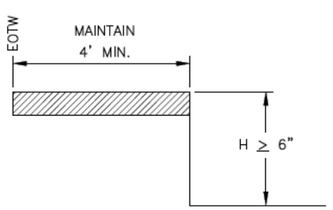

CASE C

DROP-OFFS ≥6"
(ALL ROADWAY SURFACES AND ROADSIDE SLOPES)

1. PLACE DRUMS OR TYPE II BARRICADES FOR DROP-OFFS ≤ 24" WITHIN THE CLEAR AREA.
2. PROVIDE PORTABLE CONCRETE BARRIERS FOR DROP-OFFS > 24" WITHIN 15 FEET OF THE EOTW. USE DRUMS OR TYPE II BARRICADES IF BEYOND 15 FEET.

FILL SLOPES

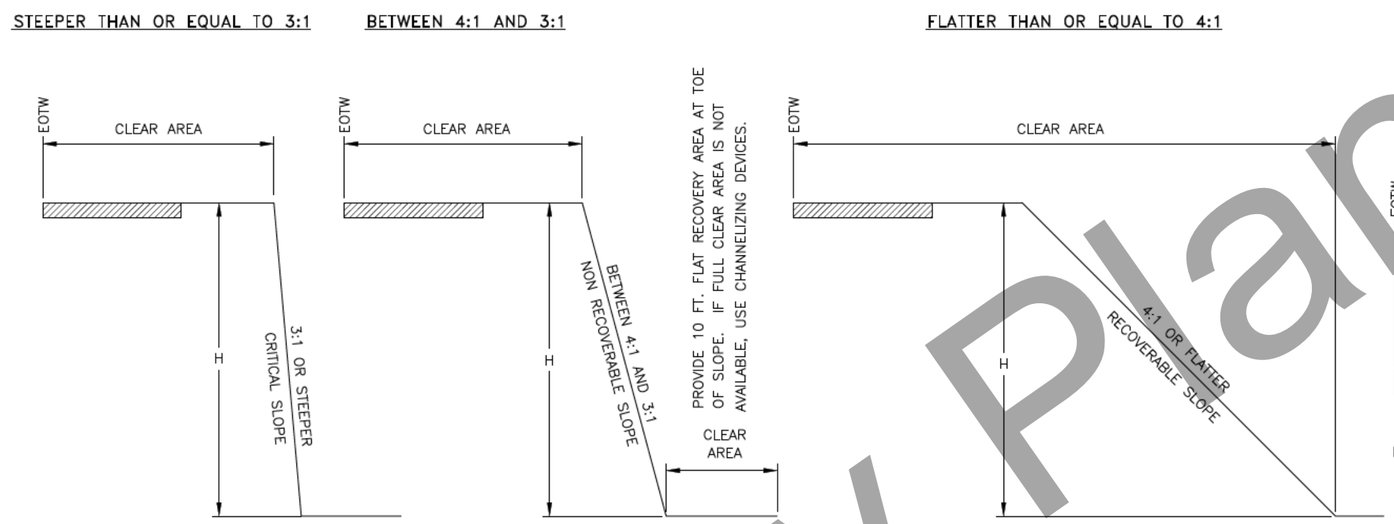

CUT SLOPES

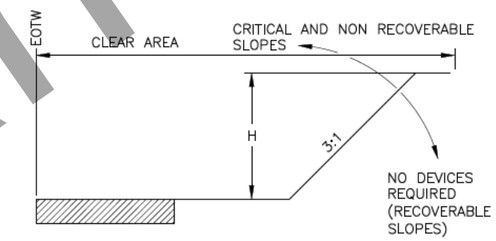

EOTW = EDGE OF TRAVELED WAY

CLEAR AREA REQUIREMENTS

	LOW SPEED < = 35 MPH	INTERMEDIATE SPEED 40 MPH TO 45 MPH	HIGH SPEED ≥ = 50 MPH
RURAL	15'	24'	30'
URBAN	10' DITCH SECTIONS, OR 2' BEHIND CURB	15' DITCH CONDITIONS, OR 2' BEHIND CURB	15' DITCH CONDITIONS, OR 2' BEHIND CURB

CHANNELIZING DEVICE REQUIREMENTS FOR SLOPES 3:1 OR STEEPER WITHIN THE CLEAR AREA

	H <= 15'	H > 15'
< 2000 VPD LOW VOLUME	CANDLES OR CONES	TYPE II BARRICADES OR DRUMS
> 2000 VPD	TYPE II BARRICADE OR DRUMS	PORTABLE CONCRETE BARRIER OR TEMPORARY GUARDRAIL

TRAFFIC CONTROL NOTES:

1. USE THE EXISTING CROSS-SECTION (PRIOR TO CONSTRUCTION) AS A BASIS FOR DETERMINING WHEN CHANNELIZING DEVICES ARE NEEDED.
2. INSTALL CHANNELIZING DEVICES WHEN THE HORIZONTAL OR VERTICAL CURVATURE IS MADE MORE SEVERE.
3. INSTALL FLEXIBLE DELINEATORS WHEN ALL VEGETATION OVER 4 FEET HIGH IS CLEARED FROM FILL SLOPES THAT ARE 3:1 OR STEEPER IN THE CLEAR AREA.
4. USE PORTABLE CONCRETE BARRIER FOR WARRANTING CONDITIONS WHICH LAST LONGER THAN 3 DAYS. FOR CONDITIONS LASTING LESS THAN 3 DAYS, OTHER CHANNELIZING DEVICES MAY BE INSTALLED.
5. TERMINATE RUNS OF PORTABLE CONCRETE BARRIER USING THE FOLLOWING METHODS:
   - A) CONNECT TO A PORTABLE CRASH CUSHION, OR
   - B) PROVIDE A CONCRETE BARRIER WITH THRIE BEAM TRANSITION TO W-BEAM GUARDRAIL, TREATED WITH A PARALLEL TERMINAL (SEE SECTION 710).
   - C) FLARE THE ENDS OF THE PORTABLE CONCRETE BARRIER AWAY FROM THE ROADWAY AT A RATE OF 7:1 ON A COMPACTED SLOPE OF 6:1 OR FLATTER, OUTSIDE OF THE CLEAR AREA. INSTALL A SLOPING PORTABLE CONCRETE BARRIER END TREATMENT, OR
   - D) BURY IN THE BACKSLOPE.
6. TERMINATE THE RUNS OF TEMPORARY W-BEAM GUARDRAIL USING THE FOLLOWING METHODS:
   - A) PROVIDE A PARALLEL TERMINAL (SEE SECTION 710)
   - B) FLARE THE ENDS OF THE TEMPORARY GUARDRAIL AWAY FROM THE ROADWAY AT A RATE OF 6:1 ON A COMPACTED SLOPE OF 6:1 OR FLATTER OUTSIDE OF THE CLEAR AREA, TERMINATE WITH A STANDARD W-BEAM END SECTION, OR
   - C) BURY IN THE BACKSLOPE.

EQUIPMENT NOTES:

1. WHEN THERE IS ACTIVE, NONMOBILE CONSTRUCTION EQUIPMENT WITHIN THE CLEAR AREA, DELINEATE THE ROADSIDE WITH TRAFFIC CONES.
2. SEPARATE PROCEDURES ARE REQUIRED FOR MOBILE WORK ZONE OPERATIONS AND SHORT DURATION WORK OF LESS THAN 12 HOURS.

WINTER SHUTDOWN NOTES:

1. WHEN REQUIRED, USE CHANNELIZING DEVICES WHICH CAN BE MAINTAINED OVER WINTER.
2. NO CHANNELIZING DEVICES ARE REQUIRED IF:
   - A) CONSTRUCTION SLOPES ARE RECOVERABLE, AND
   - B) SLOPES ARE SMOOTH AND COMPACTED, AND
   - C) REQUIRED CLEAR AREA IS PROVIDED

Preliminary Plans

TRAFFIC CONTROL PLAN

STATE OF ALASKA 49TH
GUANGYAN TU GRIFFIN
CE 11229
REGISTERED PROFESSIONAL ENGINEER

PLANS DEVELOPED BY: STATE OF ALASKA DEPARTMENT OF TRANSPORTATION & PUBLIC FACILITIES, NORTHERN REGION, 2301 PEGER ROAD, FAIRBANKS, AK 99709 (907)451-2200
R:\Projects\Denali_Hwy\00128_Rock_Creek_Brdg\6 Design\4 CAD\1 Plots\00128_T_TCP-T3 TRAFFIC CONTROL PLAN Thu, Sep/03/20 03:25pm