NO.	DATE	REVISION

STATE	PROJECT DESIGNATION	YEAR	SHEET NO.	TOTAL SHEETS
ALASKA	PENDING/NFHWY00355	2020	A1	80
CDS ROUTE: 190000	MILEPOINT: 140.44 TO 151.52			

STATE OF ALASKA
DEPARTMENT OF TRANSPORTATION
&
PUBLIC FACILITIES

PROPOSED HIGHWAY PROJECT

RICHARDSON HIGHWAY MP 138–148 REHABILITATION

NFHWY00355 / PENDING

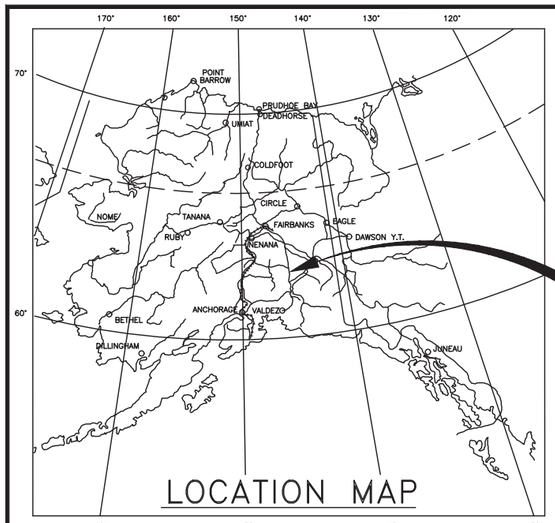

PROJECT LOCATION

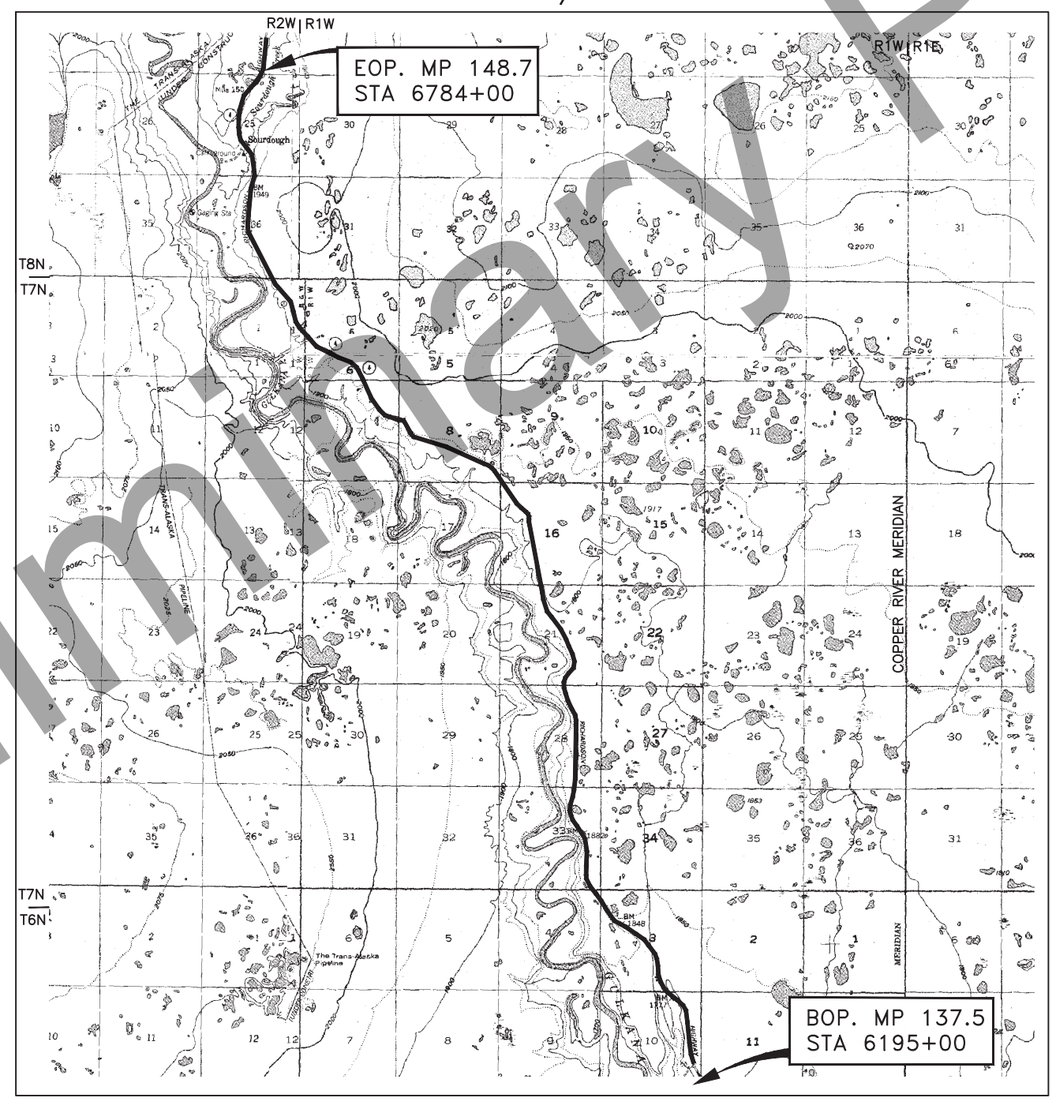

LOCATED WITHIN
SEC. 5,6,7,18,19, T4N, R1W; SEC. 4,5,8,9,17,20,29,32, T5N, R1W; SEC. 2,11,12,14,23,26,27,28,33, T6N, R1W; SEC. 3,4,10,11,14,23,26,35, T7N, R1W; SEC. 6,7,8,9,16,21,28,33, T8N, R1W; SEC. 1, T8N, R2W; SEC. 24,25,36, T9N, R2W
COPPER RIVER MERIDIAN, ALASKA
CHITINA RECORDING DISTRICT

INDEX OF SHEETS

SHEET NO.	DESCRIPTION
A1	TITLE SHEET
A2	LEGEND
B1–B3	TYPICAL SECTIONS
C1	ESTIMATE OF QUANTITIES
C2	GENERAL NOTES & ABBREVIATIONS
D1–D2	GUARDRAIL SUMMARY & DETAILS
D3	SUPERELAVATION SUMMARY
E1–E9	CULVERT/DRAINAGE DETAILS & SUMMARY
E10	MISCELLANEOUS DETAILS
F1–F20	PLAN & PROFILE
F21	PLAN OVER PLAN MP 134
G1	APPROACH SUMMARY & DETAILS
G2	TURNOUT SUMMARY & DETAILS
H1–H5	SIGNING & STRIPING
N1–N2	BRIDGE PLANS
Q1–Q11	EROSION SEDIMENT CONTROL PLANS
Q12	EROSION SEDIMENT CONTROL PLANS MP 134
T1–T2	TRAFFIC CONTROL PLAN
V1–V16	STANDARD PLANS

DESIGN DESIGNATIONS

ADT (2014)	450
ADT (2035)	555
DHV (17.6%)	100
PERCENT TRUCKS (T)	23%
DIRECTIONAL SPLIT (D)	60 / 40
DESIGN SPEED (V)	65 MPH
DESIGN EAL'S (30 YEARS)	617,734

PROJECT SUMMARY

WIDTH OF PAVEMENT	36 FEET
LENGTH OF GRADING	58,800 FEET
LENGTH OF PAVING	58,900 FEET
LENGTH OF PROJECT	58,900 FEET

RUSSELL JOHNSON, PROJECT MANAGER
THOR BERGSTROM, DESIGNER

STATE OF ALASKA

Preliminary Plans

PLANS DEVELOPED BY: STATE OF ALASKA DEPARTMENT OF TRANSPORTATION & PUBLIC FACILITIES, NORTHERN REGION, 2301 PEGER ROAD, FAIRBANKS, AK 99709 (907)451-2200
C:\Users\tjbergstrom\Desktop\Home Work Home\Home Rich\03 Drafting\90265_A1_Title Fri, Aug/07/20 01:57pm

NO.	DATE	REVISION

STATE	PROJECT DESIGNATION	YEAR	SHEET NO.	TOTAL SHEETS
ALASKA	PENDING/NFHWY00355	2020	A2	A2

	RECOVERED	SET
BLM MONUMENT		
GLO MONUMENT		
USC&GS MONUMENT		
PRIMARY MONUMENT		
CENTERLINE MONUMENT IN CASING		
PRIMARY R.O.W. MONUMENT		
BEARING OBJECT		
MISCELLANEOUS MONUMENT		
LINE OF SIGHT MONUMENT		
CONCRETE R.O.W. MONUMENT		
BENCHMARK		BM
REBAR AND CAP		
REBAR		
IRON PIPE		
PK NAIL		
SPIKE		
HUB AND TACK		
CONSTRUCTION CENTERLINE	5+00	
MISCELLANEOUS CENTERLINE	10+00	
STATION EQUATION	"L"48+97.23 POT BK= "O"48+97.23 PC AHD	
PROJECT RIGHT-OF-WAY LINE	R/W	
EXISTING RIGHT-OF-WAY LINE		
EXISTING PROPERTY LINE		
CONTROLLED ACCESS LINE	C/A	
UTILITY EASEMENT LINE	PUE	
TEMPORARY EASEMENT LINE (TCP OR TCE)	TCP	
ACCESS OR SECTION LINE EASEMENT	ACCESS EASEMENT	
PROPOSED CUT SLOPE LIMIT		
PROPOSED FILL SLOPE LIMIT		
SECTION LINE		
1/4 SECTION LINE		
1/16 SECTION LINE		
TOWNSHIP & RANGE LINE	T. 2 N. / T. 1 N. — T. 1 E. / T. 2 E.	

	EXISTING	PROPOSED
SANITARY SEWER (FLOW DIRECTION →)	SS	SS
FUEL LINE	O	O
GAS LINE	G	G
WATER LINE	W	W
METER, VALVE, FIRE HYDRANT	W	W
EXISTING STORM DRAIN (FLOW DIRECTION →)	SD	
PROPOSED STORM DRAIN		S-10, S-11, P-11, P-10, MH
FIBER OPTIC LINE	FO	
DIRECT BURIAL TELEPHONE CABLE	T	T
DIRECT BURIAL ELECTRIC CABLE	E	E
ELECTRIC LINE (OVERHEAD)		
POWER POLE LINE		
JOINT USE POWER & TELEPHONE		
TELEPHONE POLE LINE		
POLE ANCHOR		
STUB POLE (POWER OR TELEPHONE)		
TELEPHONE DUCT	T	T
TELEPHONE PEDESTAL		
BURIED CABLE MARKER		
PIPELINE MARKER OR VALVE		
CATCH BASIN OR DROP INLET		
MANHOLE	MH	MH
SANITARY SEWER CLEAN OUT		

	EXISTING	PROPOSED
ROADWAY/PAVEMENT EDGE		
FENCE	X	X
CURB AND GUTTER		
DETECTABLE WARNINGS		
GUARDRAIL		
CULVERT PIPE		
SIGN		
MAILBOX	MB	MB
RAILROAD TRACKS		
RAILROAD DEVICES	CROSS-BUCK, FLASHING LIGHT	CANTILEVER, SWITCH
TREE LINE		
WATER BOUNDARY		
ORDINARY HIGH WATER LINE		
FLOW CENTERLINE		
FLOW DIRECTION		
WETLANDS		
EXISTING BUILDINGS	H	H = HOUSE G = GARAGE M = MERCHANT/STORE B = BARN S = SHED P = PRIVY SS= SERVICE STATION W = WAREHOUSE
POST OR BOLLARD		
WELL OR MONITORING WELL	W	
SEPTIC PIPE	S, MW	
FUEL TANK FILL PIPE/VENT	P	
SATELLITE DISH	SAT. DISH	
TEST HOLE	TH	
CONIFER TREE		
DECIDUOUS TREE		
GRAVE		
THERMOSIPHON		
PARKING METER		
VEHICLE PLUG-IN		
DELINEATOR/GUIDE MARKER		

	EXISTING	PROPOSED
JUNCTION BOX, TYPE IA		5
JUNCTION BOX, TYPE II		6
JUNCTION BOX, TYPE III		3
LOAD CENTER		
LUMINAIRE		122
RIGID METAL CONDUIT		

LEGEND

Preliminary Plans

PLANS DEVELOPED BY: STATE OF ALASKA DEPARTMENT OF TRANSPORTATION & PUBLIC FACILITIES, NORTHERN REGION, 2301 PEGER ROAD, FAIRBANKS, AK 99709 (907)451-2200
C:\Users\jbergstrom\Desktop\Home Work Hornw\Home Rich\03 Drafting\90265_A1-A2 LEGEND Fri, Aug/07/20 01:58pm

NO.	DATE	REVISION

STATE	PROJECT DESIGNATION	YEAR	SHEET NO.	TOTAL SHEETS
ALASKA	PENDING/NFHWY00355	2020	B1	B3

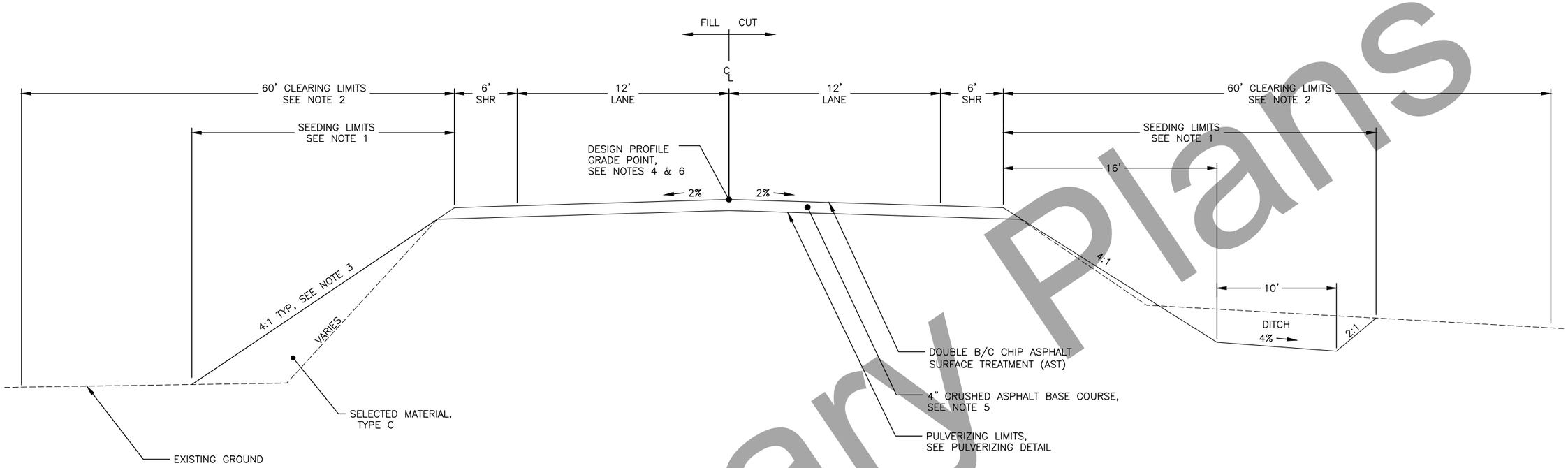

TYPICAL SECTION 1

STA "O"6195+00 TO STA "O"6704+00

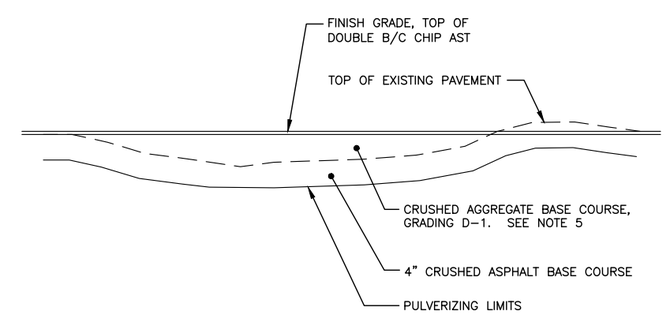

PULVERIZING DETAIL

TYPICAL SECTION 1 NOTES:

1. SEED ALL DISTURBED AREAS
2. CLEAR TO 60 FEET FROM THE EDGE OF PAVEMENT OR TO THE R/W BOUNDARY; WHICH EVER IS LESS
3. 4H:1V TYPICAL EMBANKMENT SLOPE. INCREASE EMBANKMENT SLOPE AS NEEDED TO STAY WITHIN THE R/W LIMITS
4. FOR TYPICAL SECTION 1, THE DESIGN PROFILE IS SHOWN FOR REFERENCE ONLY AND WAS USED TO GENERATE SELECTED MATERIAL, TYPE C VOLUMES. THE DESIGN PROFILE WILL NOT BE USED TO ESTABLISH THE FINISH GRADE PROFILE. SHAPE AND GRADE THE CRUSHED ASPHALT BASE COURSE ACCORDING TO SPECIFICATION SECTION 308-3.03
5. PLACE AGGREGATE BASE COURSE, GRADING D-1 (AS A LEVELING COURSE) OVER THE PULVERIZED ASPHALT PAVEMENT AT LOCATIONS IDENTIFIED AND DIRECTED BY THE ENGINEER
6. CONSTRUCT SUPERELEVATIONS AS SHOWN ON PLAN SHEET D3

Preliminary Plans

TYPICAL SECTION

PLANS DEVELOPED BY: STATE OF ALASKA DEPARTMENT OF TRANSPORTATION & PUBLIC FACILITIES, NORTHERN REGION, 2301 PEGER ROAD, FAIRBANKS, AK 99709 (907)451-2200
C:\Users\jbergstrom\Desktop\Home Work Hornw\Home Rich\03 Drafting\90265_B1-PULVERIZE AND PAVE TYPICAL SECTION Fri, Aug/07/20 01:59pm

NO.	DATE	REVISION

STATE	PROJECT DESIGNATION	YEAR	SHEET NO.	TOTAL SHEETS
ALASKA	PENDING/NFHWY00355	2020	B2	B3

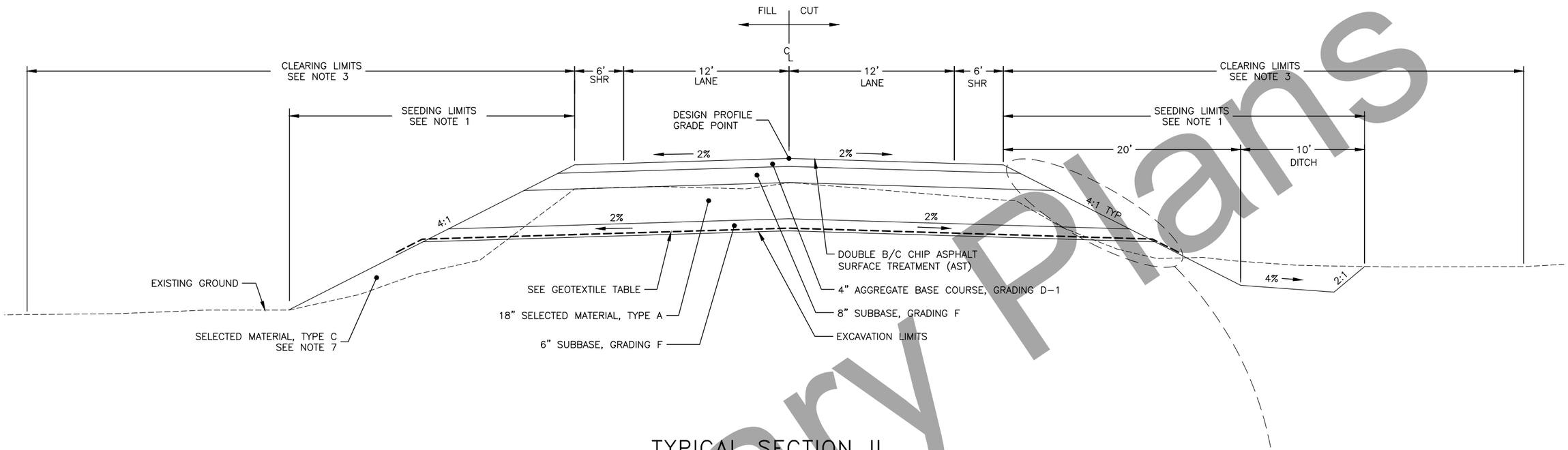

TYPICAL SECTION II

STA 6704+00 TO 6733+34
STA 6734+34 TO 6778+00

GEOTEXTILE TABLE

BEGIN	END	DESCRIPTION
6704+00	6730+00	GEOTEXTILE, WICKING FABRIC
6730+00	6733+34	GEOTEXTILE, REINFORCEMENT, TYPE 2
6734+34	6737+00	GEOTEXTILE, REINFORCEMENT, TYPE 2
6737+00	6778+00	GEOTEXTILE, WICKING FABRIC

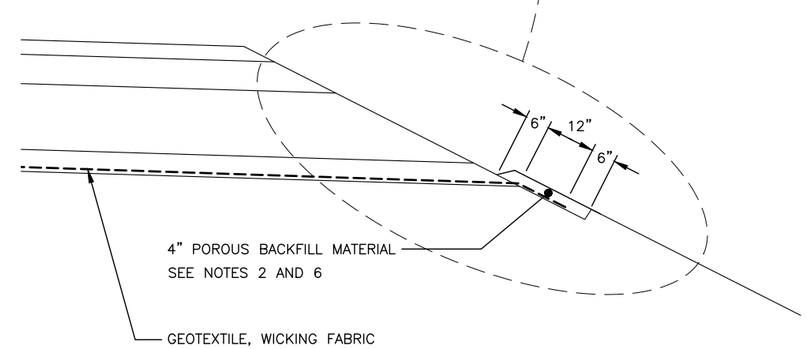

POROUS BACKFILL DETAIL

RT SIDE SHOWN; MIRROR FOR LT SIDE

TYPICAL SECTION 2 NOTES:

1. SEED ALL DISTURBED AREAS OR AS DIRECTED BY THE ENGINEER
2. SEE GEOTEXTILE, WICKING FABRIC SPECIAL PROVISION SECTION 630
3. CLEAR TO 60 FEET FROM THE EDGE OF PAVEMENT OR TO THE R/W BOUNDARY; WHICH EVER IS LESS.
4. INSTALL CULVERTS BEFORE INSTALLING GEOTEXTILE.
5. CONSTRUCT SUPERELEVATIONS AS SHOWN ON PLAN SHEET D3
6. DO NOT CONSTRUCT THE POROUS BACKFILL DETAIL IN AREAS USING GEOTEXTILE, REINFORCEMENT, TYPE 2
7. DO NOT PLACE BORROW MATERIAL UNTIL AFTER THE USABLE ROADWAY EXCAVATION HAS BEEN PLACED IN THE FILL

TYPICAL SECTION

Preliminary Plans

PLANS DEVELOPED BY: STATE OF ALASKA DEPARTMENT OF TRANSPORTATION & PUBLIC FACILITIES, NORTHERN REGION, 2301 PEGER ROAD, FAIRBANKS, AK 99709 (907)451-2200
H:\projects\rich_hwy\60638_rich_115_148\06 design\05 civil 3d\03_90265 137-148\03 Drafting\90265_B2-B2 TYPICAL SECTION Wed, Sep/30/20 12:04pm

NO.	DATE	REVISION

STATE	PROJECT DESIGNATION	YEAR	SHEET NO.	TOTAL SHEETS
ALASKA	PENDING/NFHWY00355	2020	B3	B3

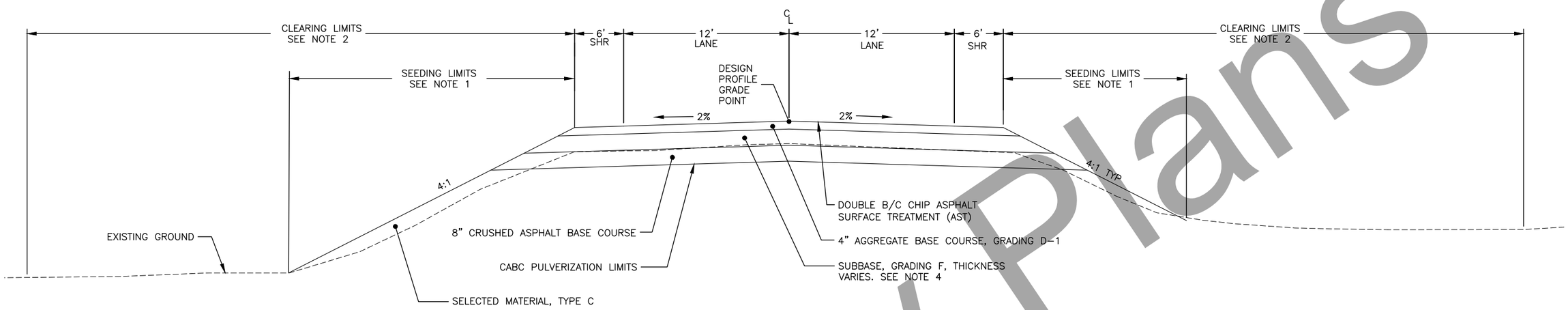

TYPICAL SECTION III

STA 6778+00 TO 6784+00

TYPICAL SECTION 3 NOTES:

1. SEED ALL DISTURBED AREAS OR AS DIRECTED BY THE ENGINEER
2. CLEAR TO 60 FEET FROM THE EDGE OF PAVEMENT OR TO THE R/W BOUNDARY; WHICH EVER IS LESS
3. CONSTRUCT SUPERELEVATIONS AS SHOWN ON PLAN SHEET D3
4. TYPICAL SECTION III IS FOR THE TRANSITION TO MATCH THE EXISTING ROAD GRADE AT THE EOP. SEE P&P SHEET F20. THE THICKNESS OF SUBBBASE, GRADING F CHANGES/TRANSITIONS FROM 24" TO 0"
5. TRANSITION EMBANKMENT SLOPES TO MATCH EXISTING AT THE EOP

Preliminary Plans

TYPICAL SECTION

PLANS DEVELOPED BY: STATE OF ALASKA DEPARTMENT OF TRANSPORTATION & PUBLIC FACILITIES, NORTHERN REGION, 2301 PEGER ROAD, FAIRBANKS, AK 99709 (907)451-2200
C:\Users\jbergstrom\Desktop\Home Work Homw\Home Rich\03 Drafting\90265_B3-B2 TYPICAL SECTION Thu, Aug/13/20 11:11am

NO.	DATE	REVISION

STATE	PROJECT DESIGNATION	YEAR	SHEET NO.	TOTAL SHEETS
ALASKA	PENDING/NFHWY00355	2020	C1	C2

ESTIMATE OF QUANTITIES

ITEM NO.	PAY ITEM	PAY UNIT	QUANTITY
201.0009.0000	CLEARING AND GRUBBING, MP 134	LUMP SUM	ALL REQUIRED
201.0009.0000	CLEARING AND GRUBBING, MP 138–148	LUMP SUM	ALL REQUIRED
202.0017.0000	REMOVAL OF CULVERT PIPE	EACH	58
202.2023.0000	PAVEMENT PLANING, COLD	SQUARE YARD	377.8
203.0003.0000	UNCLASSIFIED EXCAVATION	CUBIC YARD	23,830.8
203.0006.000A	BORROW, TYPE A	TON	45,680
203.0006.000B	BORROW, TYPE B	TON	169,600
203.0006.000C	BORROW, TYPE C	TON	237,745
205.0005.0000	CONTROLLED LOW–STRENGTH MATERIAL	CUBIC YARD	4.2
205.0007.0000	POROUS BACKFILL MATERIAL	TON	665
301.0001.00D1	AGGREGATE BASE COURSE, GRADING D–1	TON	20,850
304.0001.000F	SUBBASE, GRADING F	TON	57,370
308.0001.0000	CRUSHED ASPHALT BASE COURSE	SQUARE YARD	240,570
401.0015.0000	ASPHALT MATERIAL PRICE ADJUSTMENT	CONTINGENT SUM	ALL REQUIRED
405.2002.0000	DOUBLE B/C CHIP AST	SQUARE YARD	241,125
602.0001.0060	STRUCTURAL PLATE PIPE 60" DIAMETER, 10 GAGE	LINEAR FOOT	387
602.0001.0072	STRUCTURAL PLATE PIPE 72" DIAMETER, 10 GAGE	LINEAR FOOT	471
602.2009.0000	DEADMAN	EACH	10
603.0001.0024	24 INCH CSP	LINEAR FOOT	151
603.0001.0036	36 INCH CSP	LINEAR FOOT	5,216
603.0001.0048	48 INCH CSP	LINEAR FOOT	540
606.0001.0000	W–BEAM GUARDRAIL	LINEAR FOOT	400
606.0006.0000	REMOVING AND DISPOSING OF GUARDRAIL	LINEAR FOOT	829
606.0013.0000	PARALLEL GUARDRAIL TERMINAL	EACH	4
606.0016.0000	TRANSITION RAIL	EACH	4
610.0002.0000	DITCH LINING	TON	7,100
611.0002.0001	RIPRAP, CLASS I	TON	3,316
613.0002.0000	CULVERT MARKER POST	EACH	122
615.0001.0000	STANDARD SIGN	SQUARE FOOT	252.29
616.0002.0050	1/2 INCH DIAMETER THAW PIPE	EACH	49
618.0001.0000	SEEDING	ACRE	63
630.0003.0002	GEOTEXTILE, REINFORCEMENT, TYPE 2	SQUARE YARD	11,055
630.2002.0000	GEOTEXTILE, WICKING FABRIC	SQUARE YARD	46,160
631.0002.0001	GEOTEXTILE, EROSION CONTROL, CLASS I	SQUARE YARD	4,380
639.2000.0000	APPROACH	EACH	15
640.0001.0000	MOBILIZATION AND DEMOBILIZATION	LUMP SUM	ALL REQUIRED
640.0004.0000	WORKER MEALS AND LODGING, OR PER DIEM	LUMP SUM	ALL REQUIRED
641.0001.0000	EROSION, SEDIMENT AND POLLUTION CONTROL ADMINISTRATION	LUMP SUM	ALL REQUIRED
641.0003.0000	TEMPORARY EROSION, SEDIMENT AND POLLUTION CONTROL	LUMP SUM	ALL REQUIRED
641.0004.0000	TEMPORARY EROSION, SEDIMENT AND POLLUTION CONTROL ADDITIVES	CONTINGENT SUM	ALL REQUIRED
641.0006.0000	WITHHOLDING	CONTINGENT SUM	ALL REQUIRED
641.0007.0000	SWPPP MANAGER	LUMP SUM	ALL REQUIRED
642.0001.0000	CONSTRUCTION SURVEYING	LUMP SUM	ALL REQUIRED
642.0013.0000	THREE PERSON SURVEY PARTY	CONTINGENT SUM	ALL REQUIRED
643.0002.0000	TRAFFIC MAINTENANCE	LUMP SUM	ALL REQUIRED
643.0003.0000	PERMANENT CONSTRUCTION SIGNS	LUMP SUM	ALL REQUIRED
643.0023.0000	TRAFFIC PRICE ADJUSTMENT	CONTINGENT SUM	ALL REQUIRED
643.0025.0000	TRAFFIC CONTROL	CONTINGENT SUM	ALL REQUIRED
644.0001.0000	FIELD OFFICE	LUMP SUM	ALL REQUIRED
644.0002.0000	FIELD LABORATORY	LUMP SUM	ALL REQUIRED
644.0006.0000	VEHICLES	LUMP SUM	ALL REQUIRED
644.2002.0000	FIELD COMMUNICATIONS	CONTINGENT SUM	ALL REQUIRED
645.0001.0000	TRAINING PROGRAM, 3 TRAINEES/APPRENTICES	LABOR HOUR	1,500
670.0001.0000	PAINTED TRAFFIC MARKINGS	LUMP SUM	ALL REQUIRED

ESTIMATE LUMP SUM ITEMS

ITEM NO.	DESCRIPTION	VALUE
201.0009.0000	CLEARING AND GRUBBING, MP 134 (GRUBBING)	24.2 ACRES
201.0009.0000	CLEARING AND GRUBBING, MP 134 (CLEARING)	20.8 ACRES
201.0009.0000	CLEARING AND GRUBBING, MP 138–148 (GRUBBING)	57.3 ACRES
201.0009.0000	CLEARING AND GRUBBING, MP 138–148 (CLEARING)	104.8 ACRES

ESTIMATING FACTORS

ITEM NO.	DESCRIPTION	VALUE
203.0006.____	BORROW, ALL TYPES	2 TONS/CUBIC YARD
301.0003.00D1	AGGREGATE BASE COURSE, GRADING D–1	2 TONS/CUBIC YARD
304.0001.000F	SUBBASE, GRADING F	2 TONS/CUBIC YARD
405.2002.0000	CRS–2P ASPHALT FOR SURFACE TREATMENT	256 GALLONS/TON
405.2002.0000	CRS–2P ASPHALT FOR FIRST AGGREGATE LAYER	0.75 GALLONS/SQUARE YARD
405.2002.0000	CRS–2P ASPHALT FOR SECOND AGGREGATE LAYER	0.65 GALLONS/SQUARE YARD
405.2002.0000	GRADE B AGGREGATE FOR SURFACE TREATMENT	50 POUNDS/SQUARE YARD
405.2002.0000	GRADE C AGGREGATE FOR SURFACE TREATMENT	40 POUNDS/SQUARE YARD
610.0002.0000	DITCH LINING	2 TONS/CUBIC YARD
611.0002.0001	RIPRAP, CLASS I	1.6 TONS/CUBIC YARD
611.0002.0002	RIPRAP, CLASS II	1.6 TONS/CUBIC YARD

Preliminary Plans

ESTIMATE OF QUANTITIES

PLANS DEVELOPED BY: STATE OF ALASKA DEPARTMENT OF TRANSPORTATION & PUBLIC FACILITIES, NORTHERN REGION, 2301 PEGER ROAD, FAIRBANKS, AK 99709 (907)451–2200
H:\projects\rich_hwy\60638_rich_115_148\06 design\05 civil 3d\03_90265 137–148\03 Drafting\90265_C1–ESTIMATE OF QUANTITIES Mon, Oct/12/20 02:03pm

NO.	DATE	REVISION

STATE	PROJECT DESIGNATION	YEAR	SHEET NO.	TOTAL SHEETS
ALASKA	PENDING/NFHWY00355	2020	C2	C2

GENERAL NOTES:

1. PRIOR TO ANY GROUND DISTURBING WORK, THE CONTRACTOR SHALL FIELD LOCATE ALL UTILITIES WITHIN THE PROJECT LIMITS AND PROTECT THEM FROM DAMAGE FOR THE DURATION OF THE WORK. WHEN PROPOSED CULVERT OR RIPRAP IMPROVEMENTS ARE OVER OR WITHIN OR 2' HORIZONTALLY FROM UNDERGROUND UTILITIES, HAND EXCAVATE (POT HOLE) AND EXPOSE UNDERGROUND UTILITIES TO VERIFY THE HORIZONTAL AND VERTICAL LOCATION.

2. MATERIAL SITE MS 71-3-015-5 (SOUTH HOGAN HILL QUARRY), LOCATED AT APPROXIMATELY MP 155 ON THE RICHARDSON HIGHWAY, IS AN AVAILABLE MATERIAL SOURCE. SEE PERMIT NUMBER AA-86391 FOR SITE SPECIFIC STIPULATIONS.

   THE DEPARTMENT HAS OTHER CONSTRUCTION PROJECTS WHERE OTHER CONTRACTORS MAY CHOOSE TO USE MS 71-3-015-5. THE CONTRACTOR MUST COORDINATE AND COOPERATE WITH OTHER CONTRACTORS ACCORDING TO SPECIFICATION SECTION 105-1.07.

3. MATERIAL SITE MS 71-3-002-5 (POPLAR GROVE PIT), LOCATED AT APPROXIMATELY MP 136.5 ON THE RICHARDSON HIGHWAY, IS AN AVAILABLE MATERIAL SOURCE FOR THE EXTRACTION OF SELECTED MATERIAL, TYPE C. THIS MATERIAL SITE IS NOT EXPECTED TO PRODUCE SELECTED MATERIAL, TYPE A, TYPE B OR CRUSHED PRODUCTS DUE TO PRIOR USE AND DEPLETION OF AVAILABLE MATERIALS.

   THE DEPARTMENT'S BLM RIGHT-OF-WAY GRANT FOR THE POPLAR GROVE SITE IS ONLY VALID FOR MATERIAL EXTRACTION AND MATERIAL PRODUCTION. THE SITE IS CONSIDERED A CONTRACTOR FURNISHED SOURCE FOR ANY OTHER USE AND REQUIRES AUTHORIZATION FROM THE UNDERLYING PROPERTY OWNER (AHTNA INCORPORATED). THE CONTRACTOR IS SOLELY RESPONSIBLE FOR ALL COSTS (INCLUDING MATERIAL DISPOSAL ROYALTIES) RELATED TO ACQUIRING ALL NECESSARY RIGHTS, PERMITS, AGREEMENTS TO DEVELOP AND USE THE SITE. SEE SPECIFICATION SECTION 106-1.02

4. MATERIAL SITE MS 71-2-006-5 & MS-71-2-020-5 (RINGLING PIT), LOCATED BETWEEN MP 126 AND 127 ON THE RICHARDSON HIGHWAY, ARE EXCLUDED MATERIAL SOURCES. IN NO WAY WILL THESE MATERIAL SOURCES BE CONSIDERED FOR USE ON THIS PROJECT.

5. MATERIAL SITE MS 71-3-009-5 (NORTH HOGAN HILL QUARRY), LOCATED AT APPROXIMATELY MP 158 ON THE RICHARDSON HIGHWAY, IS AN EXCLUDED MATERIAL SOURCE.

6. FOR BASIS OF HORIZONTAL AND VERTICAL CONTROL, SEE RECORD OF SURVEY DATE 03/01/16 RICHARDSON HIGHWAY MP 115 – 148 REHABILITATION PROGRAM NO. Z606380000, PLATT #2017-9 CHITINA RECORDING DISTRICT.

LIST OF ABBREVIATIONS

AH = AHEAD
AST = ASPHALT SURFACE TREATMENT
ATM = ALASKA TRAFFIC MANUAL
AT&T = AT&T ALASCOM

BFS = BEGIN FULL SUPERELEVATION
BK = BACK
BNC = BEGIN NORMAL CROWN
BOL = BEGINNING OF LINE
BOP = BEGINNING OF PROJECT

CABC = CRUSHED ASPHALT BASE COURSE
CF = CUBIC FEET
CFS = CUBIC FEET PER SECOND
CGP = CONSTRUCTION GENERAL PERMIT
CL OR ℄ = CENTERLINE
CLR = CLEAR DISTANCE
CMP = CORRUGATED METAL PIPE
COM = COMMERCIAL
CSP = CORRUGATED STEEL PIPE
CVTC = COPPER VALLEY TELEPHONE COOPERATIVE
CY = CUBIC YARD

D = DEGREE OF CURVE
DIA OR ø = DIAMETER
DWG = DRAWING

EA = EACH
EFS = END FULL SUPERELEVATION
EG = EXISTING GROUND
ELEV = ELEVATION
ENC = END NORMAL CROWN
EOL = END OF LINE
EOP = END OF PROJECT
EOTW = EDGE OF TRAVELED WAY
EP = EDGE PAVEMENT
EPAV = EDGE OF PAVEMENT

FO = FIBER OPTIC CABLE
FT OR ' = FOOT, FEET

GA = GAUGE
GAL = GALLON
GALV = GALVANIZED
GP = GRADE POINT
GPR = GROUND PENETRATING RADAR

HMA = HOT MIX ASPHALT
HT = HEIGHT
HW/D = HIGH WATER/DIAMETER OF PIPE
HWY = HIGHWAY

IE = INVERT ELEVATION
IN OR " = INCH, INCH

L = LENGTH OF CURVE
LB = POUND
LC = LEVEL CROWN
LF = LINEAR FEET
LT = LEFT
LVC = LENGTH OF VERTICAL CURVE

MAX = MAXIMUM
MIN = MINIMUM
MP = MILEPOST

NC = NORMAL CROWN
NIC = NOT IN CONTRACT
NO. OR # = NUMBER
NTS = NOT TO SCALE
N/A = NOT APPLICABLE

PC = POINT OF CURVATURE
PCC = POINT OF COMPOUND CURVE
PI = POINT OF INTERSECTION
POC = POINT ON CURVE
POT = POINT ON TANGENT
PRC = POINT OF REVERSE CURVATURE
PST = PERFORATED STEEL TUBE
PT = POINT OF TANGENCY
PVMT = PAVEMENT

Q2 = 2 YEAR FLOOD
Q5 = 5 YEAR FLOOD
Q50 = 50 YEAR FLOOD
Q100 = 100 YEAR FLOOD

R/W = RIGHT-OF-WAY
R = RADIUS
RAP = RECLAIMED ASPHALT PAVEMENT
RC = REVERSE CROWN
RD = ROAD
REQ = REQUIRED
RP = RADIUS POINT
RT = RIGHT

S = SUPERELEVATION
SHR = SHOULDER
SHT = SHEET
SIM = SIMILAR
SPP = STRUCTURAL PLATE PIPE
SQ.IN.=OR IN^2 = SQUARE INCHES
SQ.FT. OR FT^2 OR SF = SQUARE FEET
STA = STATION
STD = STANDARD
SY = SQUARE YARD
SYM = SYMBOL

T = TANGENT LENGTH
TBM = TEMPORARY BENCH MARK
TCE = TEMPORARY CONSTRUCTION EASEMENT
TCP = TEMPORARY CONSTRUCTION PERMIT
TRANS = TRANSITION
TYP = TYPICAL

VC = VERTICAL CURVE
VPC = VERTICAL POINT OF CURVATURE
VPI = VERTICAL POINT OF INTERSECTION
VPT = VERTICAL POINT OF TANGENCY
VOL = VOLUME

W/ = WITH
W/O = WITHOUT

@ = AT
& = AND
DDD.DDDDD° = DECIMAL DEGREES (TO FIVE DECIMAL PLACES)
DD°MM'SS" = DEGREES, MINUTES, SECONDS
Δ = DELTA ANGLE

Preliminary Plans

GENERAL NOTES

PLANS DEVELOPED BY: STATE OF ALASKA DEPARTMENT OF TRANSPORTATION & PUBLIC FACILITIES, NORTHERN REGION, 2301 PEGER ROAD, FAIRBANKS, AK 99709 (907)451-2200
H:\projects\rich_hwy\60638_rich_115_148\06 design\05 civil 3d\03_90265 137-148\03 Drafting\general notes-Hwy-Gen Tue, Oct/13/20 08:19am

NO.	DATE	REVISION

STATE	PROJECT DESIGNATION	YEAR	SHEET NO.	TOTAL SHEETS
ALASKA	PENDING/NFHWY00355	2020	D1	D3

GUARDRAIL SUMMARY

BEGIN STATION	END STATION	LT/RT	606.0001.0000 W-BEAM GUARDRAIL (FEET)	606.0013.0000 PARALLEL GUARDRAIL TERMINAL (EACH)	606.0016.0000 TRANSITION RAIL (EACH)	REMARKS
±"0"6731+14	"0"6731+64	RT		1		
"0"6731+64	"0"6733+14	RT	150			
"0"6733+14	"0"6733+34±	RT			1	
±"0"6732+14	"0"6732+64	LT		1		
"0"6732+64	"0"6733+14	LT	50			
"0"6733+14	"0"6733+34±	LT			1	
±"0"6734+34	"0"6734+54	RT			1	
"0"6734+54	"0"6735+04	RT	50			
"0"6735+04	"0"6735+54±	RT		1		
±"0"6734+34	"0"6734+54	LT			1	
"0"6734+54	"0"6736+04	LT	150			
"0"6736+04	"0"6736+54±	LT		1		
		TOTAL	400	4	4	

GUARDRAIL REMOVAL SUMMARY

BEGIN STATION	ENDING STATION	LT/RT	LENGTH (ft)
±"0"6730+89	"0"6733+34±	RT	245
±"0"6731+65	"0"6733+34±	LT	169
±"0"6734+34	"0"6736+04±	RT	170
±"0"6734+34	"0"6736+79±	LT	245
		TOTAL	829

Preliminary Plans

GUARDRAIL SUMMARY

PLANS DEVELOPED BY: STATE OF ALASKA DEPARTMENT OF TRANSPORTATION & PUBLIC FACILITIES, NORTHERN REGION, 2301 PEGER ROAD, FAIRBANKS, AK 99709 (907)451-2200
H:\projects\rich_hwy\60638_rich_115_148\06 design\05 civil 3d\03_90265 137-148\03 Drafting\02-D1 GUARDRAIL SUMMARY & DETAILS Tue, Sep/29/20 11:35am

NO.	DATE	REVISION

STATE	PROJECT DESIGNATION	YEAR	SHEET NO.	TOTAL SHEETS
ALASKA	PENDING/NFHWY00355	2020	D2	D3

GENERAL GUARDRAIL NOTES:

1. FOR PARALLEL GUARDRAIL TERMINALS, CONSTRUCT THE GUARDRAIL TERMINAL WIDENING IN ACCORDANCE WITH THE "STANDARD DETAIL" ON STANDARD PLAN G-20.12. THE END OFFSET (X) SHALL BE 2 FEET. DO NOT USE THE "ALTERNATE DETAIL" ON THIS PROJECT.
2. IN ADDITION TO THE GUARDRAIL REFLECTORS, INSTALL GUARDRAIL FLEXIBLE DELINEATORS AS SHOWN ON STANDARD PLAN G-00.05 SHEET V5.
3. SEE STANDARD PLAN G-05.11S (W-31) 31" HIGH GUARDRAIL
4. GUARDRAIL LENGTHS ARE APPROXIMATE AND MAY BE ADJUSTED IN THE FIELD BY THE ENGINEER
5. GUARDRAIL/BRIDGE RAIL CONNECTION STATIONS DO NOT INCLUDE REQUIRED OVERLAP ON THE BRIDGE RAIL. SEE BRIDGE PLAN SHEETS (N1 & N2) FOR DETAILS
6. ALL WORK AND MATERIAL REQUIRED TO INSTALL GUARDRAIL MARKER POSTS IS SUBSIDIARY TO 606 PAY ITEMS.

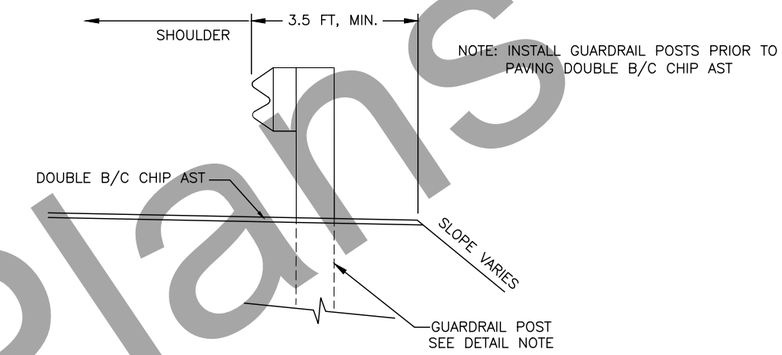

GUARDRAIL WIDENING DETAIL
APPLIES TO ALL W-BEAM GUARDRAIL

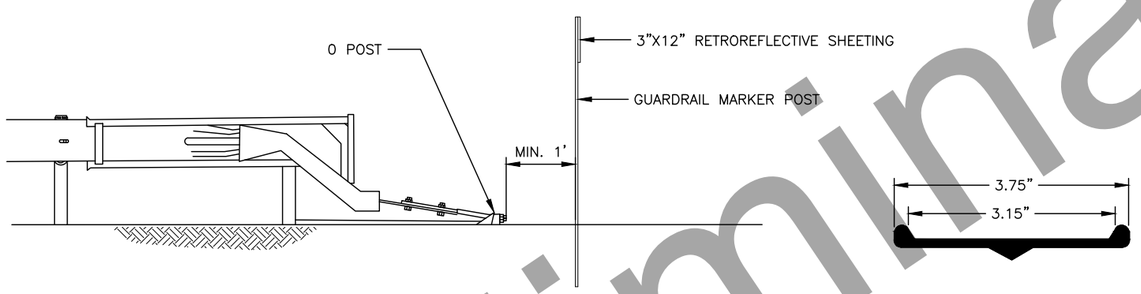

POST DETAIL
CROSS-SECTIONAL VIEW

GUARDRAIL MARKER POST INSTALLATION DETAIL 1
PARALLEL GUARDRAIL TERMINAL

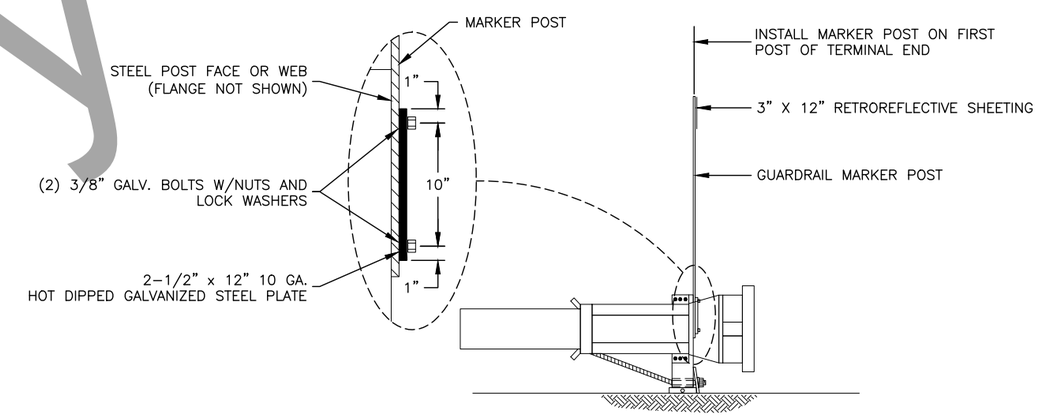

GUARDRAIL MARKER POST ATTACHMENT DETAIL 2
PARALLEL GUARDRAIL TERMINAL

INSTALLATION DETAIL 1 NOTES:

1. GUARDRAIL MARKER POSTS SHALL BE YELLOW AND AT LEAST 78" LONG. POSTS SHALL MEET THE REQUIREMENTS OF SECTION 730-2.05 FLEXIBLE DELINEATOR POSTS.
2. RETROREFLECTIVE SHEETING SHALL MEET ASTM D4956 REQUIREMENTS FOR TYPE VIII, IX, OR XI. COLOR OF RETROREFLECTIVE SHEETING SHALL MATCH COLOR OF ADJACENT EDGE LINE STRIPE. PLACE RETROREFLECTIVE SHEETING ON SIDE OF MARKER POST FACING TRAFFIC IN ADJACENT LANE.
3. DRIVE GUARDRAIL MARKER POST 18" INTO GROUND.
4. PLACE CENTER OF MARKER POST IN LINE WITH TRAFFIC SIDE OF 0 POST.

INSTALLATION 2 DETAIL NOTES:

1. GUARDRAIL MARKER POSTS SHALL BE YELLOW AND AT LEAST 72" LONG. POSTS SHALL MEET THE REQUIREMENTS OF SECTION 730-2.05 FLEXIBLE DELINEATOR POSTS.
2. RETROREFLECTIVE SHEETING SHALL MEET ASTM D4956 REQUIREMENTS FOR TYPE XI. COLOR OF RETROREFLECTIVE SHEETING SHALL MATCH COLOR OF ADJACENT EDGE LINE STRIPE. PLACE RETROREFLECTIVE SHEETING ON SIDE OF MARKER POST FACING TRAFFIC IN ADJACENT LANE.

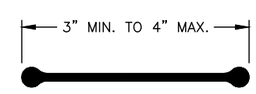

POST DETAIL
CROSS-SECTIONAL VIEW

GUARDRAIL DETAILS

Preliminary Plans

PLANS DEVELOPED BY: STATE OF ALASKA DEPARTMENT OF TRANSPORTATION & PUBLIC FACILITIES, NORTHERN REGION, 2301 PEGER ROAD, FAIRBANKS, AK 99709 (907)451-2200
H:\projects\rich_hwy\60638_rich_115_148\06 design\05 civil 3d\03_90265 137-148\03 Drafting\Sheet D3-Hwy-Gen Wed, Oct/07/20 04:17pm

NO.	DATE	REVISION

STATE	PROJECT DESIGNATION	YEAR	SHEET NO.	TOTAL SHEETS
ALASKA	PENDING/NFHWY00355	2020	D3	D3

SUPERELEVATION SUMMARY

CURVE PI	RADIUS (FEET)	BEGIN TRANSITION	TRANSITION LENGTH(FEET)	CURVE PC	BEGIN FULL SUPERELEVATION	SUPERELEVATION RATE (%)	END FULL SUPERELEVATION	CURVE PT	TRANSITION LENGTH(FEET)	END TRANSITION	REMARKS
"0"6216+01.99	2864.79	"0"6200+95.00	200	"0"6202+48.21	"0"6202+95.00	5.0	"0"6227+35.00	"0"6227+77.57	200	"0"6229+35.00	
"0"6268+80.87	4316.00	"0"6245+05.00	160	"0"6246+33.16	"0"6246+65.00	3.8	"0"6287+50.00	"0"6287+77.70	160	"0"6289+10.00	
"0"6299+81.80	2450.00	"0"6293+85.00	205	"0"6295+43.87	"0"6295+90.00	5.4	"0"6303+70.00	"0"6304+10.57	205	"0"6305+75.00	
"0"6317+53.27	2411.00	"0"6309+35.00	210	"0"6310+97.76	"0"6311+45.00	5.6	"0"6323+35.00	"0"6323+77.84	210	"0"6325+45.00	
"0"6343+59.68	3819.72	"0"6339+30.94	175	"0"6340+66.44	"0"6341+05.94	4.2	"0"6346+19.24	"0"6346+51.78	175	"0"6348+94.24	
"0"6401+72.48	2864.79	"0"6390+49.18	195	"0"6392+01.41	"0"6392+44.18	5.0	"0"6410+34.18	"0"6410+73.91	195	"0"6412+29.18	
"0"6428+90.32	4583.66	"0"6413+64.18	155	"0"6414+85.20	"0"6415+19.18	3.6	"0"6441+86.34	"0"6442+12.07	155	"0"6443+41.34	
"0"6466+88.42	5620.00	"0"6451+55.00	145	"0"6452+67.99	"0"6452+95.00	3.2	"0"6480+25.00	"0"6480+50.57	145	"0"6481+70.00	
"0"6505+75.76	1909.86	"0"6497+90.44	220	"0"6499+59.09	"0"6500+10.44	6.0	"0"6511+05.44	"0"6511+52.06	220	"0"6513+25.44	
"0"6547+69.19	1909.86	"0"6542+30.44	225	"0"6544+01.78	"0"6544+55.44	6.0	"0"6550+80.44	"0"6551+27.73	225	"0"6553+00.44	
"0"6579+70.32	1657.00	"0"6573+75.44	225	"0"6575+43.44	"0"6575+95.44	6.0	"0"6583+30.44	"0"6583+79.02	225	"0"6585+55.44	
"0"6595+65.20	1657.00	"0"6586+85.44	225	"0"6588+57.57	"0"6589+10.44	6.0	"0"6601+45.44	"0"6601+95.13	225	"0"6603+70.44	
"0"6628+29.92	2546.48	"0"6615+70.44	205	"0"6617+29.88	"0"6617+75.44	5.4	"0"6637+65.44	"0"6638+06.64	205	"0"6639+70.44	
"0"6647+02.66	1909.86	"0"6641+60.44	225	"0"6643+31.58	"0"6643+85.44	6.0	"0"6650+15.44	"0"6650+64.61	225	"0"6652+40.44	
"0"6659+21.99	2291.83	"0"6654+95.44	210	"0"6656+60.00	"0"6657+10.44	5.6	"0"6661+35.44	"0"6661+81.70	210	"0"6663+50.44	
"0"6691+78.00	2291.83	"0"6682+90.44	210	"0"6684+54.63	"0"6685+05.44	5.6	"0"6698+10.44	"0"6698+56.01	210	"0"6700+25.44	
"0"6721+29.28	2296.00	"0"6715+90.44	210	"0"6717+50.56	"0"6718+00.44	5.6	"0"6724+55.44	"0"6725+01.24	210	"0"6726+70.44	
"0"6752+94.94	2864.79	"0"6741+10.44	200	"0"6742+63.93	"0"6743+10.44	5.0	"0"6762+05.44	"0"6762+43.26	200	"0"6764+00.44	
"0"6773+24.99	2151.00	"0"6767+20.44	215	"0"6768+87.72	"0"6769+40.44	5.8	"0"6777+05.44	"0"6777+50.50	215	"0"6779+20.44	

NOTE: SUPERELEVATION ROTATION SHALL BE PER STANDARD PLAN I-81.00, CASE I, PAVEMENT ROTATED ABOUT THE CENTERLINE.

Preliminary Plans

SUPERELEVATION SUMMARY

PLANS DEVELOPED BY: STATE OF ALASKA DEPARTMENT OF TRANSPORTATION & PUBLIC FACILITIES, NORTHERN REGION, 2301 PEGER ROAD, FAIRBANKS, AK 99709 (907)451-2200
C:\Users\Ubergstrom\Desktop\Home Work Homw\Home Rich\03 Drafting\SUPER ELEV-02 SUPERELEVATION SUMMARY Mon, Aug/17/20 02:20pm

NO.	DATE	REVISION

STATE	PROJECT DESIGNATION	YEAR	SHEET NO.	TOTAL SHEETS
ALASKA	PENDING/NFHWY00355	2020	E1	E10

CULVERT SUMMARY

STATION	MP	SKEW	NEW CULVERT 24" CSP 12 GA (FEET)	NEW CULVERT 36" CSP 10 GA (FEET)	NEW CULVERT 48" CSP 10 GA (FEET)	NEW CULVERT 60" SPP 10 GA (FEET)	NEW CULVERT 72" SPP 10 GA (FEET)	DEADMAN (EACH)	RIPRAP CLASS I (CU. YD)	MARKER POST (EACH)	½" THAW PIPE (EACH)	REMARKS	AS-BUILT CENTERLINE LOCATION (SEE NOTE 1) STATION	LATITUDE	LONGITUDE
6210+58	137.6	0								2		EXISTING 24" X 76' CULVERT TO REMAIN			
6214+08	137.8	0		97					34	2					
6215+08	137.8	0		97					34	2	1				
6218+11	137.9	0		130					34	2	1				
6222+45	138	7° RT AH					157	1	121	2	1				
6231+14	138.2	20° RT AH								2	1	EXISTING 144" X 134' CULVERT TO REMAIN			
6238+80	138.3	5° LT AH									1	EXISTING 24" X 50' CULVERT AT APPROACH A2 TO REMAIN			
6241+40	138.4	0		83					34	2	1				
6255+45	138.6	0		94					34	2	1				
6274+08	138.9	0		85					34	2	1				
6278+07	139.1	0		100					34	2	1				
6284+20	139.2	0	70						17			APPROACH A3 CULVERT			
6289+75	139.3	0		125					34	2	1	EQUALIZATION CSP 1865.6 ELEV			
6304+68	139.5	0		94					34	2	1				
6307+48	139.6	0		99					34	2	1				
6316+82	139.7	0			152			1	58	2	1				
6321+39	139.8	0			119			1	58	2	1				
6325+80	139.9	0		103					34	2	1				
6329+80	140.1	0		115					34	2	1				
6342+82	140.2	0								2	1	EXISTING 36" X 137' CULVERT TO REMAIN			
6357+65	140.6	0		90					34	2					
6366+08	140.7	0		83					34	2					
6366+80	140.7	0										EXISTING 24" X 40' CULVERT AT APPROACH A4 TO REMAIN			
6379+97	140.9	0								2		EXISTING 24" X 78' CULVERT TO REMAIN			
6390+68	141.2	0										EXISTING 24" X 45' CULVERT AT APPROACH A5 TO REMAIN			
6394+82	141.3	0		91					34	2	1				
6400+70	141.4	0										EXISTING 24" X 74' CULVERT AT TURNOUT T4 TO REMAIN			
6407+75	141.5	0		100					34	2	1				
6411+80	141.6	0		74					34	2	1				
6414+92	141.6	0		98					34	2	1				
6422+81	141.8	0		82					34	2	1				
6431+16	141.9	0		102					34	2	1				
6447+04	142.2	0		113					34	2	1				
6461+34	142.5	0		93					34	2	1				
6473+68	142.7	0					160	1	130	2	1				
6473+78	142.7	0		135						2	1	SET PIPE INVERT AT CROWN ELEVATION OF MAIN 72 INCH PIPE			
6478+30	142.8	0										EXISTING 24" X 48' CULVERT AT APPROACH A6 TO REMAIN			
6485+00	142.9	0		123					34	2	1				
6500+25	143.2	0										EXISTING 24" X 50' CULVERT AT APPROACH A7 TO REMAIN			
6506+25	143.3	0		156					34	2					
6507+97	143.4	23° RT AH					154	1	121	2	1	SEE CULVERT SKEW DETAILS ON SHEET E5			
6520+35	143.6	0		112					34	2	1				
6527+71	143.7	0		161					34	2	1				
6533+21	143.9	0		193					34	2	1				
6547+70	144.2	0		107					34	2	1				
SUB-TOTAL			70	3135	271	0	471	5	1457	76	33				

Preliminary Plans

CULVERT SUMMARY

PLANS DEVELOPED BY: STATE OF ALASKA DEPARTMENT OF TRANSPORTATION & PUBLIC FACILITIES, NORTHERN REGION, 2301 PEGER ROAD, FAIRBANKS, AK 99709 (907)451-2200
C:\Users\Jbergstrom\Desktop\Home Work Hornw\Home Rich\03 Drafting\90265_Culverts-E1 CULVERT SUMMARY Mon, Aug/17/20 02:20pm

NO.	DATE	REVISION

STATE	PROJECT DESIGNATION	YEAR	SHEET NO.	TOTAL SHEETS
ALASKA	PENDING/NFHWY00355	2020	E2	E10

CULVERT SUMMARY

STATION	MP	SKEW	NEW CULVERT 24" CSP 12 GA (FEET)	NEW CULVERT 36" CSP 10 GA (FEET)	NEW CULVERT 48" CSP 10 GA (FEET)	NEW CULVERT 60" SPP 10 GA (FEET)	NEW CULVERT 72" SPP 10 GA (FEET)	DEADMAN (EACH)	RIPRAP CLASS I (CU. YD)	MARKER POST (EACH)	½" THAW PIPE (EACH)	REMARKS	AS-BUILT CENTERLINE LOCATION (SEE NOTE 1) STATION	LATITUDE	LONGITUDE
6556+02	144.3	0		109					34	2	1				
6557+69	144.4	0		105					34	2	1				
6574+70	144.7	0		137					34	2	1				
6578+58	144.8	0		145					34	2	1				
6585+53	144.9	0		90					34	2	1				
6596+66	145.1	0			180			1	58	2					
6611+24	145.3	0		90					34	2	1				
6624+38	145.6	10° LT AH				138		1	87	2	1				
6628+73	145.7	0				96		1	87	2	1				
6633+00	145.8	0			89			1	58	2					
6647+05	146.1	0		119					34	2					
6656+08	146.2	0		113					34	2					
6661+55	146.3	0		121					34	2	1				
6674+45	146.5	0		111					34	2	1				
6677+84	146.7	0		98					34	2	1				
6689+53	146.8	0		111					34	2					
6696+56	146.9	0		113					34	2	1				
6699+61	147.1	0	81						17			CULVERT DRAINS SEPARATED TURNOUT T5			
6721+80	147.5	0										EXISTING 36" X 94' CULVERT AT APPROACH A8 TO REMAIN			
6729+54	147.6	0		116					34	2					
6737+40	147.7	0										EXISTING 36" X 48' CULVERT AT APPROACH A10 TO REMAIN			
6748+15	147.9	0		127					34	2	1				
6756+79	148.1	28° LT AH		124					34	2	1				
6760+89	148.2	9° LT AH		113					34	2					
6767+17	148.3	12° RT AH				153		1	108	2	1	SEE SPECIAL CHANNEL SECTIONS ON SHEET E7			
6767+32	148.3	12° RT AH		139					39	2	1	SET PIPE INVERT AT CROWN ELEVATION OF 6767+17 PIPE			
SUB-TOTAL			81	2081	269	387	0	5	1032	46	16				
TOTAL			151	5,216	540	387	471	10	2,423	122	49				

CULVERT NOTES:

1. THE CONTRACTOR SHALL ENTER AS-BUILT LOCATIONS FOR ALL CULVERTS IN THE CULVERT SUMMARY TABLE. COORDINATES SHALL BE LOCATED AT THE INTERSECTION OF THE CULVERT AND ROAD CENTERLINE. USE NAD83 DATUM FORMATTED TO DECIMAL DEGREES TO A PRECISION OF 5 DECIMAL PLACES (DD.DDDDD). THIS WORK IS SUBSIDIARY TO 642 SERIES PAY ITEMS.
2. WHEN DEADMANS ARE SHOWN ON THE CULVERT SUMMARY TABLE(S), INSTALL THE DEADMAN ON THE INLET SIDE OF THE CULVERT.
3. ALL CSP CULVERTS INSTALLED SHALL HAVE ALUMINUM-COATED STEEL. SEE STD SPEC SECTION 707-2.01.
4. STATIONING AND SKEW FOR CULVERTS ARE APPROXIMATE. STAKE CULVERTS TO FIT FIELD CONDITIONS AND AS DIRECTED BY THE ENGINEER.
5. MINIMUM ALLOWABLE CULVERT CROSS SLOPE IS 0.5%, UNLESS NOTED OTHERWISE ON THE PLANS.
6. ESTABLISH RIPRAP APRONS AND FORESLOPES AS SOON AS POSSIBLE AS PERMANENT EROSION CONTROL.
7. GEOTEXTILE, EROSION CONTROL SHALL BE PLACED SO THAT IT IS NOT VISIBLE UPON PROJECT COMPLETION.
8. FOLLOW MANUFACTURER'S INSTALLATION SPECIFICATIONS IN ALL CULVERT INSTALLATIONS.
9. CULVERTS SHALL BE NOT BE INSTALLED IN WATER.
10. CULVERT LENGTHS ARE APPROXIMATE AND SHALL BE FIELD VERIFIED BY THE CONTRACTOR.
11. IN AREAS OF POOR FOUNDATION, SUBEXCAVATE BENEATH CULVERTS TO PROVIDE ADEQUATE FOUNDATION, AS DIRECTED BY THE ENGINEER.
12. CULVERTS SHALL NOT BE INSTALLED IN WINTER CONDITIONS.
13. ALL CULVERTS SHALL HAVE A MINIMUM CAMBER EQUAL TO 1% OF THE LENGTH OF THE PIPE.
14. NO CULVERT SHALL BE PLACED UNTIL THE BED IT WILL LAY IN HAS BEEN APPROVED BY THE ENGINEER.

Preliminary Plans

CULVERT SUMMARY

PLANS DEVELOPED BY: STATE OF ALASKA DEPARTMENT OF TRANSPORTATION & PUBLIC FACILITIES, NORTHERN REGION, 2301 PEGER ROAD, FAIRBANKS, AK 99709 (907)451-2200
C:\Users\jbergstrom\Desktop\Home Work Homw\Home Rich\03 Drafting\90265_Culverts-E2 CULVERT SUMMARY Mon, Aug/17/20 02:21pm

NO.	DATE	REVISION

STATE	PROJECT DESIGNATION	YEAR	SHEET NO.	TOTAL SHEETS
ALASKA	PENDING/NFHWY00355	2020	E3	E10

202.0017.0000 REMOVAL OF CULVERT PIPE

STATION	MP	CULVERT REMOVAL			REMARKS
		24" CMP (FEET)	36" CMP (FEET)	48" CMP (FEET)	
6214+08	137.8	78			
6215+08	137.8	82			
6218+11	137.9	96			
6222+34	138.0			99	
6241+39	138.4	66			
6255+45	138.6		94		
6274+07	138.9	80			
6278+07	139.1	91			
6284+20	139.2	50			APPROACH PIPE
6289+75	139.3	95			
6304+68	139.5	88			
6307+48	139.6	75			
6316+82	139.7		130		
6321+39	139.8		86		
6325+80	139.9	87			
6329+80	140.1		102		
6357+65	140.6	67			
6366+08	140.7	83			
6394+82	141.3		81		
6407+75	141.5	77			
6411+79	141.6	67			
6414+92	141.6		85		
6422+81	141.8	77			
6431+16	141.9		85		
6447+04	142.2		86		
6461+34	142.5	81			
6473+70	142.7			134	
6485+06	142.9		101		
6506+25	143.3	123			
6507+98	143.4			97	
6520+35	143.6		85		
6527+71	143.7		140		
6533+21	143.9		148		
6547+70	144.2		100		
6556+02	144.3		108		
6557+69	144.4	87			
6574+70	144.7		137		
6578+58	144.8		129		
6585+53	144.9	75			
6596+67	145.1		136		
6611+24	145.3		84		
6624+41	145.6		119		
6628+73	145.7		91		
6633+00	145.8	85			
6647+05	146.1	95			
6656+08	146.2		92		
6661+55	146.3	92			
6674+45	146.5		92		
6677+84	146.7	88			
6689+55	146.8	85			
6696+56	146.9		113		
6699+61	147.1	81			
6729+54	147.6		105		
6748+15	147.9	109			
6756+79	148.1		110		
6761+04	148.2		88		
6767+23	148.3		103		
6767+37	148.3		101		
SUB-TOTAL		2100	2931	330	

Preliminary Plans

CULVERT REMOVAL SUMMARY

PLANS DEVELOPED BY: STATE OF ALASKA DEPARTMENT OF TRANSPORTATION & PUBLIC FACILITIES, NORTHERN REGION, 2301 PEGER ROAD, FAIRBANKS, AK 99709 (907)451-2200
C:\Users\jbergstrom\Desktop\Home Work Homw\Home Rich\03 Drafting\90265_Culverts-E3 CULVERT REMOVAL SUMMARY Fri, Aug/07/20 02:06pm

NO.	DATE	REVISION

STATE	PROJECT DESIGNATION	YEAR	SHEET NO.	TOTAL SHEETS
ALASKA	PENDING/NFHWY00355	2020	E4	E10

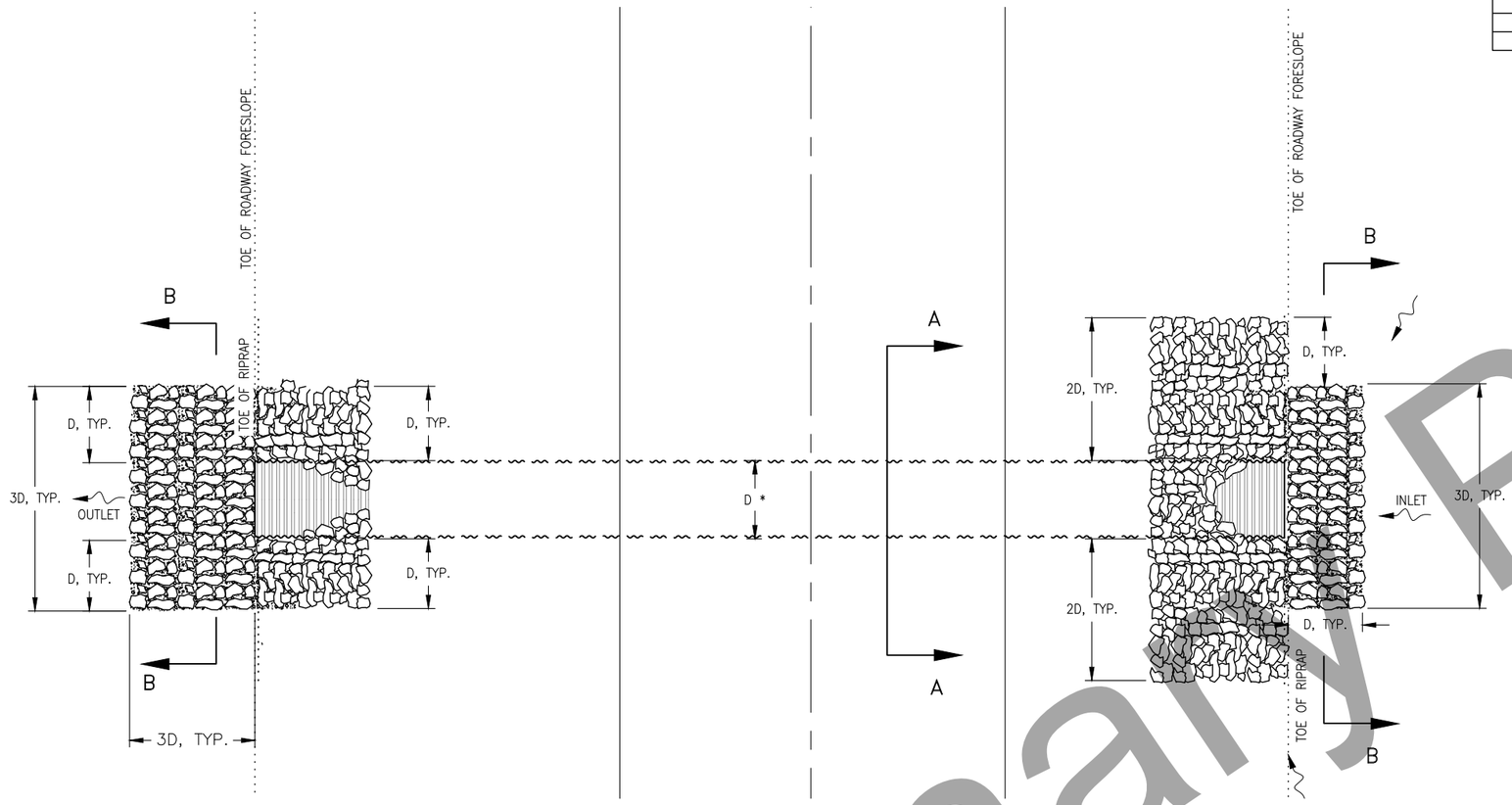

CULVERT RIPRAP APRON – TYPICAL PLAN VIEW

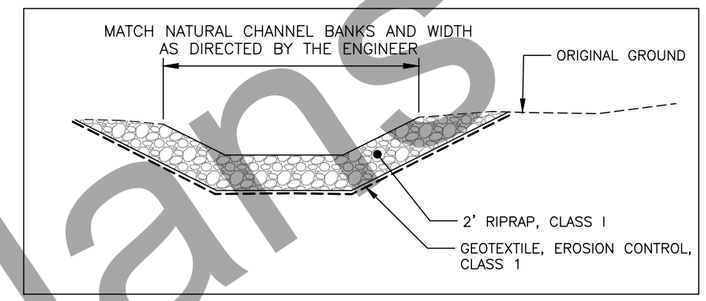

SECTION B–B

EMBANKMENT WARP AND CULVERT APRON NOTES:

1. EROSION CONTROL STRUCTURES MAY BE FIELD ADJUSTED BY THE ENGINEER TO TAKE ADVANTAGE OF EXISTING CHANNEL TOPOGRAPHY.
2. CULVERT RIPRAP APRON DETAILS SHOWN ON THIS SHEET ARE SCHEMATIC AND NOT TO SCALE.
3. COUNTERSINK RIPRAP BY EXCAVATING BELOW THE EXISTING GROUND SURFACE AND EMBANKMENT FINISH GRADE WHERE RIPRAP IS REQUIRED. BACKFILL WITH SPECIFIED DEPTH AND CLASS OF RIPRAP AS SHOWN; THIS WORK IS SUBSIDIARY TO 611 PAY ITEM. THE TOP OF RIPRAP SHALL BE FLUSH WITH THE ADJACENT DITCH CHANNEL AND/OR EXISTING GROUND.

* D = CULVERT DIAMETER

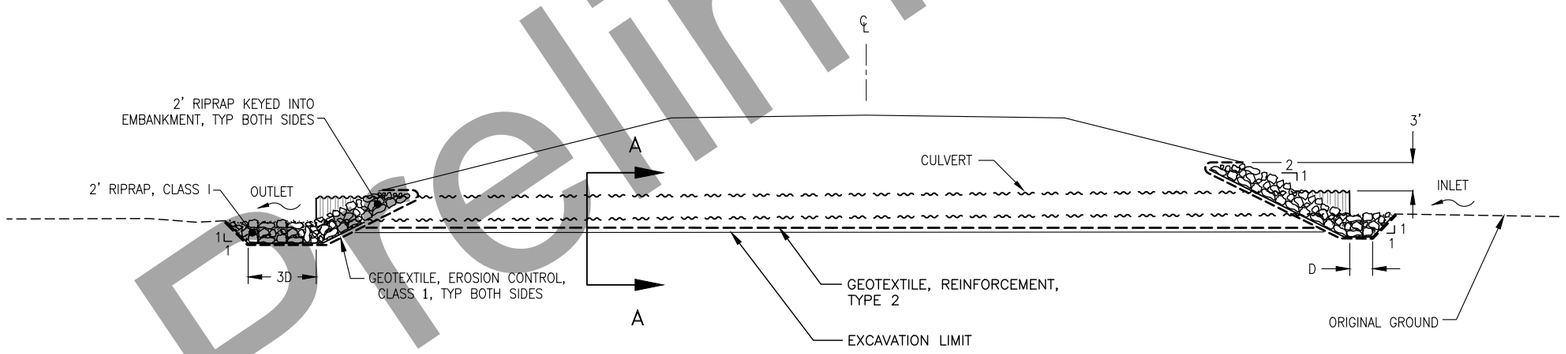

CULVERT RIPRAP APRON – ELEVATION VIEW

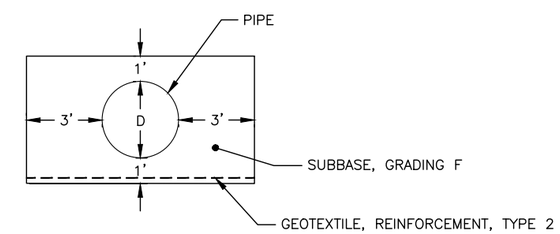

SECTION A–A

SECTION A–A NOTES:

CULVERT EXCAVATION LIMITS ARE NOT SHOWN. THE CONTRACTOR IS RESPONSIBLE FOR THE MEANS, METHODS, TECHNIQUES, SEQUENCE AND PROCEDURES OF CONSTRUCTION, SAFETY AND QUALITY CONTROL.

CULVERT AND RIPRAP APRON DETAILS

Preliminary Plans

PLANS DEVELOPED BY: STATE OF ALASKA DEPARTMENT OF TRANSPORTATION & PUBLIC FACILITIES, NORTHERN REGION, 2301 PEGER ROAD, FAIRBANKS, AK 99709 (907)451-2200
C:\Users\jbergstrom\Desktop\Home Work Horrw\Home Rich\03 Drafting\Apron Details-EMBANKMENT WARP & CULVERT APRON DETAILS Fri, Aug/07/20 02:08pm

NO.	DATE	REVISION

STATE	PROJECT DESIGNATION	YEAR	SHEET NO.	TOTAL SHEETS
ALASKA	PENDING/NFHWY00355	2020	E5	E10

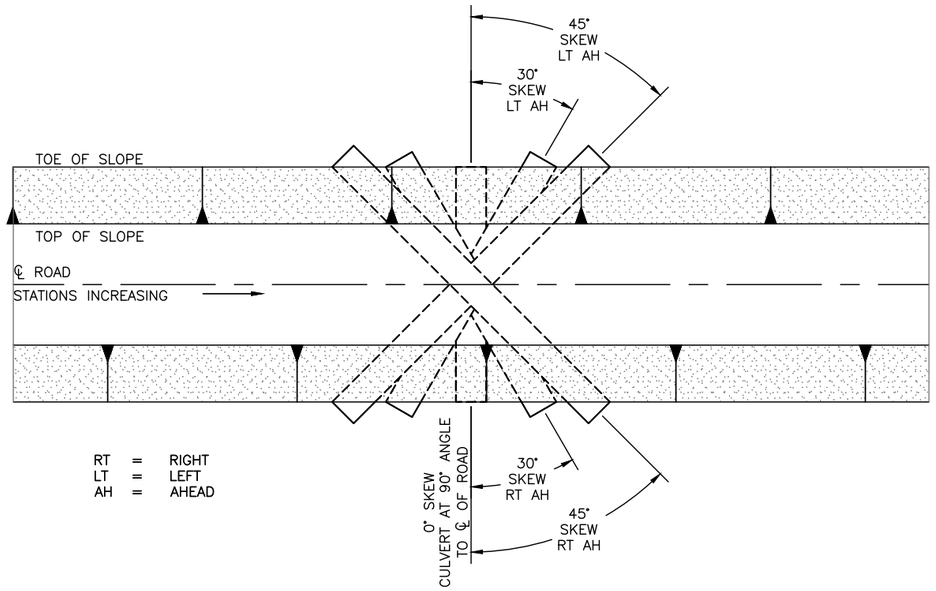

CULVERT SKEW

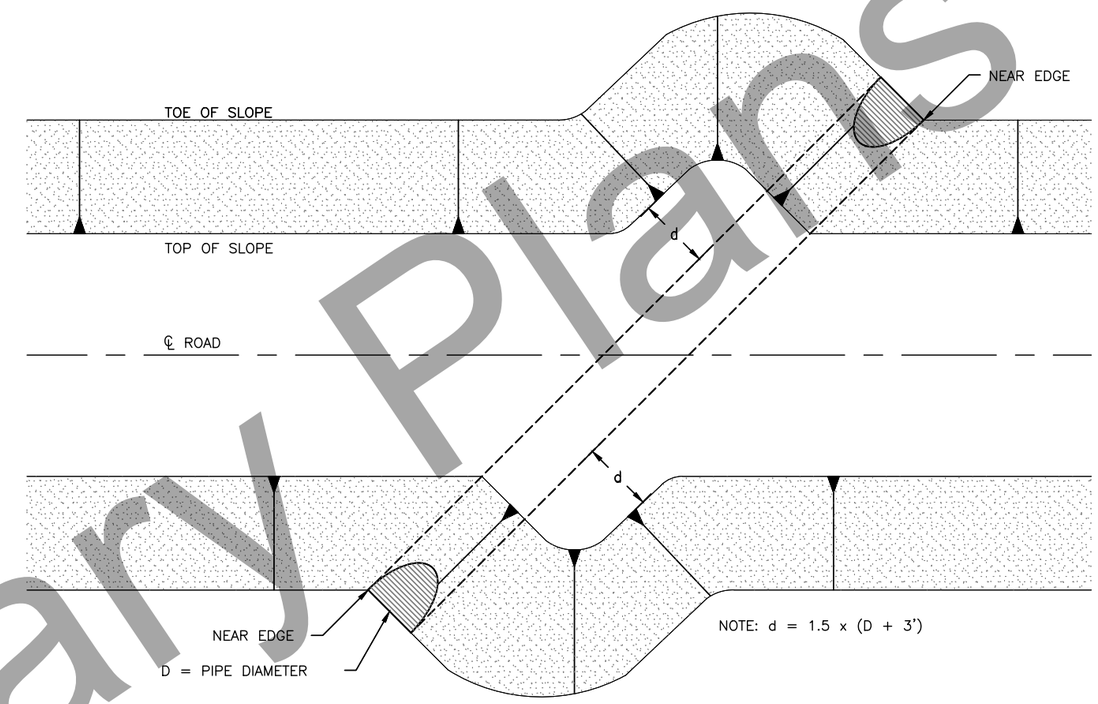

EMBANKMENT WIDENING FOR SKEWED CULVERTS PLAN

THIS DETAIL ONLY APPLIES TO 72" SPP CULVERT AT STATION 6507+97, MP 143.4.

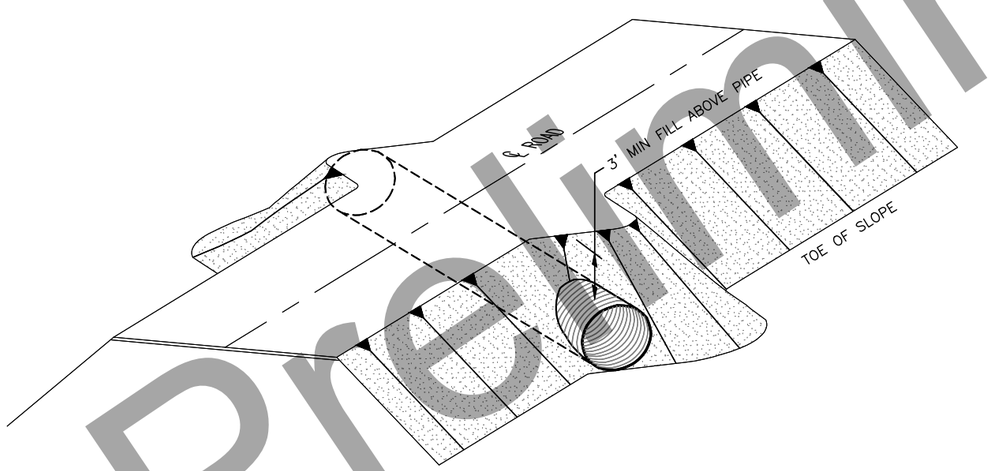

EMBANKMENT WIDENING FOR SKEWED CULVERTS OBLIQUE

NOTES:

1. CONSTRUCT CULVERT EMBANKMENT WIDENING AT CULVERT STATION 6507+97.
2. WHEN INSTALLING NEW, OR EXTENDING EXISTING, SKEWED CULVERTS, ENSURE THE FINAL LENGTH IS DETERMINED OFF THE NEAR EDGE, NOT THE CENTERLINE OF THE CULVERT.
3. TO PREVENT UNBALANCED SOIL LOADS ON THE SKEWED CULVERT, THE EMBANKMENT SHALL BE SHAPED OR WARPED, TO BALANCE LOADS AND ENSURE SIDE SUPPORT.
4. CONSTRUCT LIFTS ON EACH SIDE OF THE CULVERT CONCURRENTLY TO MINIMIZE UNBALANCED LOADING DURING INSTALLATION.
5. ALL WORK AND RESOURCES REQUIRED TO COMPLETE EMBANKMENT WIDENING FOR SKEWED CULVERTS ARE SUBSIDIARY TO 602 SERIES PAY ITEMS.

Preliminary Plans

CULVERT SKEW DETAILS

PLANS DEVELOPED BY: STATE OF ALASKA DEPARTMENT OF TRANSPORTATION & PUBLIC FACILITIES, NORTHERN REGION, 2301 PEGER ROAD, FAIRBANKS, AK 99709 (907)451-2200
C:\Users\tjbergstrom\Desktop\Home Work Homw\Home Rich\03 Drafting\Culvert Skew Details-Hwy-Gen Fri, Aug/07/20 02:11pm

NO.	DATE	REVISION

STATE	PROJECT DESIGNATION	YEAR	SHEET NO.	TOTAL SHEETS
ALASKA	PENDING/NFHWY00355	2020	E6	E10

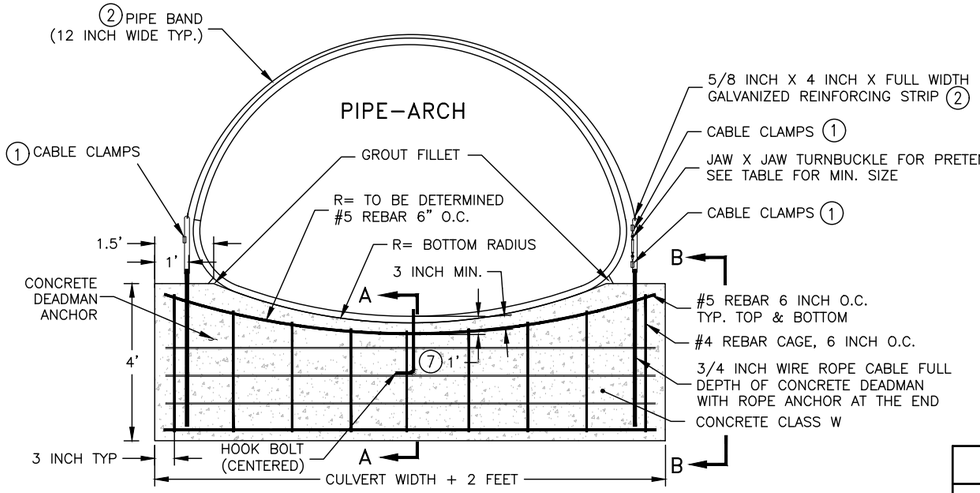

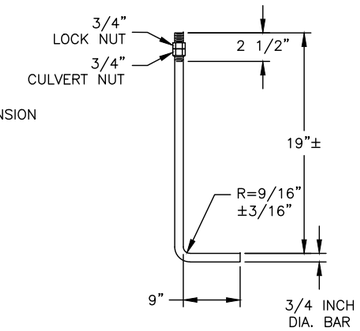

HOOK BOLT (10)

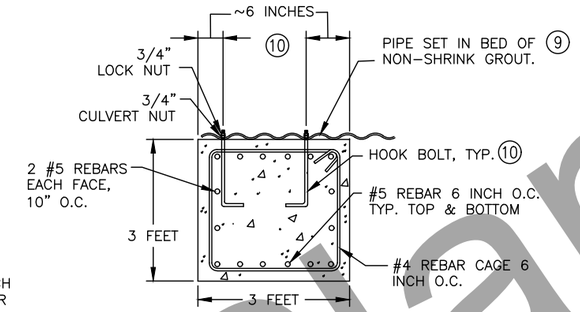

SECTION A–A

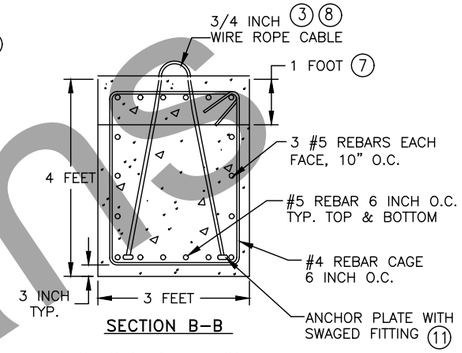

SECTION B–B

CONCRETE DEADMAN ANCHOR DETAILS

NOTE: REBAR SIZES ARE MINIMUMS.

TABLE 1: MINIMUM HARDWARE SIZE

CULVERT DIA./SPAN (FT)	WIRE ROPE DIA. (IN)	TURNBUCKLE DIA. (IN)	MINIMUM WIRE ROPE TUNRBACK/SPLICE (IN)	U-BOLT NUT TORQUE (FT-LB)
3.00 TO 3.50	1/4	5/8	4 3/4	15
3.51 TO 4.00	1/4	3/4	4 3/4	15
4.01 TO 6.00	5/16	7/8	5 1/2	30
6.01 TO 10.00	3/8	1	6 1/4	45
10.01 TO 16.00	7/16	1 1/4	7	65
16.01 TO 19.99	1/2	1 1/2	11	65

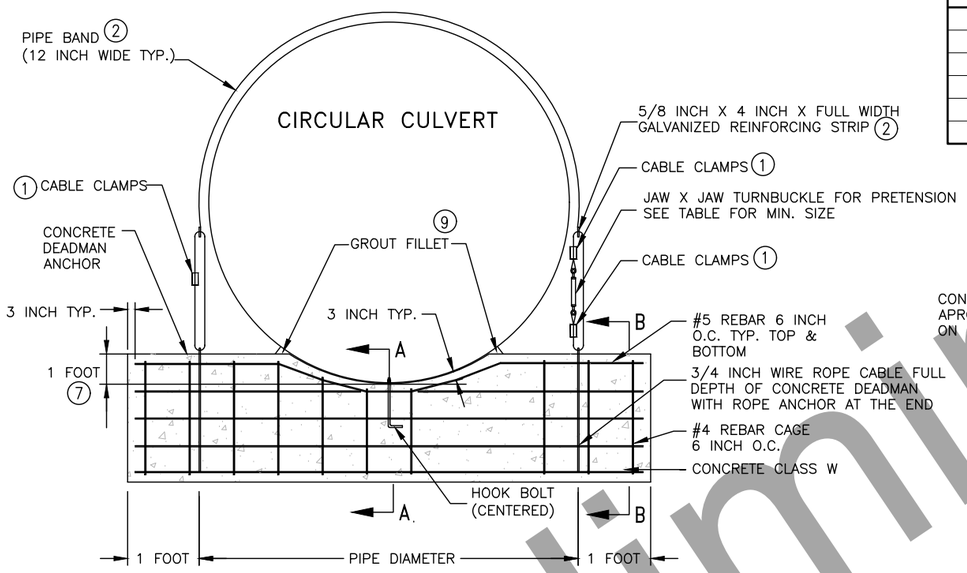

DEADMAN DETAIL

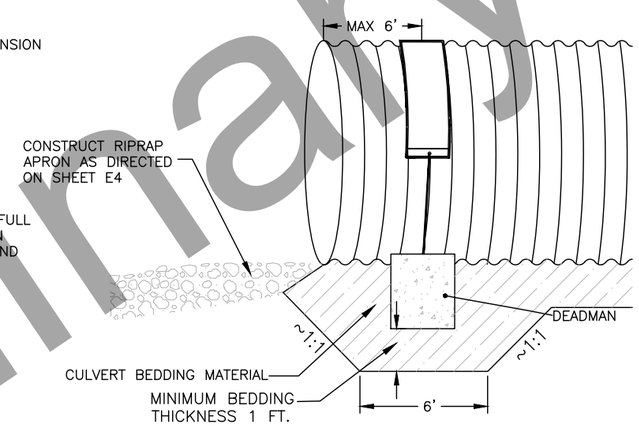

DEADMAN BEDDING DETAIL

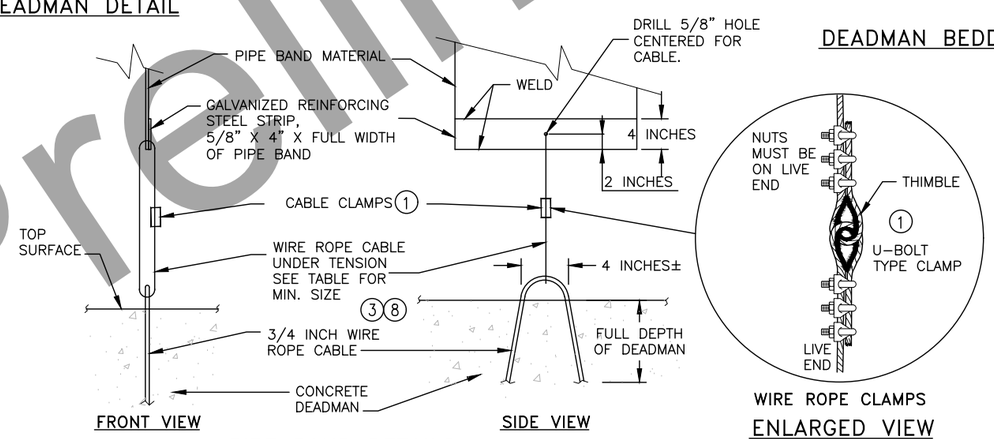

PIPE BAND DETAILS

WIRE ROPE CLAMPS
ENLARGED VIEW

NOTES:

(1) IF DROP FORGED U-BOLT TYPE CLAMPS ARE USED, THEY SHOULD BE INSTALLED USING THE FOLLOWING:

AMT. WIRE ROPE TO TURN BACK OR SPLICE: SEE TABLE.
TORQUE REQUIRED TO REACH HOLDING POWER: SEE TABLE.
SPACING: DIAMETER OF THE ROPE (INCHES) TIMES 6. THE BASE OF THE CLAMPS AND NUTS MUST BE ON THE LIVE END OF THE WIRE. INSTALL THIMBLE.

(2) THE LENGTH OF THE PIPE BANDS SHALL BE A MINIMUM OF HALF THE CIRCUMFERENCE OF THE ROUND CULVERT OR SHALL EXTEND TO WITHIN 6" OF THE SPRINGLINE ON PIPE ARCH CULVERT. THE PIPE BANDS SHALL BE A MINIMUM THICKNESS OF 1/16" GALVANIZED ASTM A1011 SS GRADE 36 OR MINIMUM THICKNESS 0.109" GALVANIZED AASHTO M218. THE REINFORCING STRIP SHALL BE GALVANIZED ASTM A36.

(3) WIRE ROPE SHALL BE 6X19 IWRC, EIPS & GALVANIZED AND MEET AASHTO M30 TYPE II REQUIREMENTS OR APPROVED EQUAL.

(4) ALL HARDWARE SHALL BE GALVANIZED TO MEET AASHTO M232

(5) CLASS W CONCRETE SHALL BE USED TO CONSTRUCT THE CONCRETE DEADMAN ANCHOR. REINFORCEMENT SHALL BE ASTM A615 GRADE 40.

(6) ALL WORK AND MATERIALS REQUIRED FOR THE CONSTRUCTION AND INSTALLATION OF THE DEADMAN SHALL NOT BE MEASURED OR PAID FOR DIRECTLY, BUT SHALL BE CONSIDERED SUBSIDIARY TO OTHER ITEMS.

(7) CONCRETE DEADMAN SHALL BE CAST TO CONFORM TO THE OUTER RADIUS OF THE CULVERT.

(8) USE A SPREADER BEAM/BAR WHEN LIFTING DEADMAN TO AVOID BENDING OF TIE-DOWN/LIFTING LOOP.

(9) THE PIPE SHALL BE SET IN A BED OF NON-SHRINK GROUT OF SUFFICIENT THICKNESS TO FULLY FILL THE CORRUGATIONS AFTER TENSIONING OF THE ANCHOR BOLTS AND TIE-DOWN BAND. THE DEADMAN SURFACE SHALL BE PROPERLY PREPARED FOR BEST BONDING WITH GROUT – CLEAN, DUST FREE, SATURATED SURFACE DRY (SSD) CONDITION. BOTTOM OF PIPE SHALL BE AS CLEAN AND DUST FREE AS PRACTICABLE. GROUT SHALL BE FILLETED/CROWNED ALONG SIDES OF PIPE AT THE DEADMAN/PIPE SEAM IN ORDER TO REDUCE WATER INFILTRATION INTO THE GROUTED AREA.

(10) PENETRATE CULVERT INVERT HOOK BOLTS IN A CORRUGATION VALLEY TO PROTECT NUT. ANCHOR BOLT HOLES SHALL BE DRILLED, NOT CUT WITH A TORCH, AND COATED WITH APPROPRIATE ZINC RICH PAINT PRIOR TO INSTALLATION. AFTER INSTALLATION AND ANCHOR BOLT NUTS HAVE BEEN TIGHTENED, COAT THE ANCHOR BOLT AND SURROUNDING AREA WITH ZINC RICH PAINT.

(11) USE CRT HARDWARE DETAILS, FROM STANDARD PLAN G-00.05 SHEET 4, FOR WIRE ROPE ANCHOR.

DEADMAN END RESTRAINT DETAILS

Preliminary Plans

PLANS DEVELOPED BY: STATE OF ALASKA DEPARTMENT OF TRANSPORTATION & PUBLIC FACILITIES, NORTHERN REGION, 2301 PEGER ROAD, FAIRBANKS, AK 99709 (907)451-2200
H:\projects\rich_hwy\60638_rich_115_148\06 design\05 civil 3d\03_90265 137-148\03 Drafting\Deadman_2020-Hwy-Gen Wed, Oct/07/20 03:48pm

NO.	DATE	REVISION

STATE	PROJECT DESIGNATION	YEAR	SHEET NO.	TOTAL SHEETS
ALASKA	PENDING/NFHWY00355	2020	E7	E10

HYDROLOGIC & HYDRAULIC SUMMARY

RICHARDSON HIGHWAY MILE 138 – STATION 6222+45 – 72" DIA. SPP X 157 FT

BASIN AREA (SQ. MI)	QFISH (CFS)	Q2 (CFS)	Q5 (CFS)	Q50 (CFS)	Q100 (CFS)
2.48	N/A	32	60	144	174

HEADWATER ELEVATION @Q50 IS 1826.5 FT, @Q100 IS 1827.2 FT

ROAD OVERTOPS AT APPROXIMATELY 393 CFS, HW/D @ 1= 168 CFS

CULVERT PURPOSE: CROSS DRAINAGE

HYDROLOGIC & HYDRAULIC SUMMARY

RICHARDSON HIGHWAY MILE 142.7 – STATION 6473+68 – 72" DIA. SPP X 160 FT

BASIN AREA (SQ. MI)	QFISH (CFS)	Q2 (CFS)	Q5 (CFS)	Q50 (CFS)	Q100 (CFS)
1.52	N/A	22	42	104	126

HEADWATER ELEVATION @Q50 IS 1912.6 FT, @Q100 IS 1913.2 FT

ROAD OVERTOPS AT APPROXIMATELY 518 CFS, HW/D @ 1= 190 CFS

CULVERT PURPOSE: CROSS DRAINAGE

HYDROLOGIC & HYDRAULIC SUMMARY

RICHARDSON HIGHWAY MILE 143.4 – STATION 6507+97 – 72" DIA. SPP X 154 FT

BASIN AREA (SQ. MI)	QFISH (CFS)	Q2 (CFS)	Q5 (CFS)	Q50 (CFS)	Q100 (CFS)
1.75	N/A	25	48	116	141

HEADWATER ELEVATION @Q50 IS 1947.5 FT, @Q100 IS 1948.1 FT

ROAD OVERTOPS AT APPROXIMATELY 371 CFS, HW/D @ 1= 180 CFS

CULVERT PURPOSE: CROSS DRAINAGE

HYDROLOGIC & HYDRAULIC SUMMARY

RICHARDSON HIGHWAY MILE 145.1 – STATION 6596+66 – 48" DIA. CSP X 180 FT

BASIN AREA (SQ. MI)	QFISH (CFS)	Q2 (CFS)	Q5 (CFS)	Q50 (CFS)	Q100 (CFS)
0.65	N/A	11	22	56	68

HEADWATER ELEVATION @Q50 IS 1962.6 FT, @Q100 IS 1963.2 FT

ROAD OVERTOPS AT APPROXIMATELY 192 CFS, HW/D @ 1= 65 CFS

CULVERT PURPOSE: CROSS DRAINAGE

1. NO H&H SUMMARY REQUIRED FOR 48" CSP CULVERTS AT STATION 6316+82 AND 6321+39. THESE PIPES ARE OVERSIZED FOR ICING.

HYDROLOGIC & HYDRAULIC SUMMARY

RICHARDSON HIGHWAY MILE 145.6 – STATION 6624+38 – 60" DIA. SPP X 138 FT

BASIN AREA (SQ. MI)	QFISH (CFS)	Q2 (CFS)	Q5 (CFS)	Q50 (CFS)	Q100 (CFS)
1.75	N/A	25	48	116	141

HEADWATER ELEVATION @Q50 IS 1958.8 FT, @Q100 IS 1959.7 FT

ROAD OVERTOPS AT APPROXIMATELY 256 CFS, HW/D @ 1= 116 CFS

CULVERT PURPOSE: CROSS DRAINAGE

HYDROLOGIC & HYDRAULIC SUMMARY

RICHARDSON HIGHWAY MILE 145.7 – STATION 6628+73 – 60" DIA. SPP X 96 FT

BASIN AREA (SQ. MI)	QFISH (CFS)	Q2 (CFS)	Q5 (CFS)	Q50 (CFS)	Q100 (CFS)
0.9	N/A	15	28	71	87

HEADWATER ELEVATION @Q50 IS 1962.1 FT, @Q100 IS 1962.6 FT

ROAD OVERTOPS AT APPROXIMATELY 196 CFS, HW/D @ 1= 100 CFS

CULVERT PURPOSE: CROSS DRAINAGE

HYDROLOGIC & HYDRAULIC SUMMARY

RICHARDSON HIGHWAY MILE 145.8 – STATION 6633+00 – 48" DIA. CSP X 85 FT

BASIN AREA (SQ. MI)	QFISH (CFS)	Q2 (CFS)	Q5 (CFS)	Q50 (CFS)	Q100 (CFS)
0.9	N/A	15	28	71	87

HEADWATER ELEVATION @Q50 IS 1968.8 FT, @Q100 IS 1969.6 FT

ROAD OVERTOPS AT APPROXIMATELY 94 CFS, HW/D @ 1= 65 CFS

CULVERT PURPOSE: CROSS DRAINAGE

HYDROLOGIC & HYDRAULIC SUMMARY

RICHARDSON HIGHWAY MILE 148.3 – STATION 6767+17 – 60" DIA. SPP X 153 FT

BASIN AREA (SQ. MI)	QFISH (CFS)	Q2 (CFS)	Q5 (CFS)	Q50 (CFS)	Q100 (CFS)
0.34	1.3	6	13	34	42

HEADWATER ELEVATION @Q50 IS 1943.4 FT, @Q100 IS 1943.7 FT

ROAD OVERTOPS AT APPROXIMATELY 348 CFS, HW/D @ 1= 105 CFS

CULVERT PURPOSE: ENHANCED HYDRAULIC DESIGN FOR FISH PASSAGE / CROSS DRAINAGE

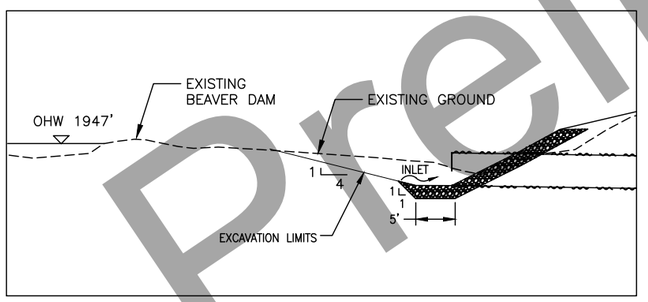

6767+17 CULVERT INLET
SPECIAL CHANNEL SECTION:
SEE SHEET F20

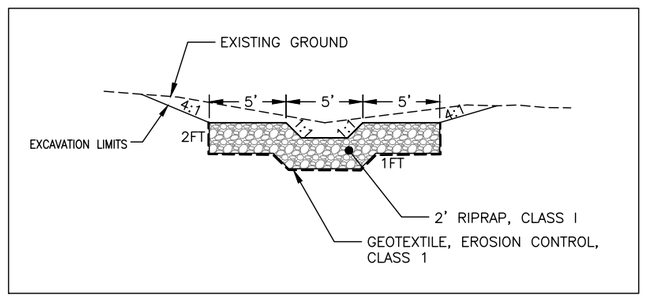

6767+17 CULVERT INLET APRON
SPECIAL CHANNEL CROSS SECTION:
SEE SHEET F20

HYDROLOGIC & HYDRAULIC SUMMARY

Preliminary Plans

PLANS DEVELOPED BY: STATE OF ALASKA DEPARTMENT OF TRANSPORTATION & PUBLIC FACILITIES, NORTHERN REGION, 2301 PEGER ROAD, FAIRBANKS, AK 99709 (907)451-2200
H:\projects\rich_hwy\60638_rich_115_148\06 design\05 civil 3d\03_90265 137-148\03 Drafting\90265_E7-HYDROLOGIC & HYDRAULIC SUMMARY Thu, Oct/08/20 09:27am

NO.	DATE	REVISION

STATE	PROJECT DESIGNATION	YEAR	SHEET NO.	TOTAL SHEETS
ALASKA	PENDING/NFHWY00355	2020	E8	E10

THAW PIPE NOTES:

1. INSTALL 1/2 INCH THAW PIPE ALONG THE BOTTOM OF THE CULVERT. THAW PIPES SHALL LAY FREELY WITH NO PIPE HANGERS OR ATTACHMENTS. SEE CULVERT SUMMARY FOR THAW PIPE LOCATIONS.
2. ALL THAW PIPES SHALL RUN THE ENTIRE LENGTH OF THE CULVERT AND HAVE NO JOINTS OR COUPLINGS WITHIN 30" OF INSIDE OF CULVERT ENDS.
3. FIELD BEND ALL CORNERS, WITHOUT KINKS 180' AROUND CULVERT ENDS FROM INSIDE TO OUTSIDE OF THE CULVERT WITH NO GREATER THAN 1' RADIUS. FITTINGS MAY BEGIN ON OUTSIDE OF THE CULVERT AFTER COMING BACK AT LEAST 6" PAST CULVERT ENDS.
4. THAW PIPES SHALL BE WATER TIGHT AND ABLE TO HOLD ANTIFREEZE. USE THREAD SEALANT ON FITTINGS AND CAP THAW PIPE ENDS.
5. NEATLY RUN THAW PIPES ALONG CULVERT OR EMBANKMENT TO TERMINATION BY SECURELY MOUNTING 5' ABOVE THE GROUND ON PRESSURE TREATED SUPPORT POSTS OF HEM-FIR, NO. 2 OR BETTER. USE AMMONIACAL COPPER ZINC ARSENATE (ACZA) OR CHROMATED COPPER ARSENATE (CCA) PRESERVATIVES ON SUPPORT POSTS. PRESSURE TREAT IN ACCORDANCE WITH AASHTO M133.
6. FASTEN THAW PIPE TO SUPPORT POSTS WITH GALVANIZED RIGID CONDUIT STRAPS AND 2" LONG GALVANIZED LAG SCREWS AT MAX. 12" CENTERS.
7. SUPPORT POSTS SHALL BE LOCATED AS DIRECTED BY THE ENGINEER AT MINIMUM 18' FROM THE EDGE OF PAVEMENT.
8. INSTALL STAND PIPE ON INLET AND OUTLET END.
9. CHARGE/FILL THE THAW PIPE WITH NON-TOXIC BIODEGRADABLE ANTIFREEZE RATED TO -60 DEGREES FAHRENHEIT. THIS IS SUBSIDIARY TO 616.0002.0050 PAY ITEM.

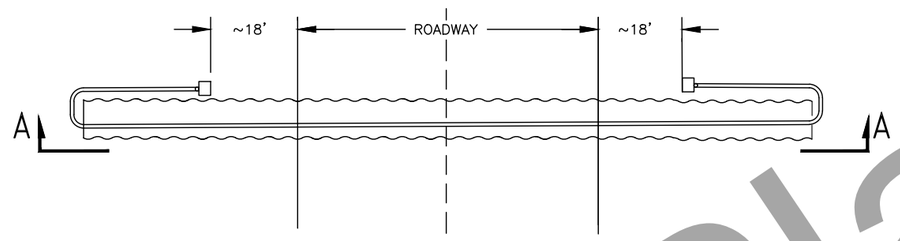

PLAN

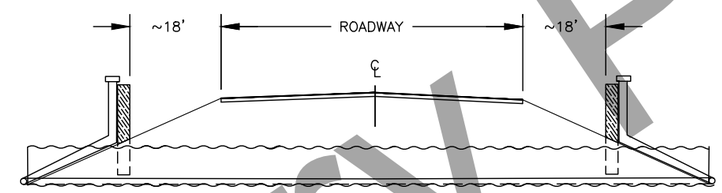

SECTION A-A

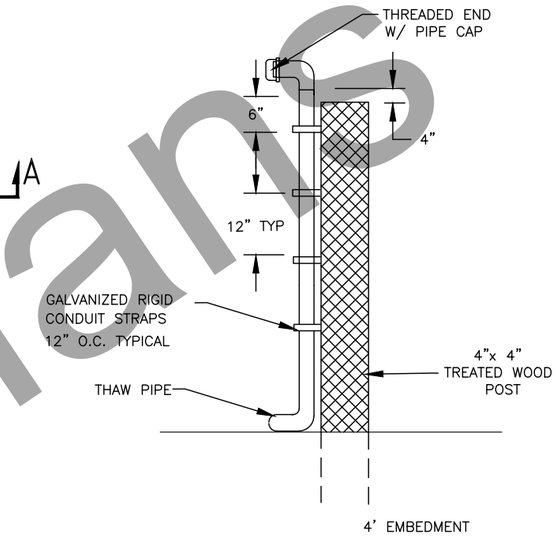

STAND PIPE

Preliminary Plans

CULVERT THAWPIPE DETAILS

PLANS DEVELOPED BY: STATE OF ALASKA DEPARTMENT OF TRANSPORTATION & PUBLIC FACILITIES, NORTHERN REGION, 2301 PEGER ROAD, FAIRBANKS, AK 99709 (907)451-2200
H:\projects\rich_hwy\60638_rich_115_148\06 design\05 civil 3d\03_90265 137-148\03 Drafting\90265_Culverts-CULVERT THAWPIPE DETAILS Mon, Oct/12/20 02:12pm

NO.	DATE	REVISION

STATE	PROJECT DESIGNATION	YEAR	SHEET NO.	TOTAL SHEETS
ALASKA	PENDING/NFHWY00355	2020	E9	E10

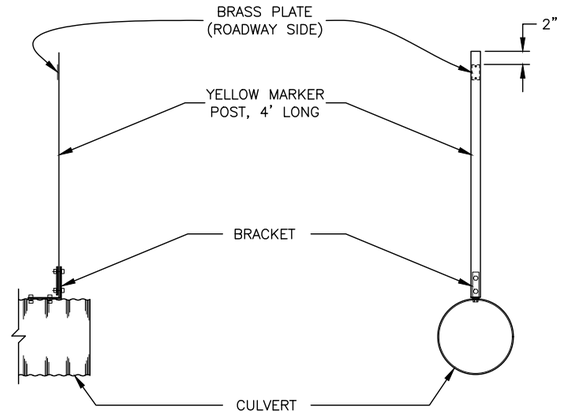

SIDE VIEW END VIEW

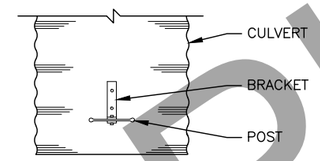

TOP VIEW

CULVERT MARKER POST DETAIL

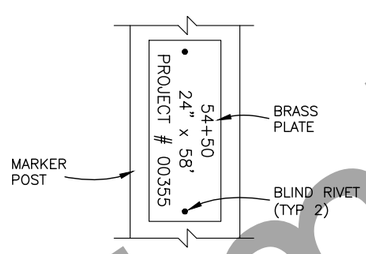

STATION AND SIZE OF PIPE, AND PROJECT NUMBER TO BE STAMPED USING LETTERS A MINIMUM OF 1/4" HIGH INTO A 2" x 6" x .064" THICK BRASS PLATE. FASTEN PLATE TO THE SIDE FACING THE ROADWAY WITH TWO 1/8" DIA. BLIND RIVETS.

BRASS PLATE DETAIL

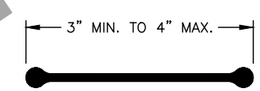

POST DETAIL

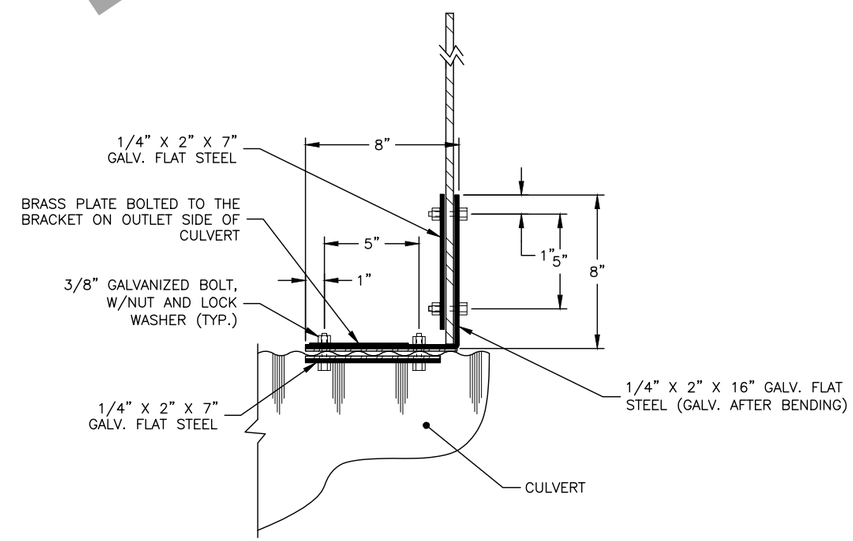

BRACKET DETAIL

CULVERT MARKER POST DETAILS

CULVERT MARKER NOTES:

1. DRILL ALL BOLT HOLES. COAT HOLES IN PIPE WITH ZINC RICH PAINT. FLAME CUTTING SHALL NOT BE PERMITTED.
2. MARKER POST ENDS SHALL BE SQUARE.
3. GASKET MATERIAL SHALL BE PLACED BETWEEN DISSIMILAR METALS. GASKET MATERIAL SHALL BE APPROVED PRIOR TO INSTALLATION.
4. WHEN MORE THAN TWO PIPES ARE LOCATED TOGETHER. ONLY THE FIRST AND LAST PIPE SHALL HAVE A MARKER.

CULVERT MARKER POST DETAILS

Preliminary Plans

PLANS DEVELOPED BY: STATE OF ALASKA DEPARTMENT OF TRANSPORTATION & PUBLIC FACILITIES, NORTHERN REGION, 2301 PEGER ROAD, FAIRBANKS, AK 99709 (907)451-2200
C:\Users\jbergstrom\Desktop\Home Work Hornw\Home Rich\03 Drafting\90265_Culverts-CULVERT MARKER POST DETAILS Fri, Aug/07/20 02:15pm

NO.	DATE	REVISION

STATE	PROJECT DESIGNATION	YEAR	SHEET NO.	TOTAL SHEETS
ALASKA	PENDING/NFHWY00355	2020	E10	E10

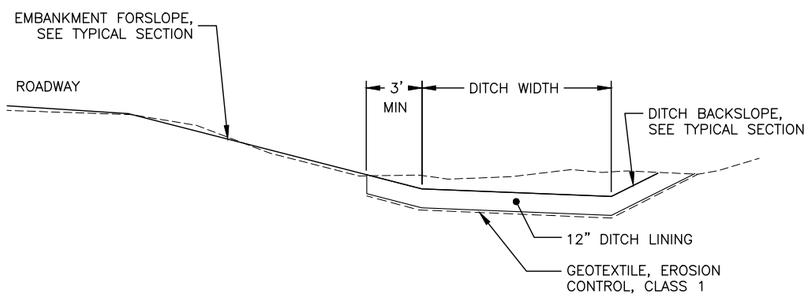

DITCH LINING DETAIL

RT DITCH SHOWN; MIRROR FOR LT DITCH

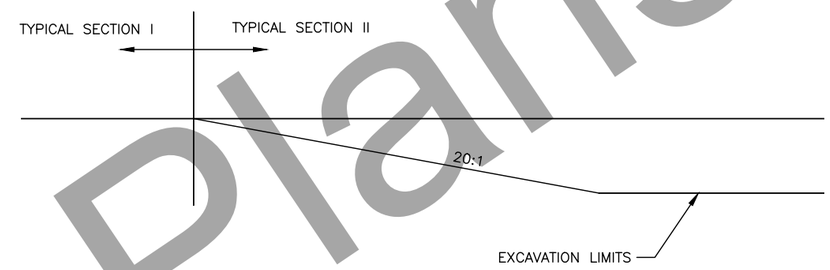

TYPICAL SECTION TRANSITION

DITCH LINING NOTES:

1. EXTEND LINING ALONG TOE TO CULVERT ENDS.

DITCH LINING SUMMARY

STATION TO STATION	LT/RT	DITCH WIDTH (FT)	ESTIMATED WIDTH DITCH LINING (FT)	ESTIMATED VOLUME (CY)
"0"6527+60 "0"6528+00	LT	10	17	32
"0"6704+00 "0"6717+00	LT	10	30	1,444
"0"6704+00 "0"6720+00	RT	10	35	2074
			TOTAL	3,550

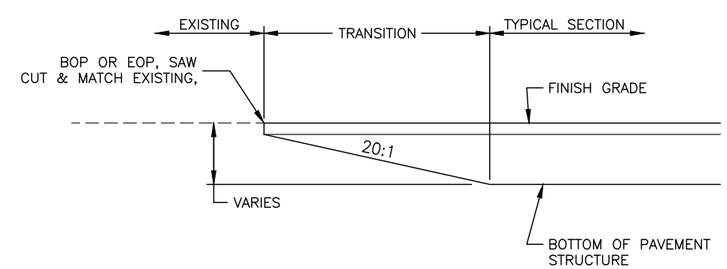

TYPICAL TRANSITION TO EXISTING PAVEMENT DETAIL

Preliminary Plans

MISCELLANEOUS DETAILS

PLANS DEVELOPED BY: STATE OF ALASKA DEPARTMENT OF TRANSPORTATION & PUBLIC FACILITIES, NORTHERN REGION, 2301 PEGER ROAD, FAIRBANKS, AK 99709 (907)451-2200
C:\Users\Ubergstrom\Desktop\Home Work Homw\Home Rich\03 Drafting\MSCL-Details-MISCELLANEOUS DETAILS Fri, Aug/07/20 02:19pm

NO.	DATE	REVISION

STATE	PROJECT DESIGNATION	YEAR	SHEET NO.	TOTAL SHEETS
ALASKA	PENDING/NFHWY00355	2020	F1	F21

PLAN VIEW KEY

- (P) STATION / DIAMETER X LENGTH — *INSTALL CULVERT PIPE*
- (R) STATION / DIAMETER X LENGTH — *REMOVE PIPE*
- (A) STATION / TYPE, WIDTH — *CONSTRUCT APPROACH*
- (T) STATION / TYPE, WIDTH — *CONSTRUCT TURNOUT*
- (#) STATION / SIGN CODE(S) — *SIGN LOCATION #*

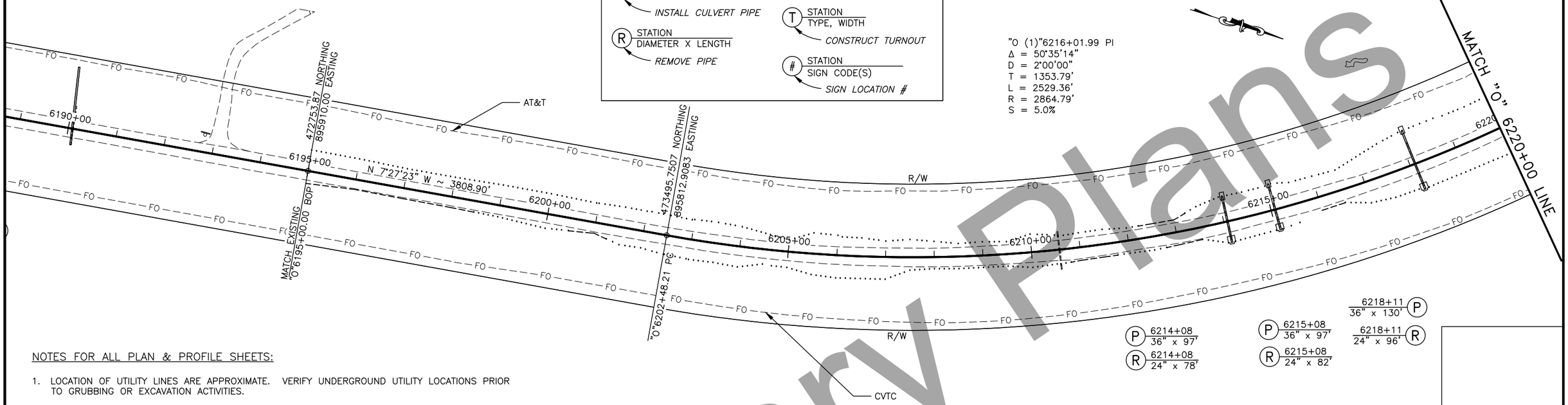

NOTES FOR ALL PLAN & PROFILE SHEETS:

1. LOCATION OF UTILITY LINES ARE APPROXIMATE. VERIFY UNDERGROUND UTILITY LOCATIONS PRIOR TO GRUBBING OR EXCAVATION ACTIVITIES.

2. RIGHT-OF-WAY LINES ARE APPROXIMATE. SEE THE RICHARDSON HIGHWAY MILE 129 TO 148 RIGHT-OF-WAY MAP, CHITINA RECORDING DISTRICT FILE #910593, DATED AUGUST 27, 1991.

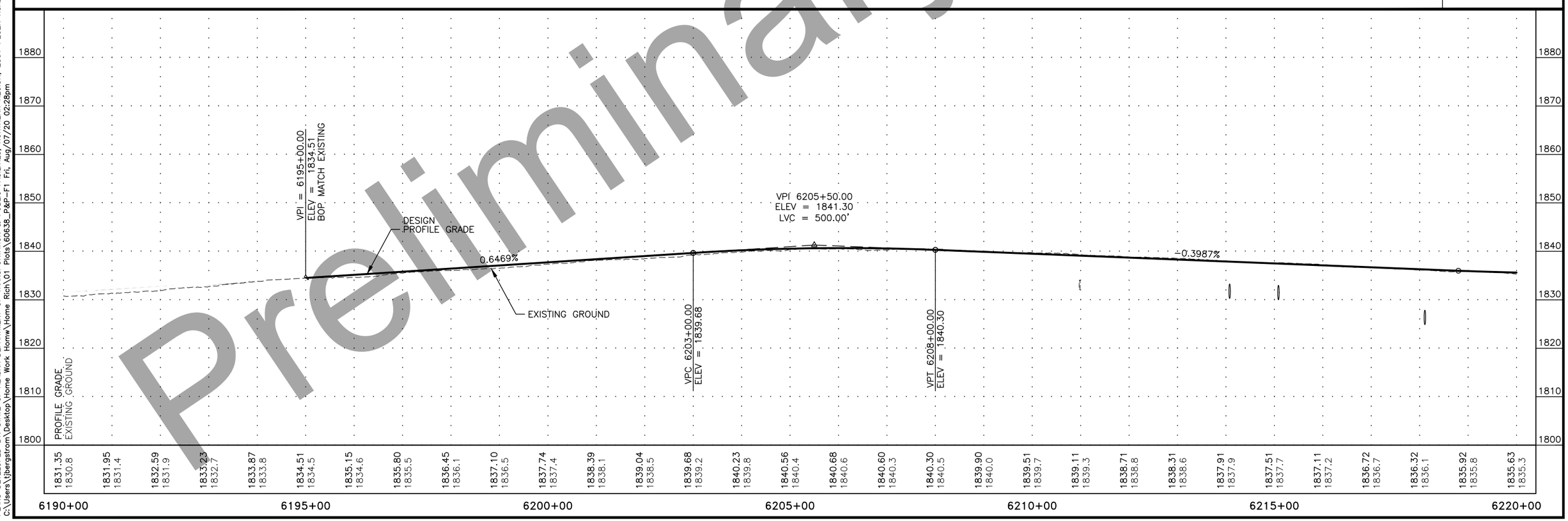

Preliminary Plans

PLANS DEVELOPED BY: STATE OF ALASKA DEPARTMENT OF TRANSPORTATION & PUBLIC FACILITIES, NORTHERN REGION, 2301 PEGER ROAD, FAIRBANKS, AK 99709 (907)451-2200
C:\Users\jbergstrom\Desktop\Home Work Homw\Home Rich\01 Plots\60638_P&P-F1 Fri, Aug/07/20 02:28pm

NO.	DATE	REVISION

STATE	PROJECT DESIGNATION	YEAR	SHEET NO.	TOTAL SHEETS
ALASKA	PENDING/NFHWY00355	2020	F2	F21

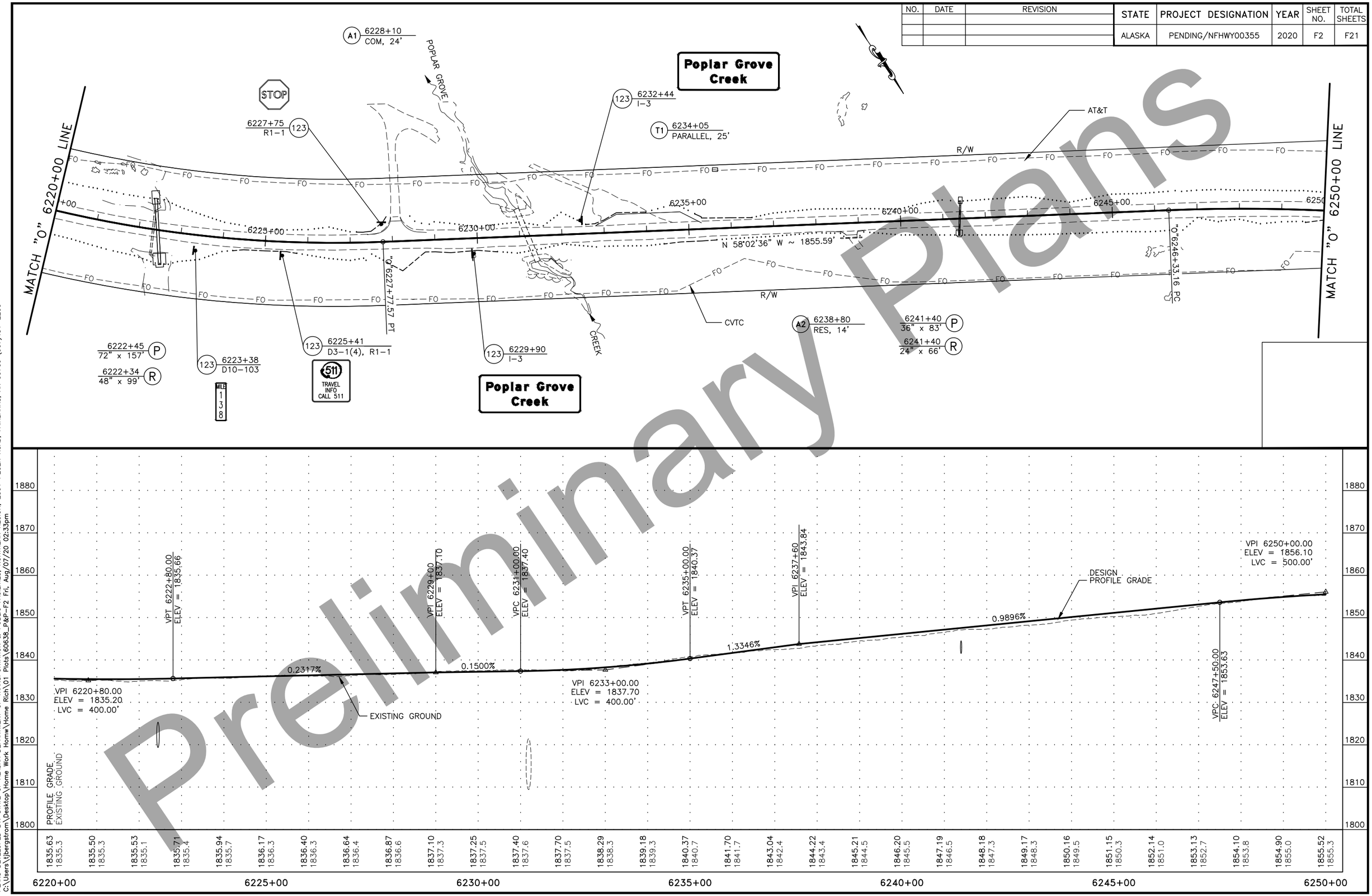

Preliminary Plans

PLANS DEVELOPED BY: STATE OF ALASKA DEPARTMENT OF TRANSPORTATION & PUBLIC FACILITIES, NORTHERN REGION, 2301 PEGER ROAD, FAIRBANKS, AK 99709 (907)451-2200
C:\Users\jbergstrom\Desktop\Home Work Home\Home Rich\01 Plots\60638_P&P-F2 Fri, Aug/07/20 02:35pm

NO.	DATE	REVISION

STATE	PROJECT DESIGNATION	YEAR	SHEET NO.	TOTAL SHEETS
ALASKA	PENDING/NFHWY00355	2020	F3	F21

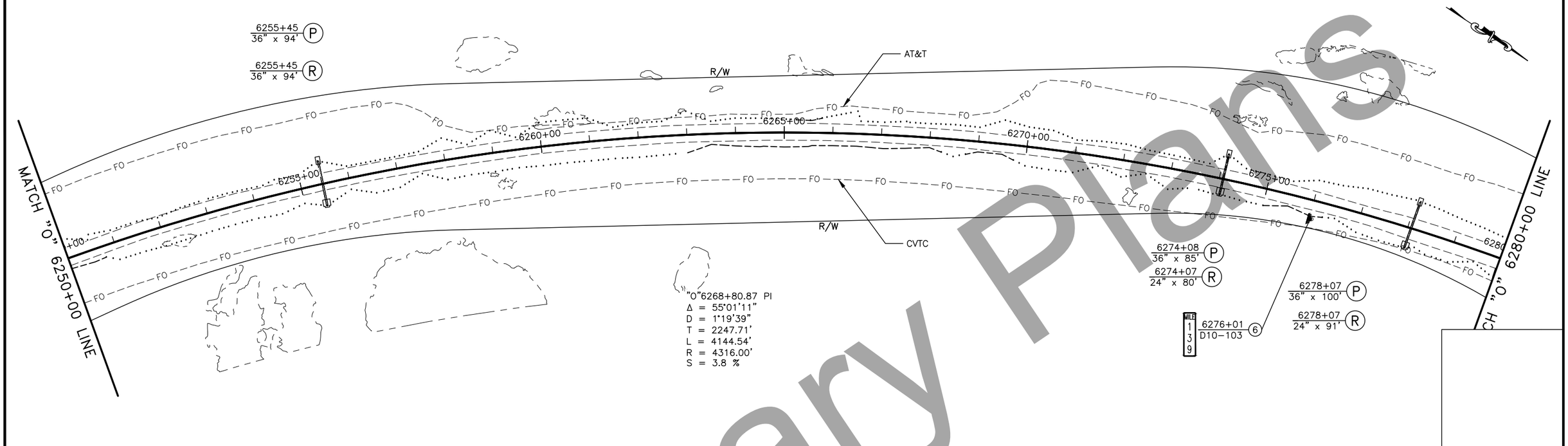

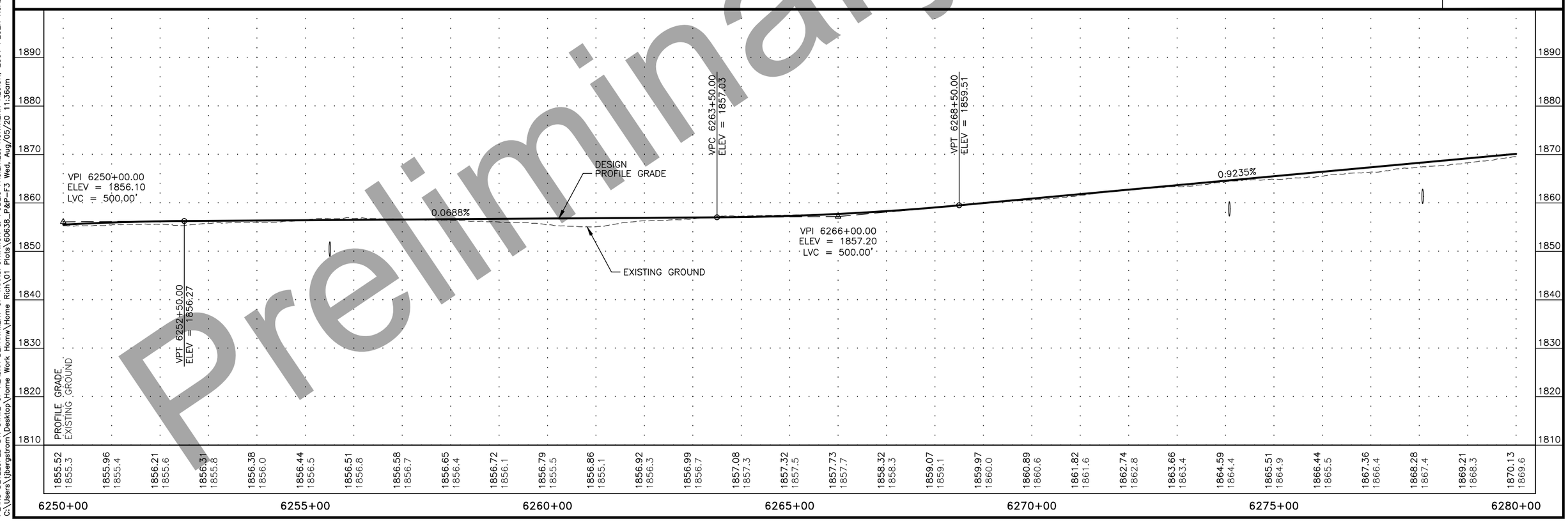

Preliminary Plans

PLANS DEVELOPED BY: STATE OF ALASKA DEPARTMENT OF TRANSPORTATION & PUBLIC FACILITIES, NORTHERN REGION, 2301 PEGER ROAD, FAIRBANKS, AK 99709 (907)451-2200
C:\Users\jbergstrom\Desktop\Home Work Homw\Home Rich\01 Plots\60638_P&P-F3 Wed, Aug/05/20 11:36am

NO.	DATE	REVISION

STATE	PROJECT DESIGNATION	YEAR	SHEET NO.	TOTAL SHEETS
ALASKA	PENDING/NFHWY00355	2020	F4	F21

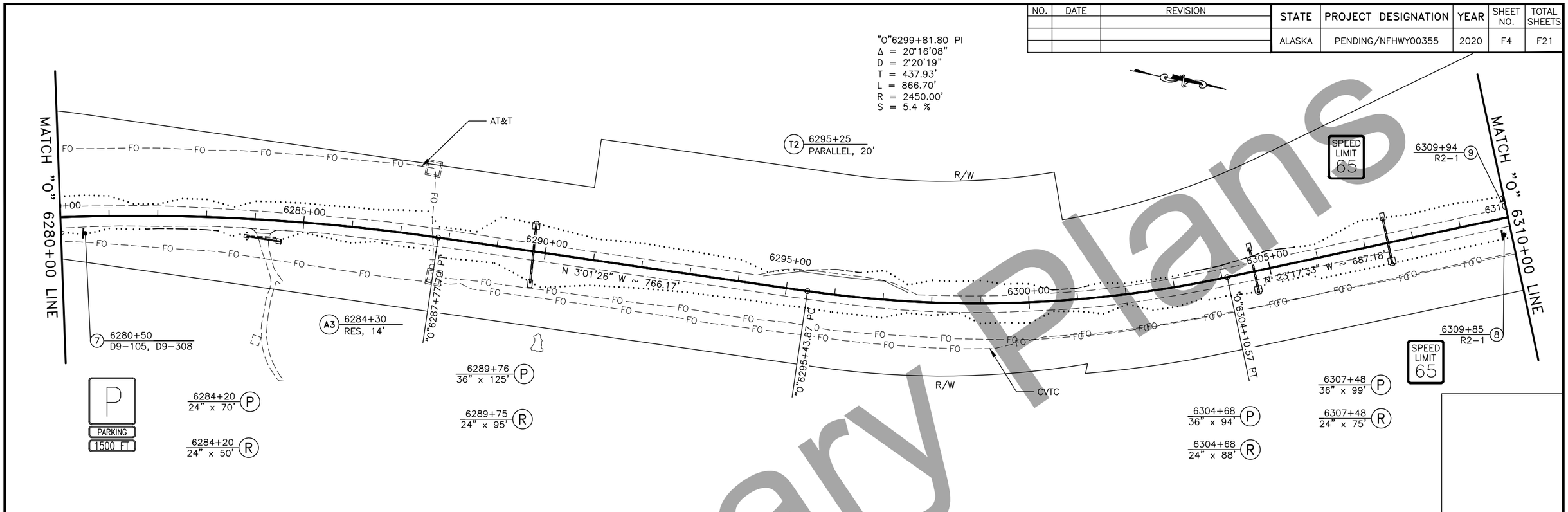

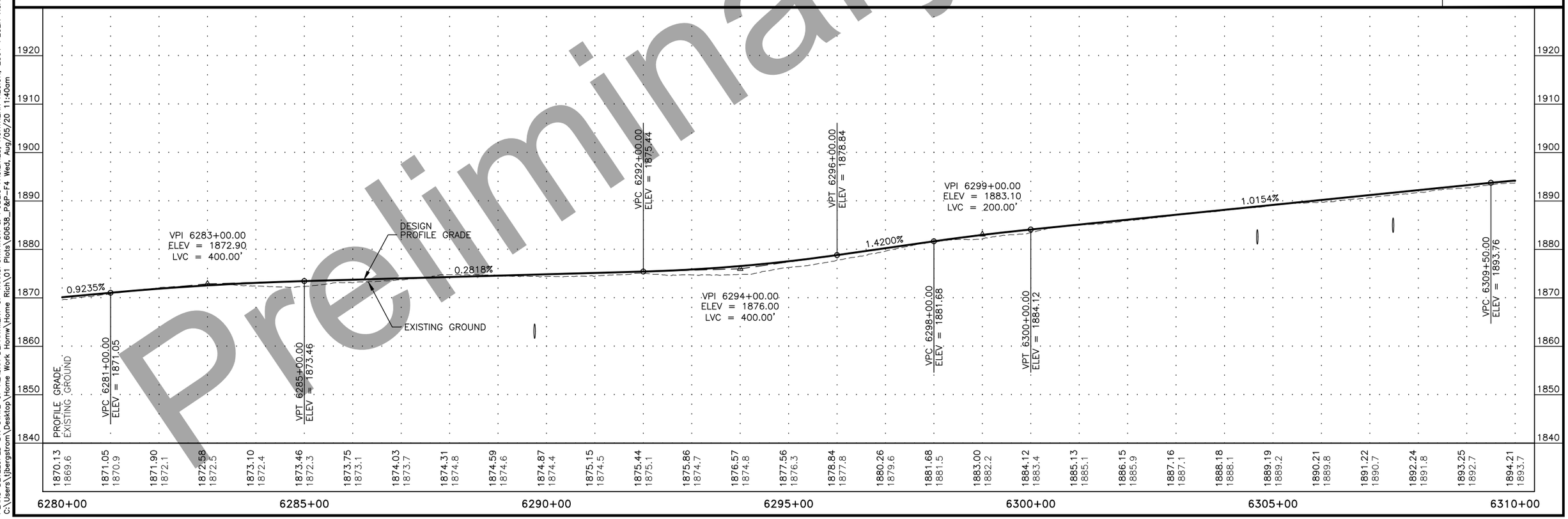

Preliminary Plans

PLANS DEVELOPED BY: STATE OF ALASKA DEPARTMENT OF TRANSPORTATION & PUBLIC FACILITIES, NORTHERN REGION, 2301 PEGER ROAD, FAIRBANKS, AK 99709 (907)451-2200
C:\Users\jbergstrom\Desktop\Home Work Homw\Home Rich\01 Plots\60638_P&P-F4 Wed, Aug/05/20 11:40am

NO.	DATE	REVISION

STATE	PROJECT DESIGNATION	YEAR	SHEET NO.	TOTAL SHEETS
ALASKA	PENDING/NFHWY00355	2020	F5	F21

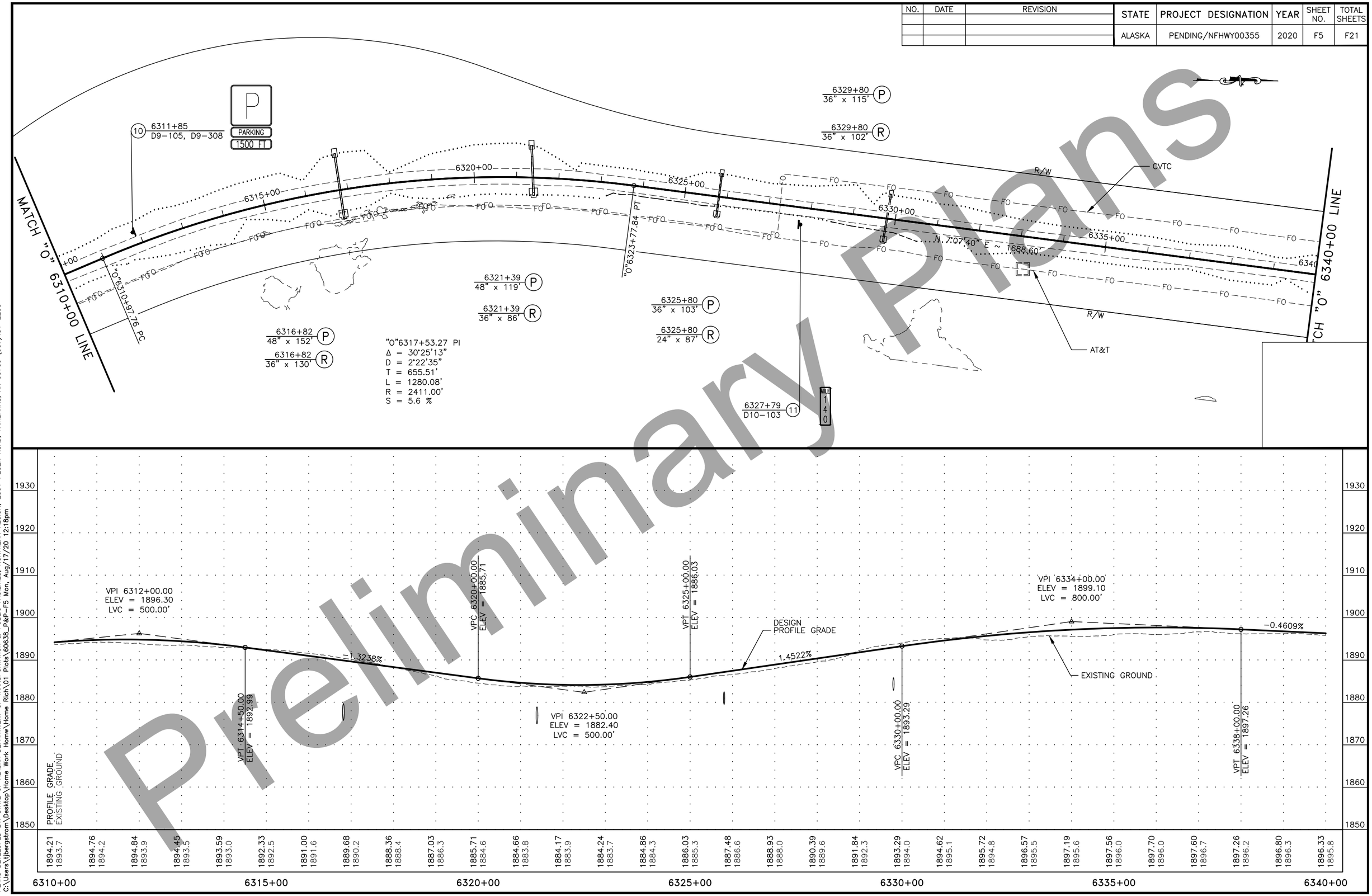

Preliminary Plans

PLANS DEVELOPED BY: STATE OF ALASKA DEPARTMENT OF TRANSPORTATION & PUBLIC FACILITIES, NORTHERN REGION, 2301 PEGER ROAD, FAIRBANKS, AK 99709 (907)451-2200
C:\Users\jbergstrom\Desktop\Home Work Home\Home Rich\01 Plots\60638_P&P-F5 Mon, Aug/17/20 12:18pm

NO.	DATE	REVISION

STATE	PROJECT DESIGNATION	YEAR	SHEET NO.	TOTAL SHEETS
ALASKA	PENDING/NFHWY00355	2020	F6	F21

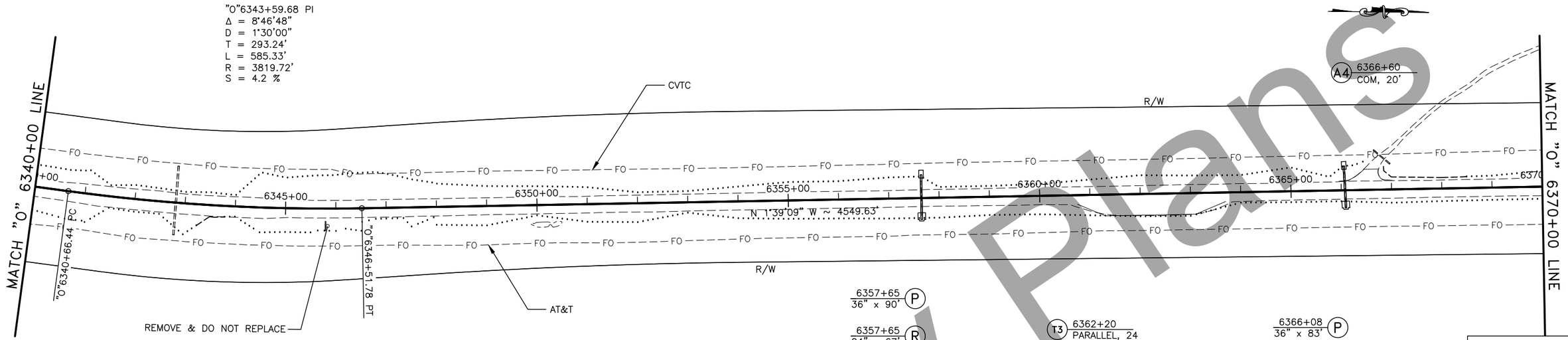

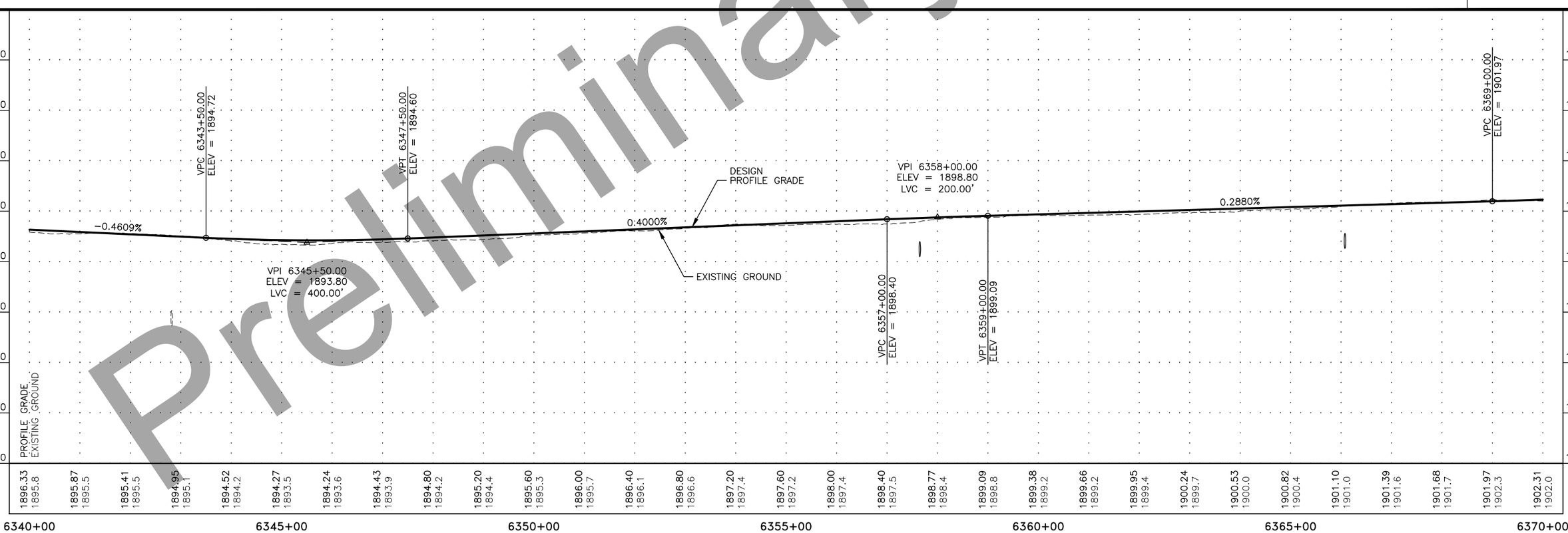

Preliminary Plans

PLANS DEVELOPED BY: STATE OF ALASKA DEPARTMENT OF TRANSPORTATION & PUBLIC FACILITIES, NORTHERN REGION, 2301 PEGER ROAD, FAIRBANKS, AK 99709 (907)451-2200
C:\Users\jbergstrom\Desktop\Home Work Homw\Home Rich\01 Plots\60638_P&P-F6 Mon, Aug/17/20 12:23pm

NO.	DATE	REVISION

STATE	PROJECT DESIGNATION	YEAR	SHEET NO.	TOTAL SHEETS
ALASKA	PENDING/NFHWY00355	2020	F7	F21

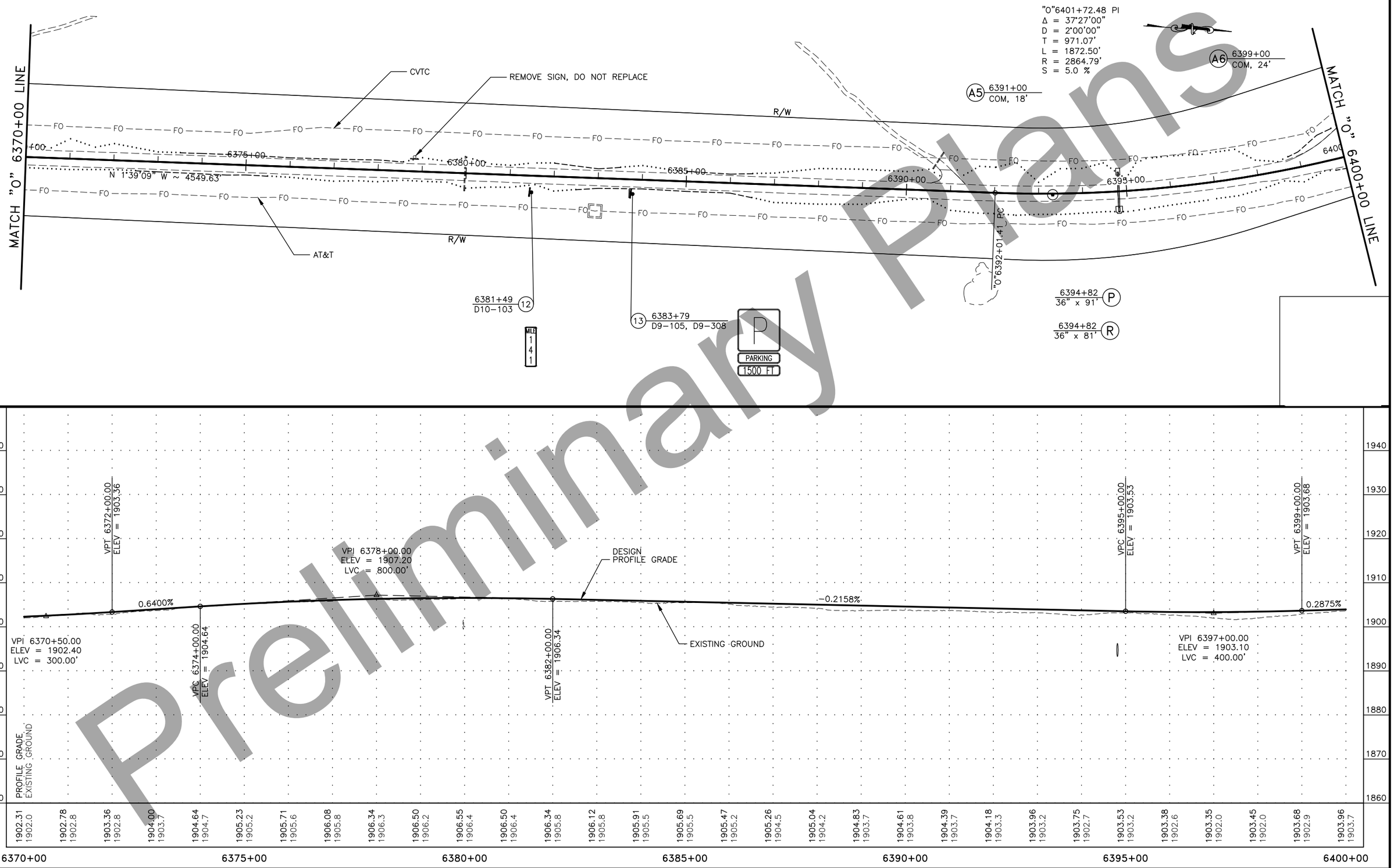

Preliminary Plans

PLANS DEVELOPED BY: STATE OF ALASKA DEPARTMENT OF TRANSPORTATION & PUBLIC FACILITIES, NORTHERN REGION, 2301 PEGER ROAD, FAIRBANKS, AK 99709 (907)451-2200
C:\Users\jbergstrom\Desktop\Home Work Home\Home Rich\01 Plots\60638_P&P-F7 Thu, Oct/08/20 02:14pm

NO.	DATE	REVISION

STATE	PROJECT DESIGNATION	YEAR	SHEET NO.	TOTAL SHEETS
ALASKA	PENDING/NFHWY00355	2020	F8	F21

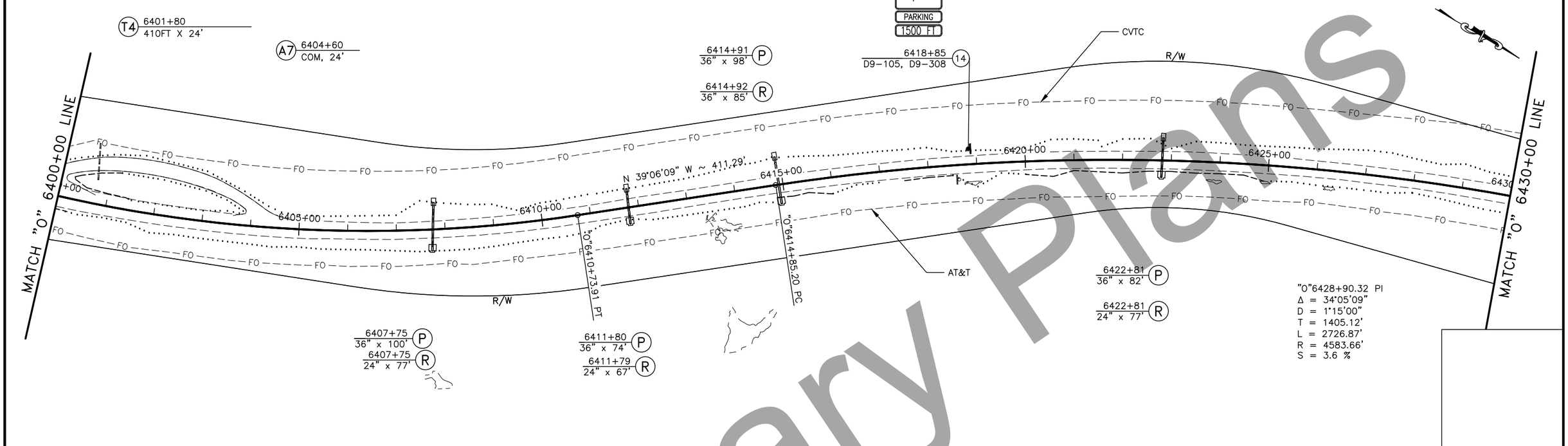

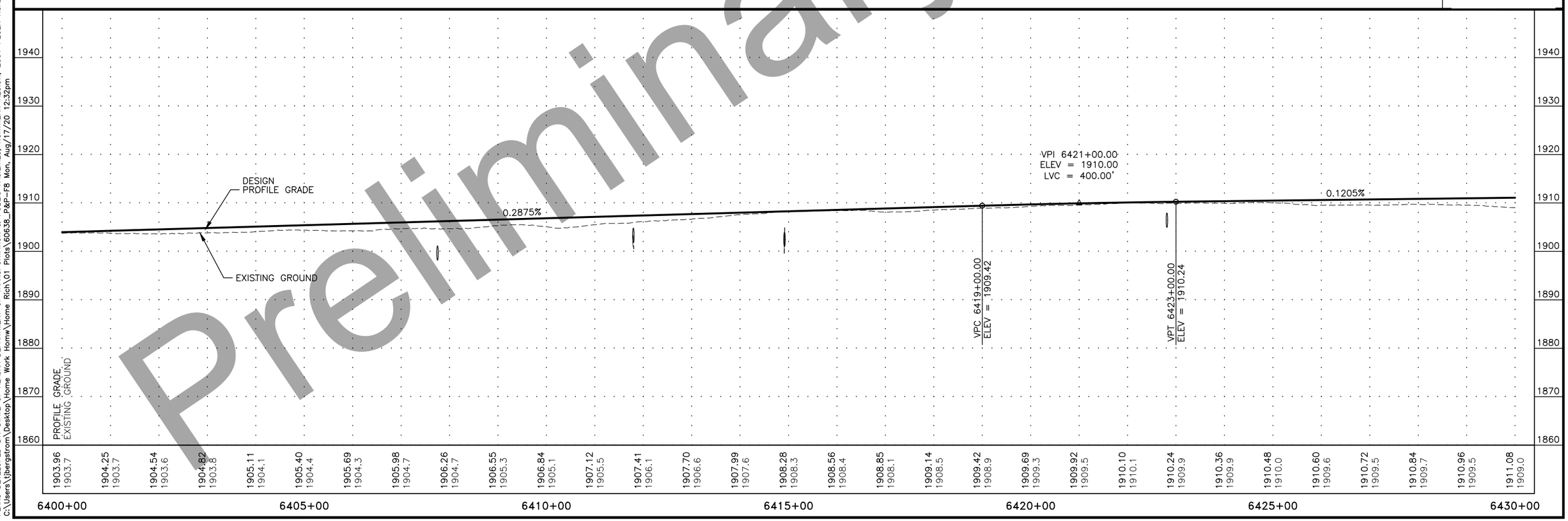

Preliminary Plans

PLANS DEVELOPED BY: STATE OF ALASKA DEPARTMENT OF TRANSPORTATION & PUBLIC FACILITIES, NORTHERN REGION, 2301 PEGER ROAD, FAIRBANKS, AK 99709 (907)451-2200
C:\Users\jbergstrom\Desktop\Home Work Homw\Home Rich\01 Plots\60638_P&P-F8 Mon, Aug/17/20 12:32pm

NO.	DATE	REVISION

STATE	PROJECT DESIGNATION	YEAR	SHEET NO.	TOTAL SHEETS
ALASKA	PENDING/NFHWY00355	2020	F9	F21

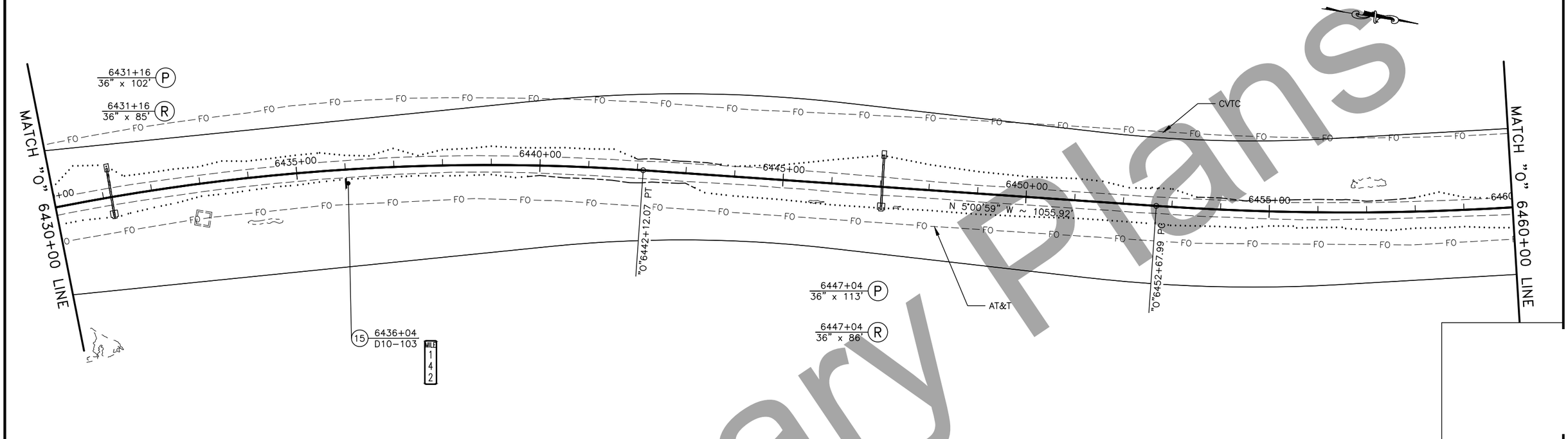

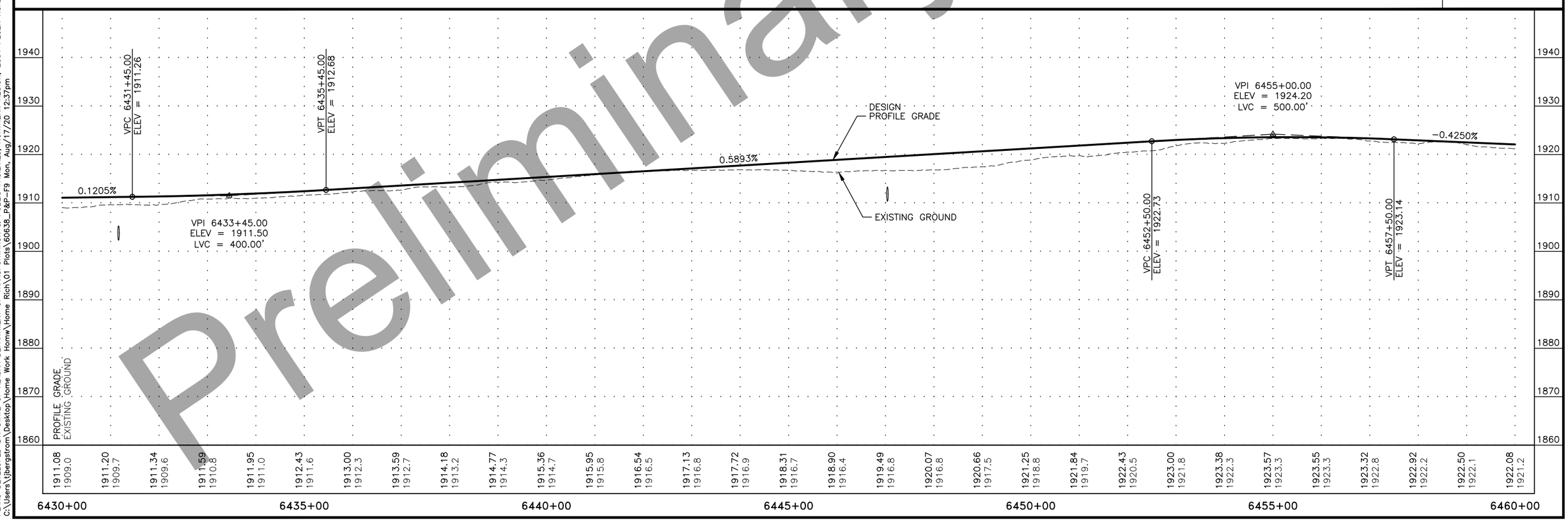

Preliminary Plans

PLANS DEVELOPED BY: STATE OF ALASKA DEPARTMENT OF TRANSPORTATION & PUBLIC FACILITIES, NORTHERN REGION, 2301 PEGER ROAD, FAIRBANKS, AK 99709 (907)451-2200
C:\Users\jbergstrom\Desktop\Home Work Homw\Home Rich\01 Plots\60638_P&P-F9 Mon, Aug/17/20 12:37pm

NO.	DATE	REVISION

STATE	PROJECT DESIGNATION	YEAR	SHEET NO.	TOTAL SHEETS
ALASKA	PENDING/NFHWY00355	2020	F10	F21

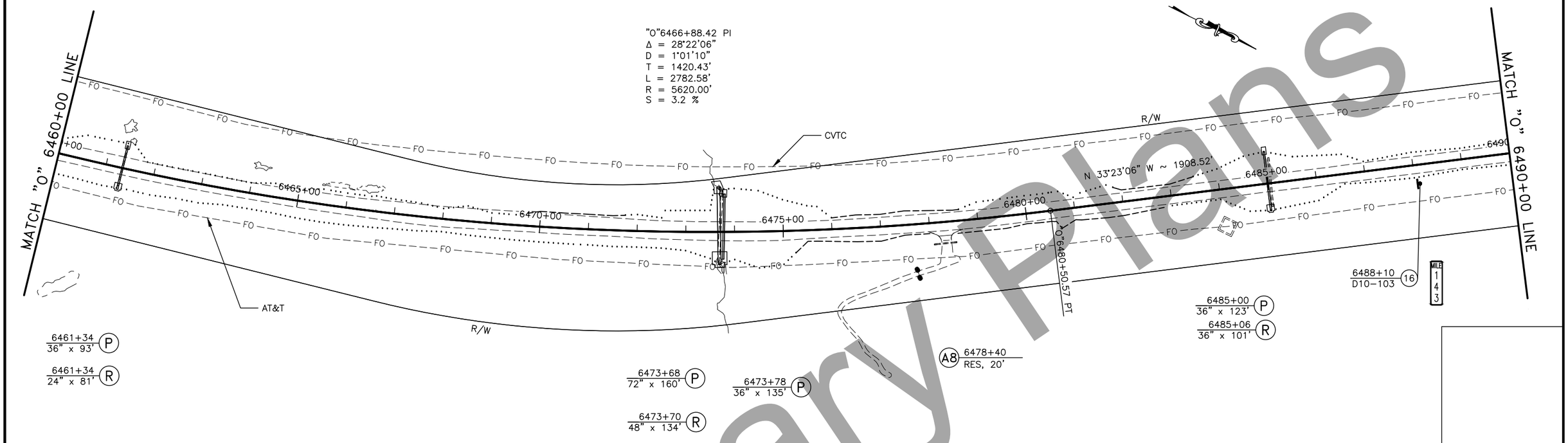

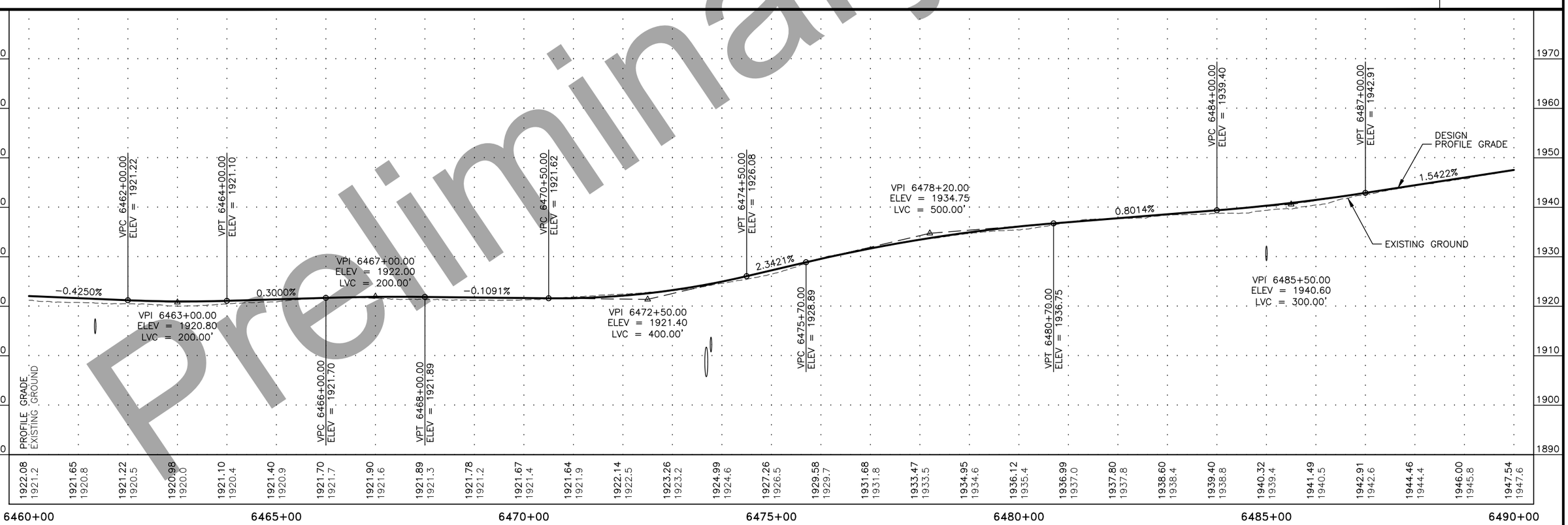

Preliminary Plans

PLANS DEVELOPED BY: STATE OF ALASKA DEPARTMENT OF TRANSPORTATION & PUBLIC FACILITIES, NORTHERN REGION, 2301 PEGER ROAD, FAIRBANKS, AK 99709 (907)451-2200
C:\Users\jbergstrom\Desktop\Home Work Homw\Home Rich\01 Plots\60638_P&P-F10 Mon, Aug/17/20 12:42pm

NO.	DATE	REVISION

STATE	PROJECT DESIGNATION	YEAR	SHEET NO.	TOTAL SHEETS
ALASKA	PENDING/NFHWY00355	2020	F11	F21

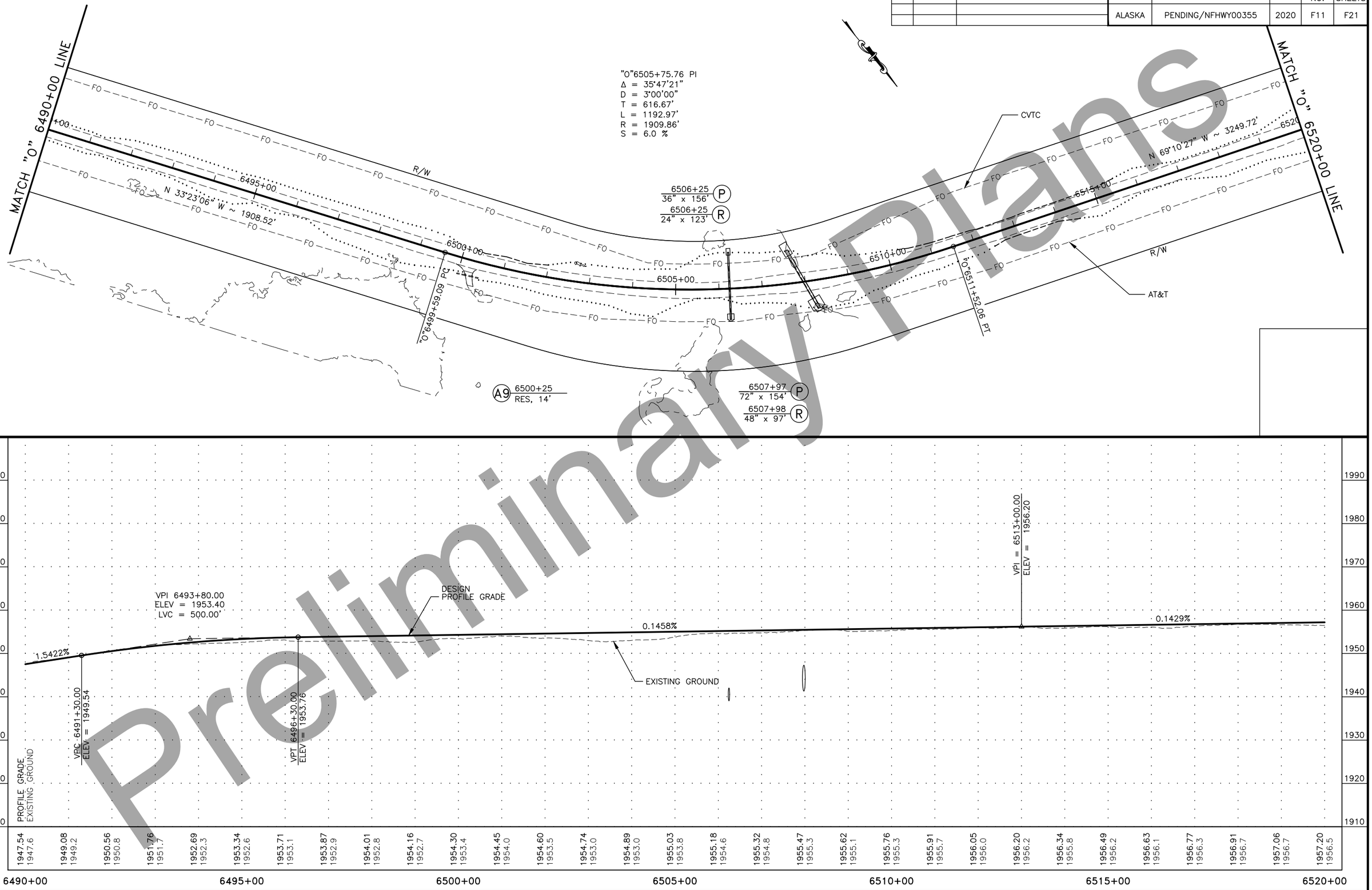

Preliminary Plans

PLANS DEVELOPED BY: STATE OF ALASKA DEPARTMENT OF TRANSPORTATION & PUBLIC FACILITIES, NORTHERN REGION, 2301 PEGER ROAD, FAIRBANKS, AK 99709 (907)451-2200
C:\Users\jbergstrom\Desktop\Home Work Home\Home Rich\01 Plots\60638_P&P-F11 Mon, Aug/17/20 12:47pm

NO.	DATE	REVISION

STATE	PROJECT DESIGNATION	YEAR	SHEET NO.	TOTAL SHEETS
ALASKA	PENDING/NFHWY00355	2020	F12	F21

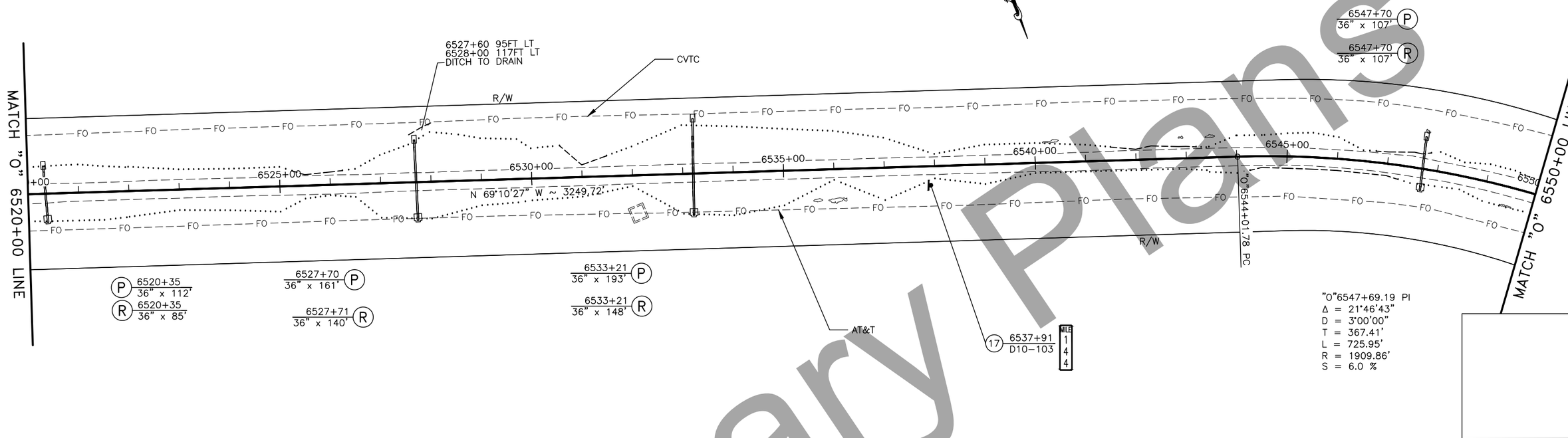

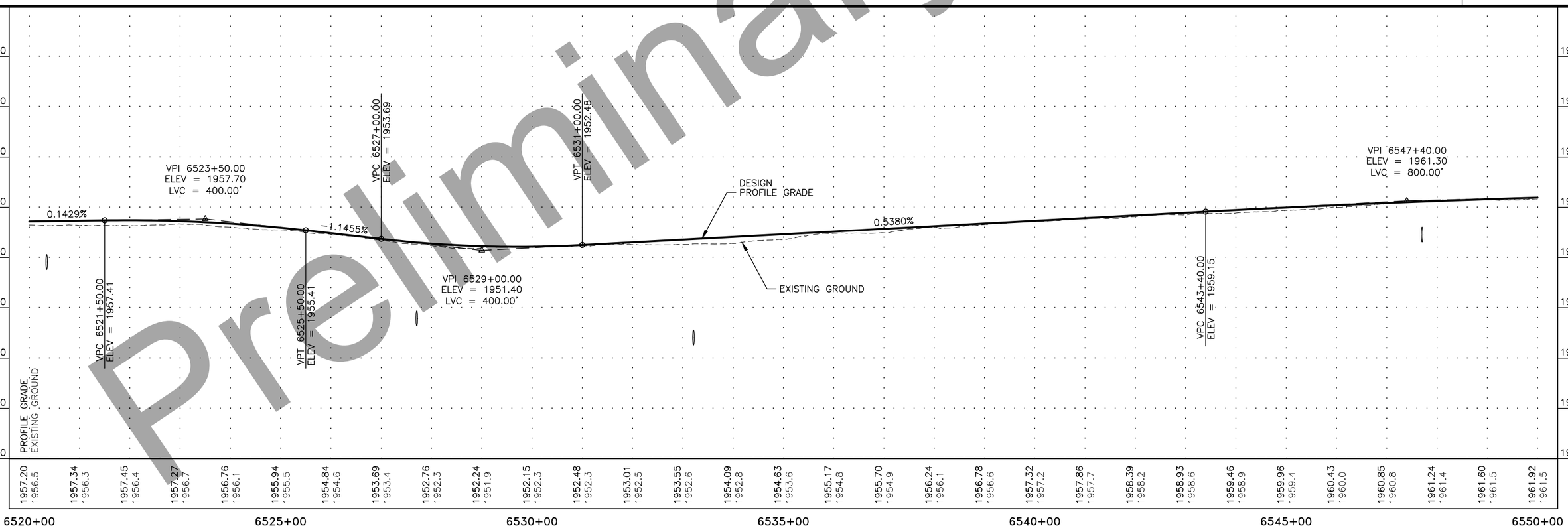

Preliminary Plans

PLANS DEVELOPED BY: STATE OF ALASKA DEPARTMENT OF TRANSPORTATION & PUBLIC FACILITIES, NORTHERN REGION, 2301 PEGER ROAD, FAIRBANKS, AK 99709 (907)451-2200
C:\Users\jbergstrom\Desktop\Home Work Homw\Home Rich\01 Plots\60638_P&P-F12 Mon, Aug/17/20 12:51 pm

NO.	DATE	REVISION

STATE	PROJECT DESIGNATION	YEAR	SHEET NO.	TOTAL SHEETS
ALASKA	PENDING/NFHWY00355	2020	F13	F21

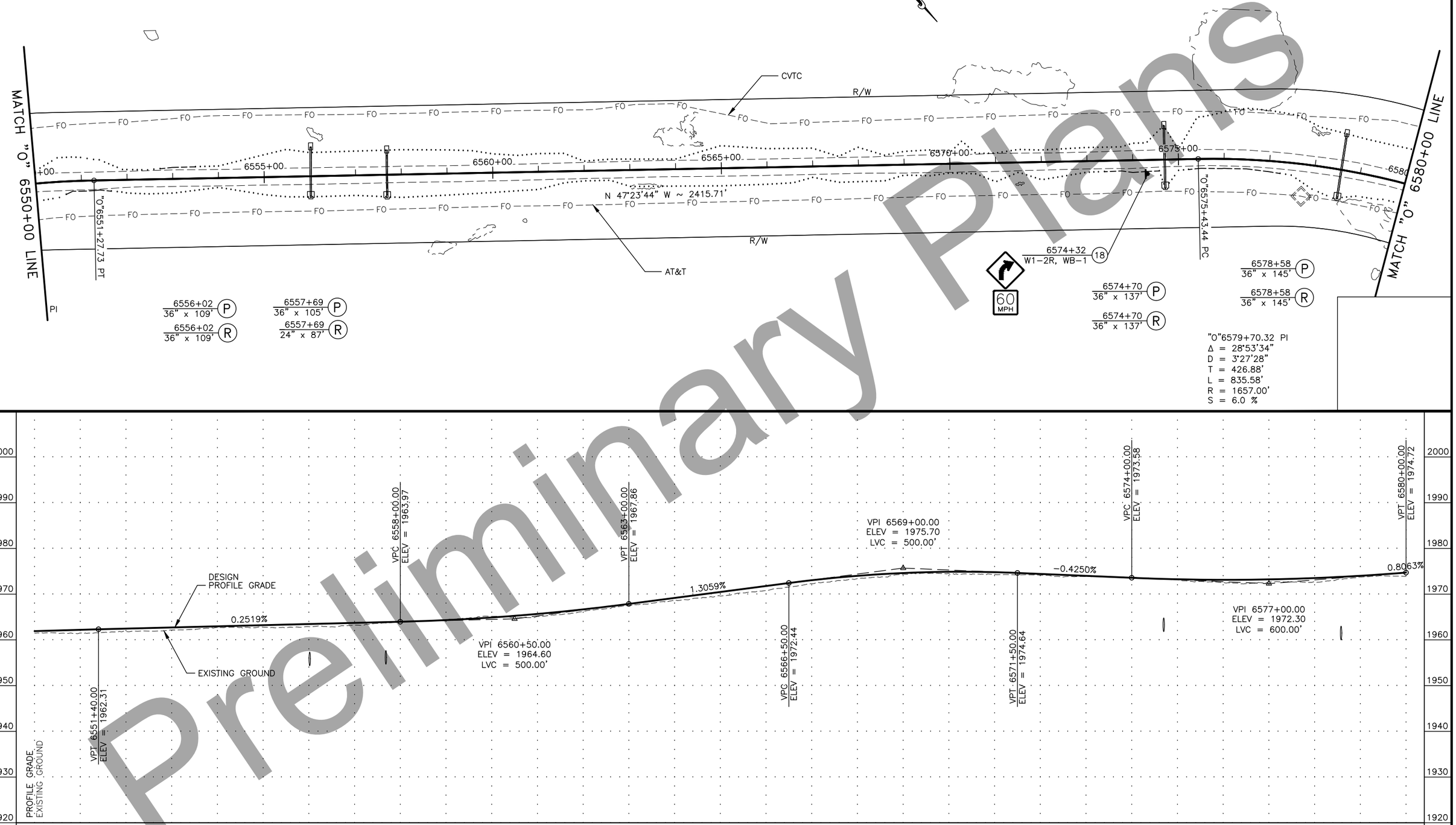

Preliminary Plans

PLANS DEVELOPED BY: STATE OF ALASKA DEPARTMENT OF TRANSPORTATION & PUBLIC FACILITIES, NORTHERN REGION, 2301 PEGER ROAD, FAIRBANKS, AK 99709 (907)451-2200
C:\Users\jbergstrom\Desktop\Home Work Home\Home Rich\01 Plots\60638_P&P-F13 Mon, Aug/17/20 12:56pm

NO.	DATE	REVISION

STATE	PROJECT DESIGNATION	YEAR	SHEET NO.	TOTAL SHEETS
ALASKA	PENDING/NFHWY00355	2020	F14	F21

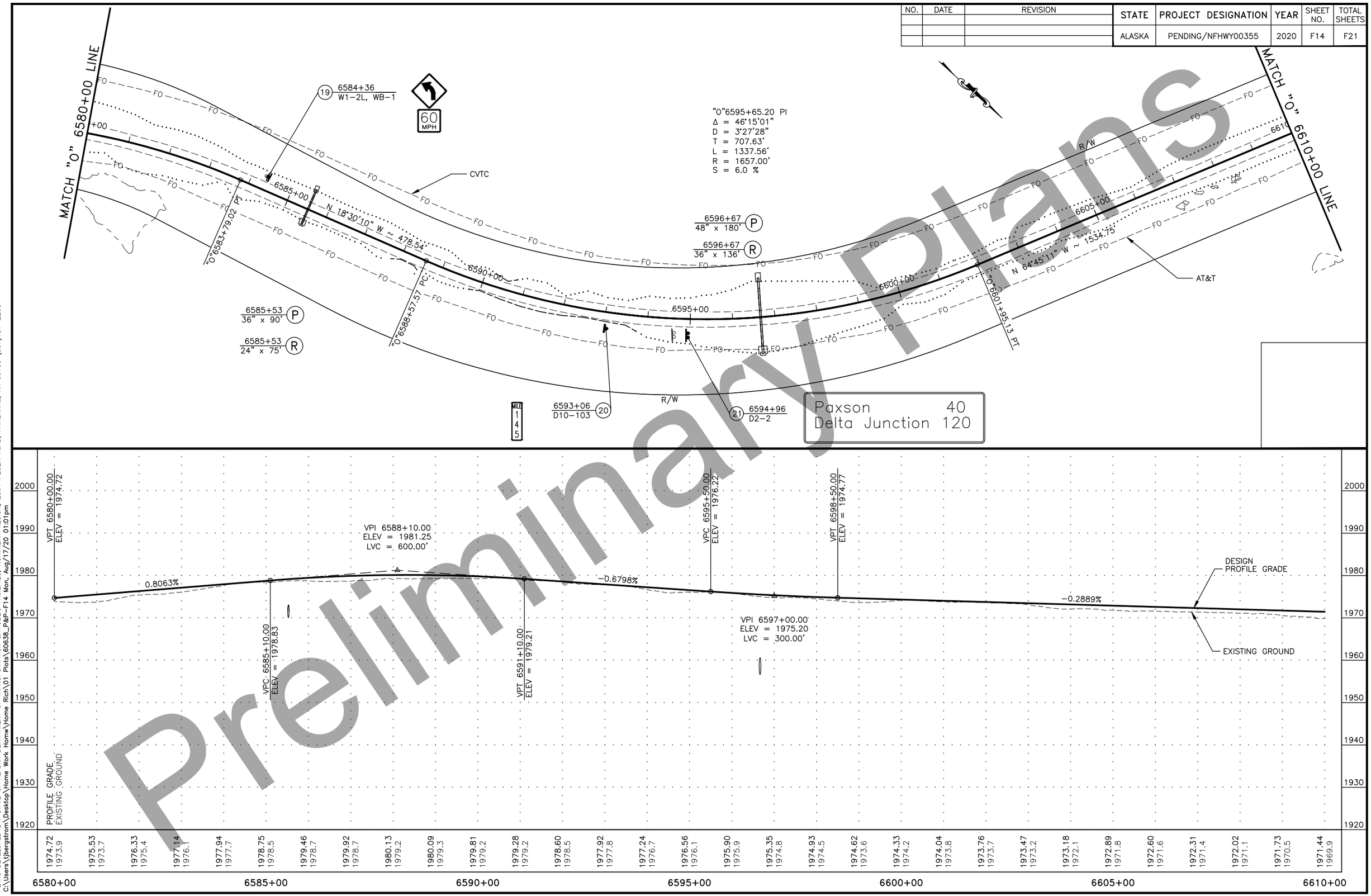

Preliminary Plans

PLANS DEVELOPED BY: STATE OF ALASKA DEPARTMENT OF TRANSPORTATION & PUBLIC FACILITIES, NORTHERN REGION, 2301 PEGER ROAD, FAIRBANKS, AK 99709 (907)451-2200
C:\Users\jbergstrom\Desktop\Home Work Home\Home Rich\01 Plots\60638_P&P-F14 Mon, Aug/17/20 01:01pm

NO.	DATE	REVISION

STATE	PROJECT DESIGNATION	YEAR	SHEET NO.	TOTAL SHEETS
ALASKA	PENDING/NFHWY00355	2020	F15	F21

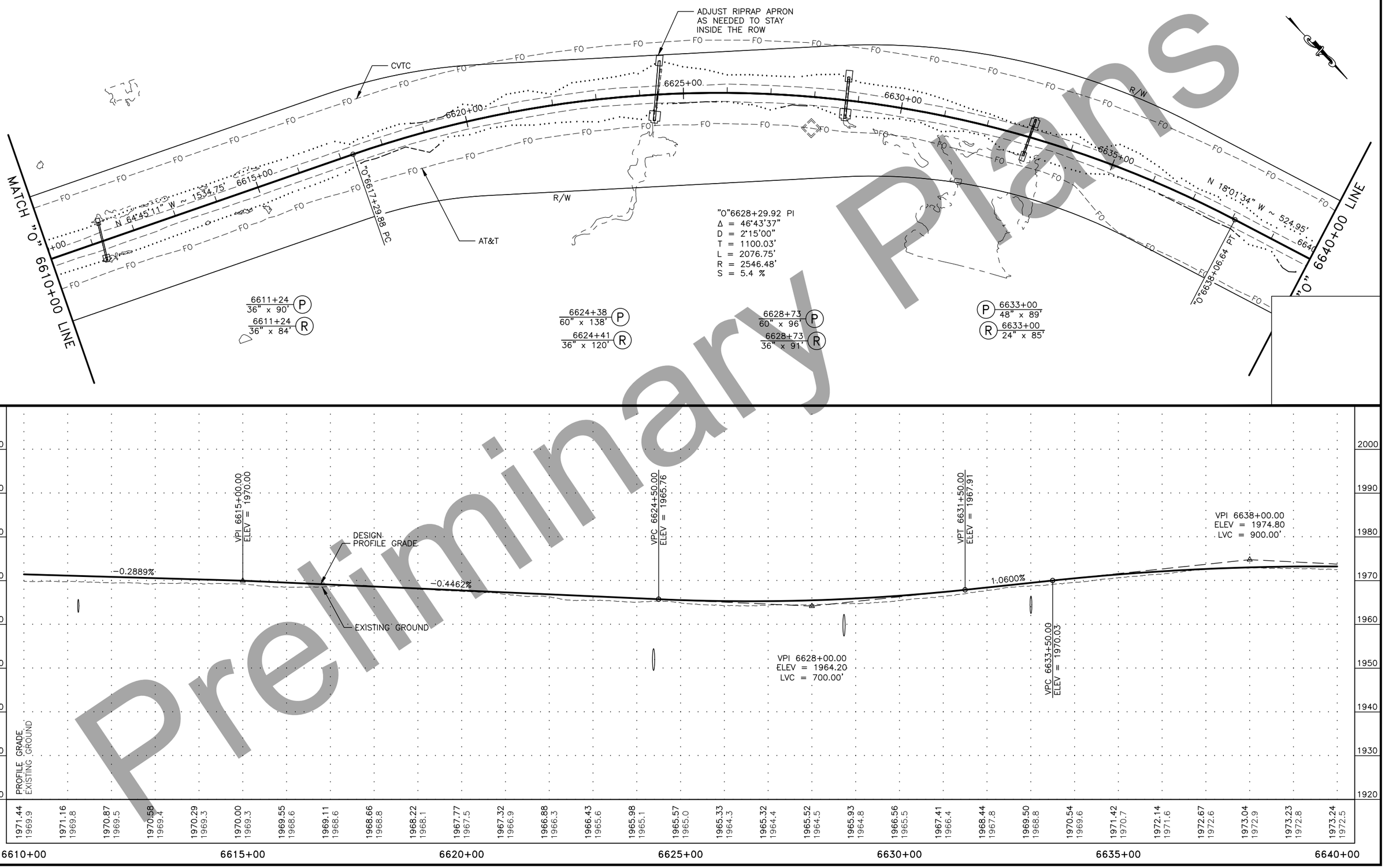

Preliminary Plans

PLANS DEVELOPED BY: STATE OF ALASKA DEPARTMENT OF TRANSPORTATION & PUBLIC FACILITIES, NORTHERN REGION, 2301 PEGER ROAD, FAIRBANKS, AK 99709 (907)451-2200
C:\Users\jbergstrom\Desktop\Home Work Home\Home Rich\01 Plots\60638_P&P-F15 Thu, Oct/08/20 02:19pm

NO.	DATE	REVISION

STATE	PROJECT DESIGNATION	YEAR	SHEET NO.	TOTAL SHEETS
ALASKA	PENDING/NFHWY00355	2020	F16	F21

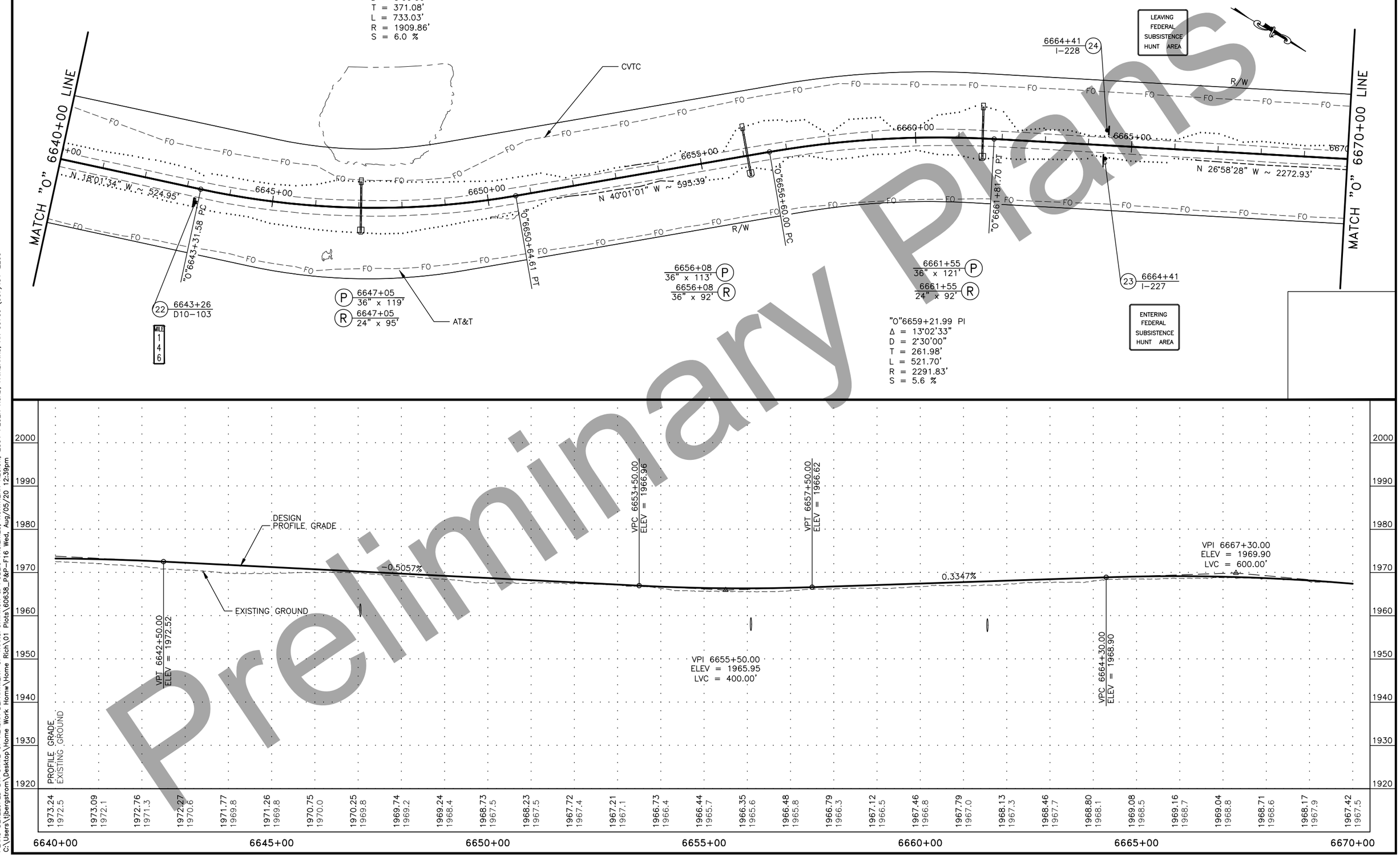

Preliminary Plans

PLANS DEVELOPED BY: STATE OF ALASKA DEPARTMENT OF TRANSPORTATION & PUBLIC FACILITIES, NORTHERN REGION, 2301 PEGER ROAD, FAIRBANKS, AK 99709 (907)451-2200
C:\Users\jbergstrom\Desktop\Home Work Home\Home Rich\01 Plots\60638_P&P-F16 Wed, Aug/05/20 12:39pm

NO.	DATE	REVISION

STATE	PROJECT DESIGNATION	YEAR	SHEET NO.	TOTAL SHEETS
ALASKA	PENDING/NFHWY00355	2020	F17	F21

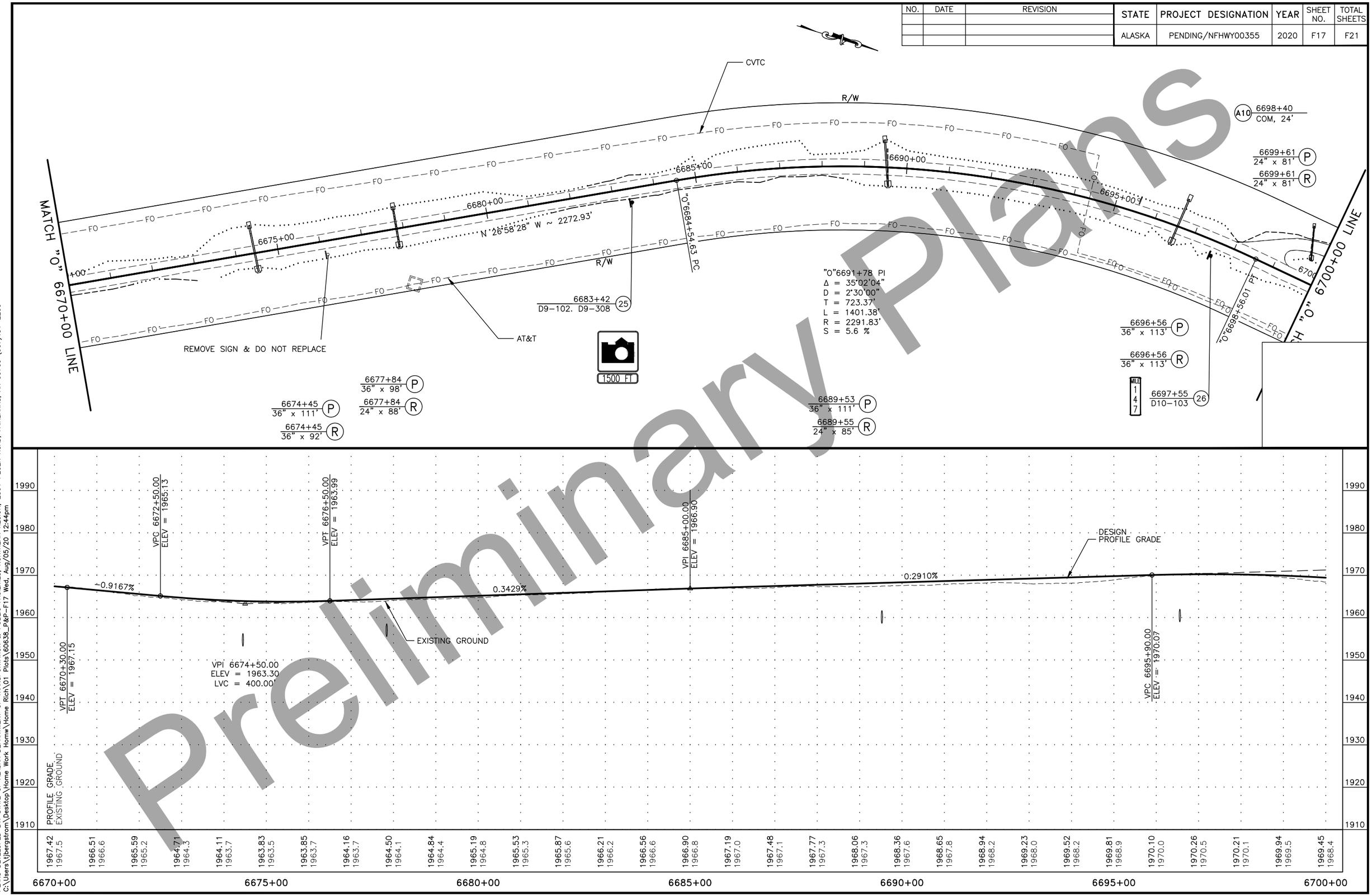

Preliminary Plans

PLANS DEVELOPED BY: STATE OF ALASKA DEPARTMENT OF TRANSPORTATION & PUBLIC FACILITIES, NORTHERN REGION, 2301 PEGER ROAD, FAIRBANKS, AK 99709 (907)451-2200
C:\Users\jbergstrom\Desktop\Home Work Home\Home Rich\01 Plots\60638_P&P-F17 Wed, Aug/05/20 12:44pm

NO.	DATE	REVISION

STATE	PROJECT DESIGNATION	YEAR	SHEET NO.	TOTAL SHEETS
ALASKA	PENDING/NFHWY00355	2020	F18	F21

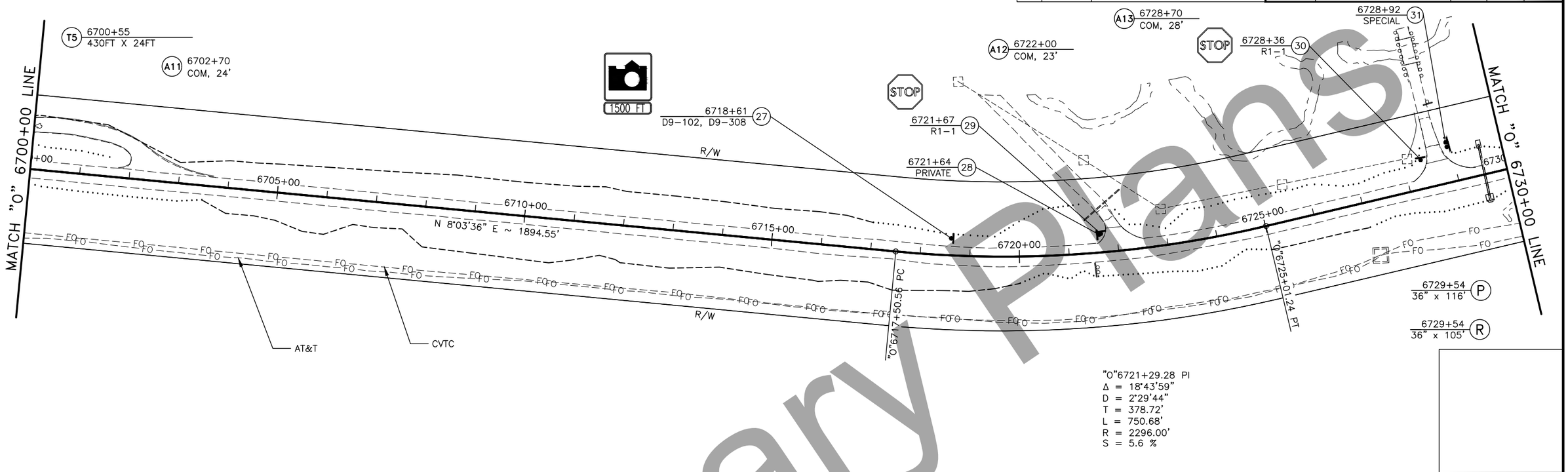

"O"6721+29.28 PI
Δ = 18°43'59"
D = 2°29'44"
T = 378.72'
L = 750.68'
R = 2296.00'
S = 5.6 %

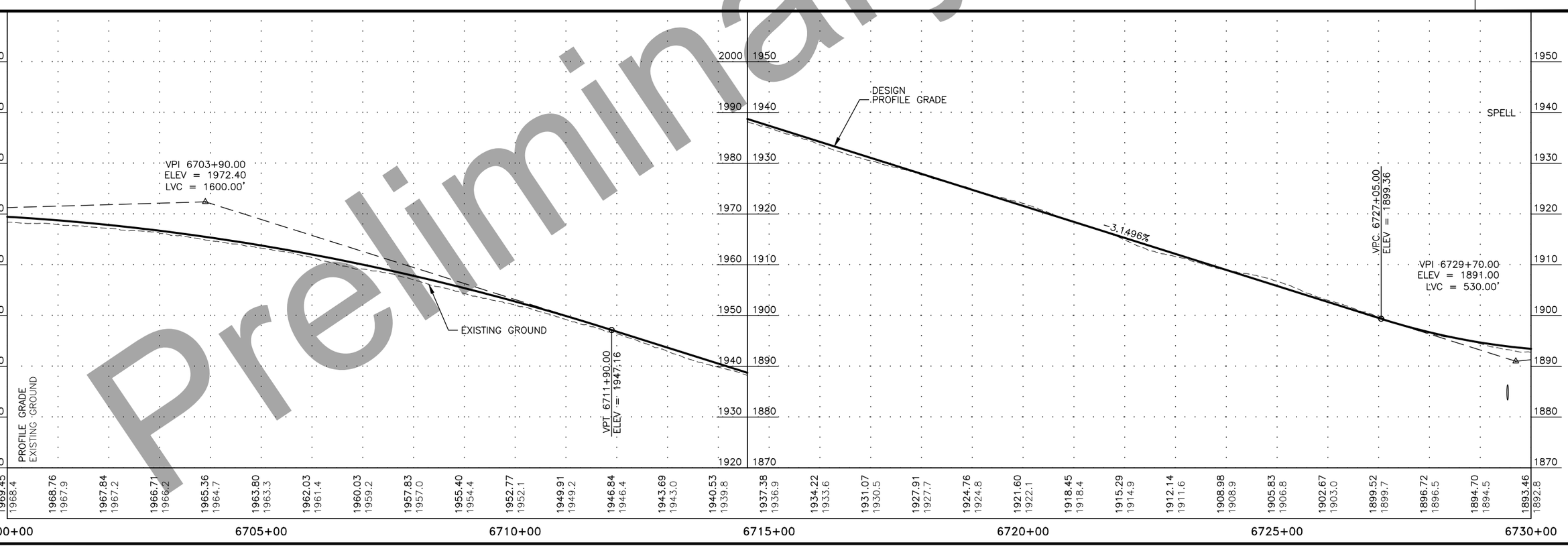

Preliminary Plans

PLANS DEVELOPED BY: STATE OF ALASKA DEPARTMENT OF TRANSPORTATION & PUBLIC FACILITIES, NORTHERN REGION, 2301 PEGER ROAD, FAIRBANKS, AK 99709 (907)451-2200
C:\Users\jbergstrom\Desktop\Home Work Homw\Home Rich\01 Plots\60638_P&P-F18 Wed, Aug/05/20 12:49pm

NO.	DATE	REVISION

STATE	PROJECT DESIGNATION	YEAR	SHEET NO.	TOTAL SHEETS
ALASKA	PENDING/NFHWY00355	2020	F19	F21

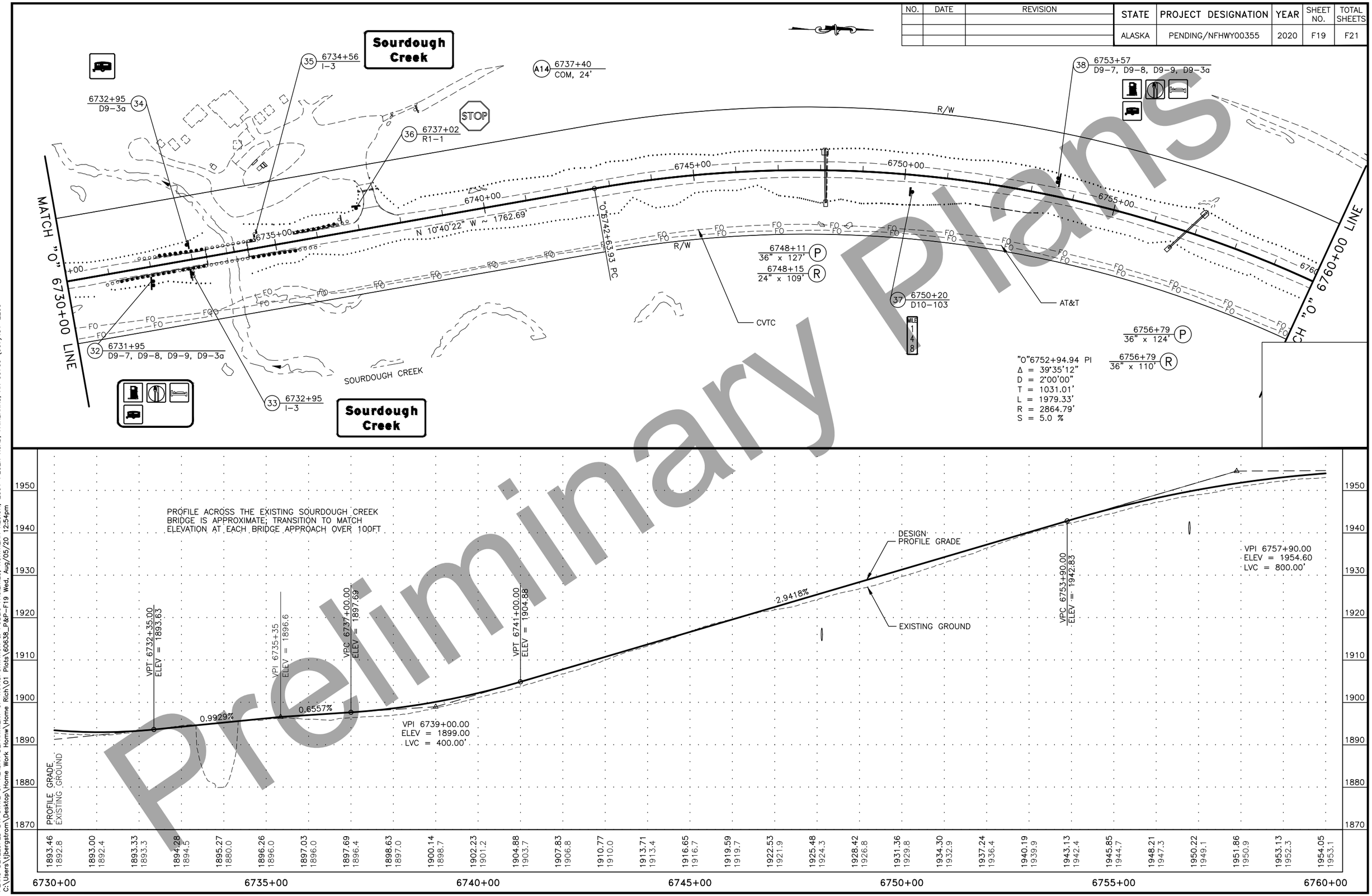

Preliminary Plans

PLANS DEVELOPED BY: STATE OF ALASKA DEPARTMENT OF TRANSPORTATION & PUBLIC FACILITIES, NORTHERN REGION, 2301 PEGER ROAD, FAIRBANKS, AK 99709 (907)451-2200
C:\Users\jbergstrom\Desktop\Home Work Home\Home Rich\01 Plots\60638_P&P-F19 Wed, Aug/05/20 12:54pm

NO.	DATE	REVISION

STATE	PROJECT DESIGNATION	YEAR	SHEET NO.	TOTAL SHEETS
ALASKA	PENDING/NFHWY00355	2020	F20	F21

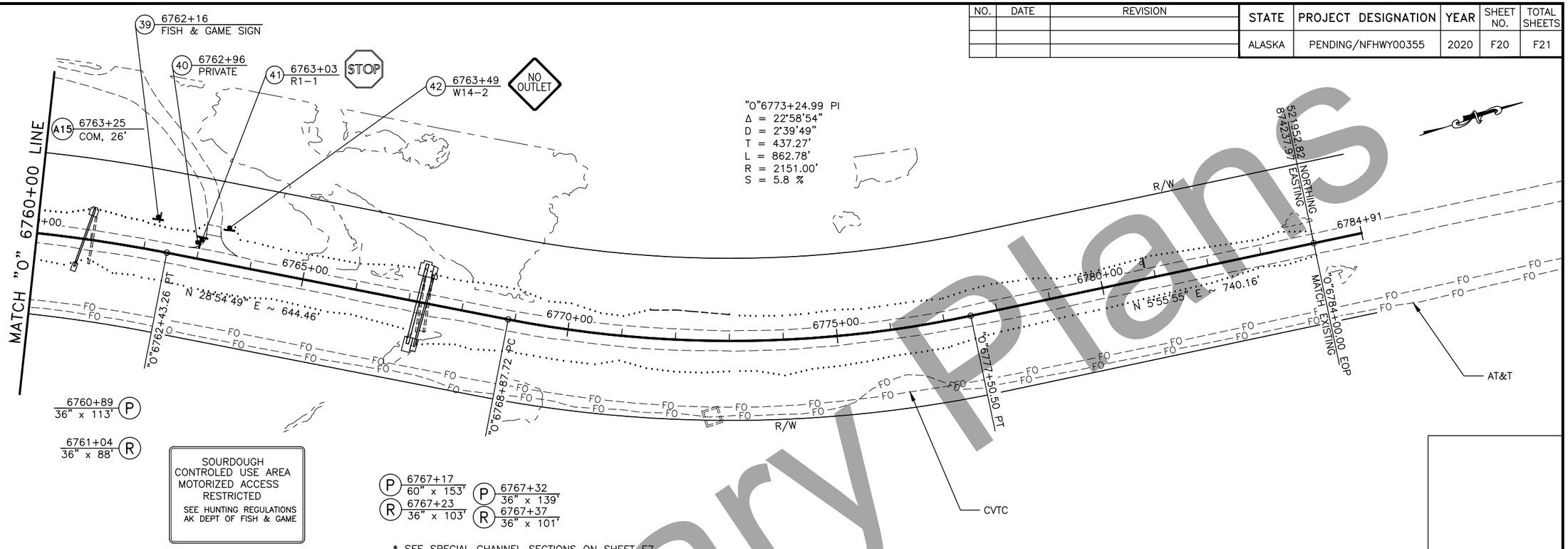

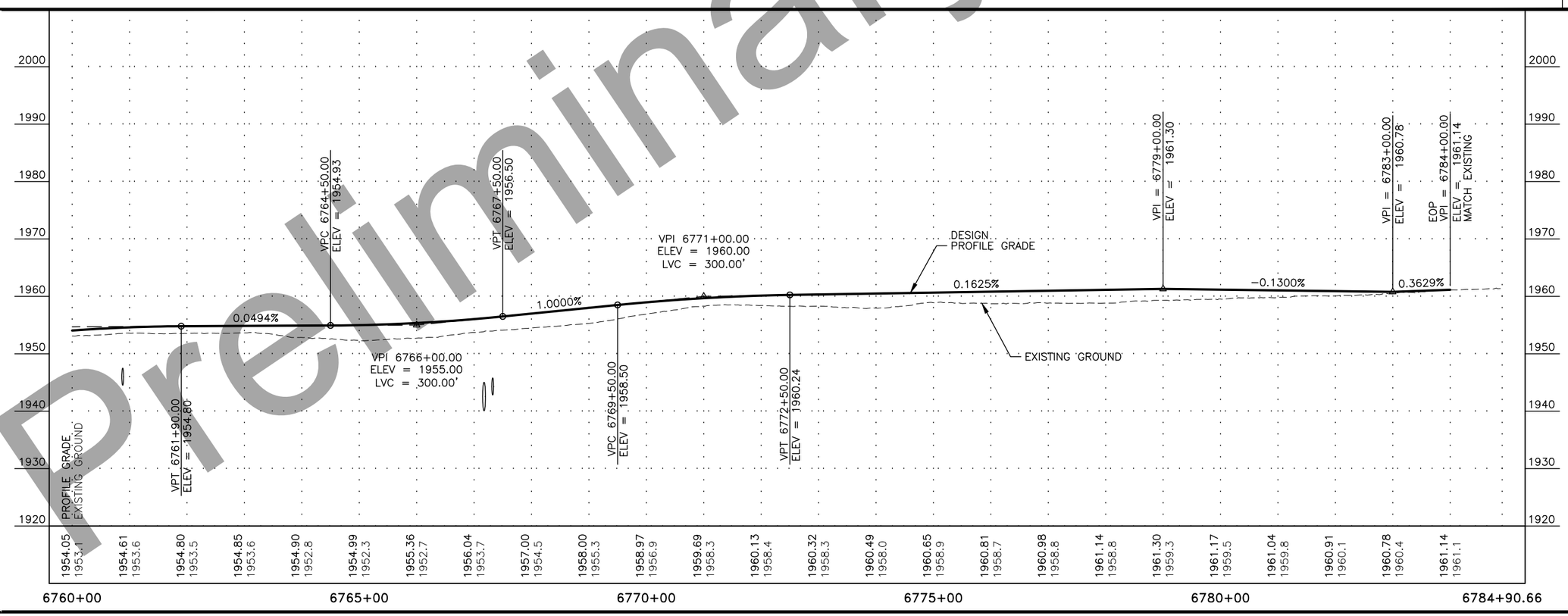

Preliminary Plans

PLANS DEVELOPED BY: STATE OF ALASKA DEPARTMENT OF TRANSPORTATION & PUBLIC FACILITIES, NORTHERN REGION, 2301 PEGER ROAD, FAIRBANKS, AK 99709 (907)451-2200
C:\Users\jbergstrom\Desktop\Home Work Home\Home Rich\01 Plots\60638_P&P-F20 Wed, Aug/05/20 12:36pm

NO.	DATE	REVISION

STATE	PROJECT DESIGNATION	YEAR	SHEET NO.	TOTAL SHEETS
ALASKA	PENDING/NFHWY00355	2020	F21	F21

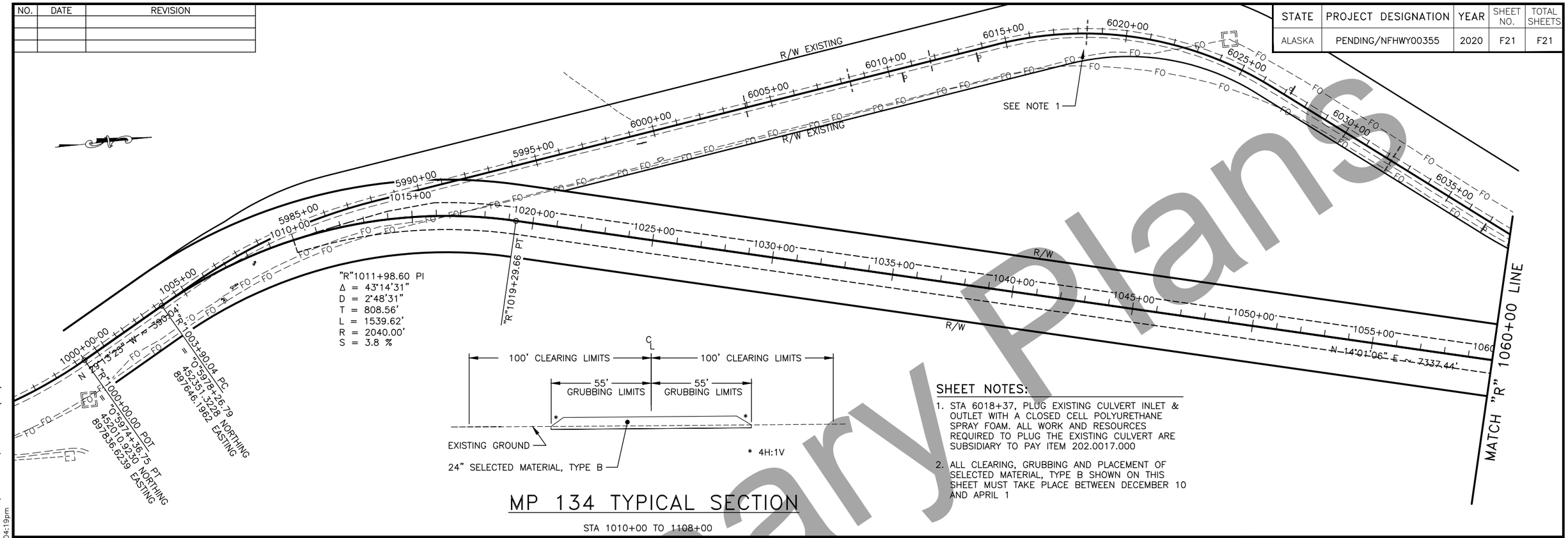

MP 134 TYPICAL SECTION

STA 1010+00 TO 1108+00

SHEET NOTES:

1. STA 6018+37, PLUG EXISTING CULVERT INLET & OUTLET WITH A CLOSED CELL POLYURETHANE SPRAY FOAM. ALL WORK AND RESOURCES REQUIRED TO PLUG THE EXISTING CULVERT ARE SUBSIDIARY TO PAY ITEM 202.0017.000
2. ALL CLEARING, GRUBBING AND PLACEMENT OF SELECTED MATERIAL, TYPE B SHOWN ON THIS SHEET MUST TAKE PLACE BETWEEN DECEMBER 10 AND APRIL 1

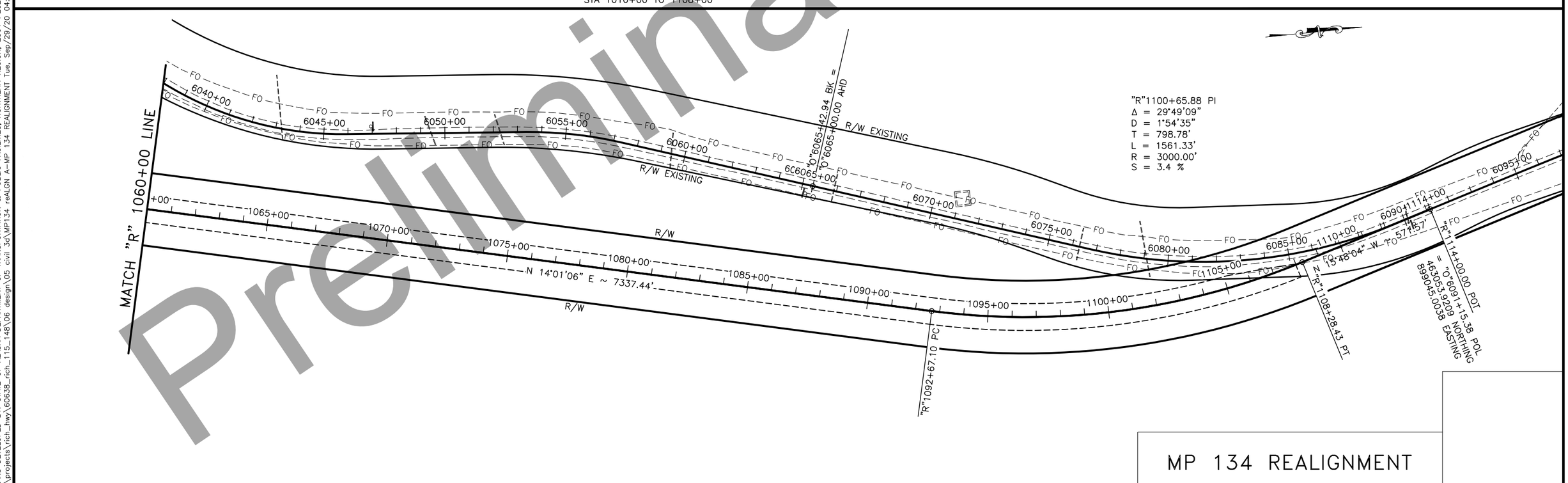

MP 134 REALIGNMENT

Preliminary Plans

PLANS DEVELOPED BY: STATE OF ALASKA DEPARTMENT OF TRANSPORTATION & PUBLIC FACILITIES, NORTHERN REGION, 2301 PEGER ROAD, FAIRBANKS, AK 99709 (907)451-2200
H:\projects\rich_hwy\60638_rich_1115_148\06 design\05 civil 3d\MP134 reALGN A-MP 134 REALIGNMENT Tue, Sep/29/20 04:19pm

STATE	PROJECT DESIGNATION	YEAR	SHEET NO.	TOTAL SHEETS
ALASKA	PENDING/NFHWY00355	2020	G1	G2

APPROACH SUMMARY

APPROACH	CENTERLINE STATION	LT	RT	ANGLE (DEG)	WIDTH (FT)	RADIUS LT (FT)	RADIUS RT (FT)	LANDING LENGTH (FT)	LANDING PROFILE GRADE (%)	DRIVEWAY LENGTH (FT)	DRIVEWAY PROFILE GRADE (%)	DRIVEWAY TYPE	REMARKS
A1	"0"6228+10	X		90	24	38	45	30	−2	10	−5.2	COMMERCIAL	
A2	"0"6238+80	X	X	120	14	26	40	10	−2	22	−5.7	RESIDENTIAL	
A3	"0"6284+30		X	100	14	50	20	10	−3.8	20	−5	RESIDENTIAL	
A4	"0"6366+60	X		60	20	98	20	23	−2	N/A	N/A	COMMERCIAL	
A5	"0"6391+00	X		110	18	15	20	30	−3	14	−10	COMMERCIAL	
A6	"0"6399+00	X		150	24	120	10	30	−5	N/A	N/A	COMMERCIAL	SEE G2 SEPARATED TURNOUT DETAILS
A7	"0"6404+60	X		33	24	10	126	30	3.2	N/A	N/A	COMMERCIAL	SEE G2 SEPARATED TURNOUT DETAILS
A8	"0"6478+40		X	90	20	18	13	10	−2	10	−5	RESIDENTIAL	
A9	"0"6500+25		X	100	14	36	17	10	−2	30	−8.9	RESIDENTIAL	
A10	"0"6698+40	X		138	24	298	20	30	−1.27	N/A	N/A	COMMERCIAL	SEE G2 SEPARATED TURNOUT DETAILS
A11	"0"6702+70	X		45	24	20	279	30	−1.4	N/A	N/A	COMMERCIAL	SEE G2 SEPARATED TURNOUT DETAILS
A12	"0"6722+00	X		110	23	35	87	30	−5.6	54	−10.8	COMMERCIAL	
A13	"0"6728+70	X		90	28	60	68	30	−2	90	−8	COMMERCIAL	SOURDOUGH CREEK CAMPGROUND
A14	"0"6737+40	X		90	24	65	60	30	−2	56	−8	COMMERCIAL	SOURDOUGH CREEK ROAD HOUSE
A15	"0"6763+25	X		90	26	26	37	30	−2	18	−8	COMMERCIAL	

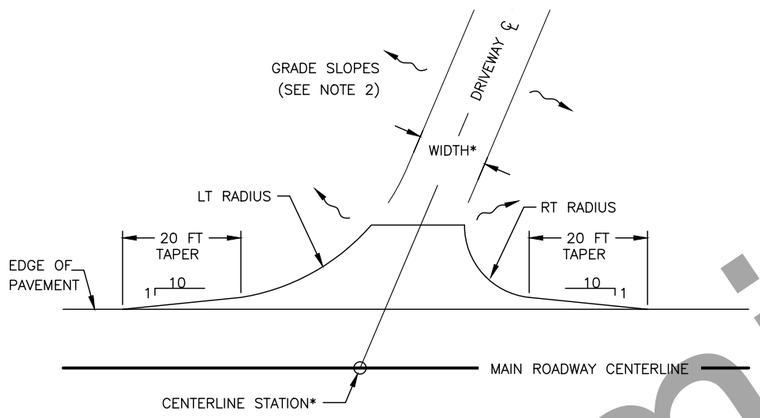

APPROACH PLAN VIEW

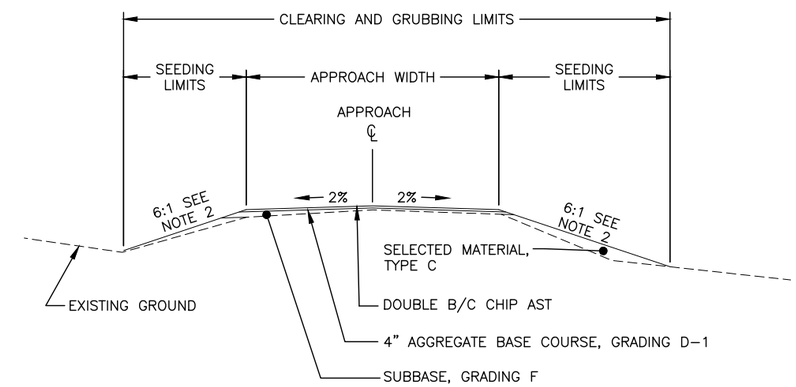

APPROACH TYPICAL SECTION

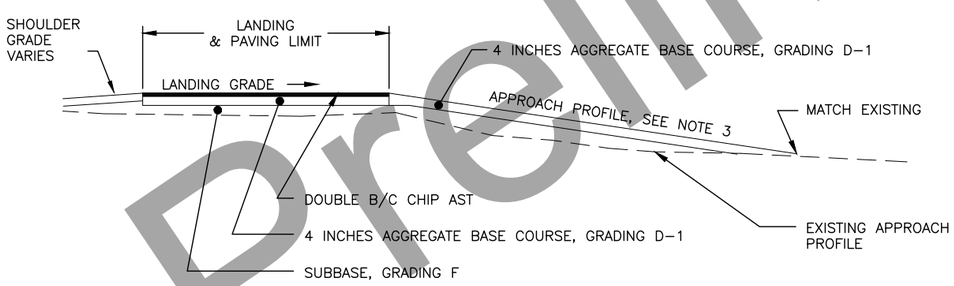

APPROACH PROFILE CROSS-SECTION TYPICAL

APPROACH DETAILS

APPROACH DETAIL NOTES:

1. REMOVAL OF EXISTING APPROACH EMBANKMENT WILL NOT BE MEASURED FOR PAYMENT AND IS SUBSIDIARY TO 639 SERIES PAY ITEM(S)
2. APPROACH FILL SLOPES SHALL BE 6H:1V BETWEEN THE ROAD SHOULDER AND LANDING. BEYOND THE LANDING, WARP APPROACH EMBANKMENT SLOPES FROM 6:1 (H:V) TO MATCH EXISTING OVER 50 FT OR AS APPROVED BY THE ENGINEER. GRADING OF SLOPES IS SUBSIDIARY TO EMBANKMENT CONSTRUCTION
3. GRADE APPROACH PROFILE TO CREATE A SMOOTH TRANSITION BETWEEN THE LANDING AND THE EXISTING APPROACH PROFILE
4. APPROACH RADIUS BEGINS AT THE END OF THE TAPER.
5. GRADE SURROUNDING AREA TO DRAIN AS NEEDED TO ENSURE POSITIVE DRAINAGE AWAY FROM THE ROADWAY AND APPROACH EMBANKMENTS.
6. DRIVEWAY AND APPROACH TERMS ARE USED INTERCHANGEABLE.

APPROACH SUMMARY & DETAILS

Preliminary Plans

PLANS DEVELOPED BY: STATE OF ALASKA DEPARTMENT OF TRANSPORTATION & PUBLIC FACILITIES, NORTHERN REGION, 2301 PEGER ROAD, FAIRBANKS, AK 99709 (907)451-2200
C:\Users\ljbergstrom\Desktop\Home Work Home\Home Rich\03 Drafting\Approach 2-G1 APPROACH SUMMARY & DETAILS Thu, Oct/08/20 03:42pm

STATE	PROJECT DESIGNATION	YEAR	SHEET NO.	TOTAL SHEETS
ALASKA	PENDING/NFHWY00355	2020	G2	G2

PARALLEL TURNOUT SUMMARY

ITEM NUMBER	LT	RT	WIDTH (FT)	LENGTH (FT)	STATION BEGIN TAPER	STATION BEGIN FULL WIDTH	STATION END FULL WIDTH	STATION END TAPER	REMARKS
T1	X		25	150	6232+80	6233+30	6234+80	6235+30	PARALLEL TURNOUT
T2	X		20	175	6294+50	6295+25	6297+00	6297+50	PARALLEL TURNOUT
T3		X	24	180	6360+75	6361+30	6363+10	6363+70	PARALLEL TURNOUT

TURNOUT NOTES:

1. TURNOUT WIDTH SHALL BE PARALLEL TO THE ROAD CENTERLINE
2. MATERIALS REQUIRED TO CONSTRUCT TURNOUTS WILL BE PAID SEPARATELY UNDER THE RESPECTIVE PAY ITEMS LISTED IN THE BID SCHEDULE
6. GRADE SIDE SLOPES & DITCHES USING SMOOTH TRANSITION TO MATCH EXISTING GROUND AND PROVIDE POSITIVE DRAINAGE.

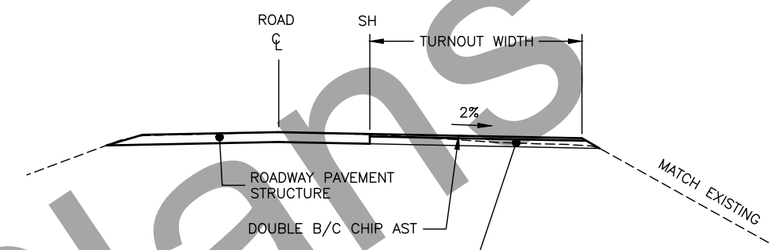

* USE AGGREGATE BASE COURSE, GRADING D-1 OVER CABC TO ESTABLISH FINISH GRADE PRIOR TO PAVING

PARALLEL TURNOUT CROSS SECTION

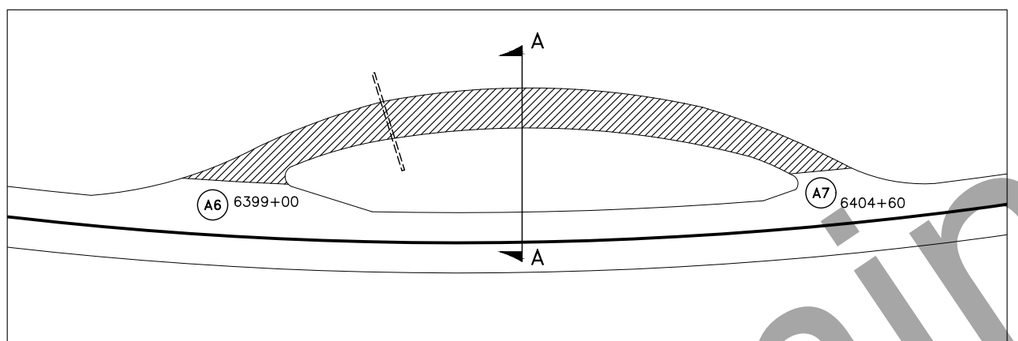

SEPARATED TURNOUT T4
STA 6401+80

SEPARATED TURNOUT SUMMARY

ITEM NUMBER	STATION MIDPOINT	LT	RT	WIDTH (FT)	LENGTH (FT)	AREA (SY)	REMARKS
T4	6401+80	X		24	410	1,200	
T5	6700+55	X		24	430	1,400	

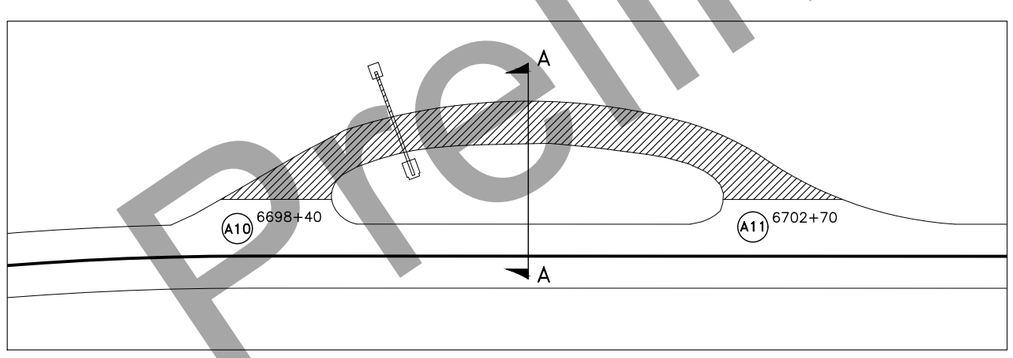

SEPARATED TURNOUT T5
STA 6700+55

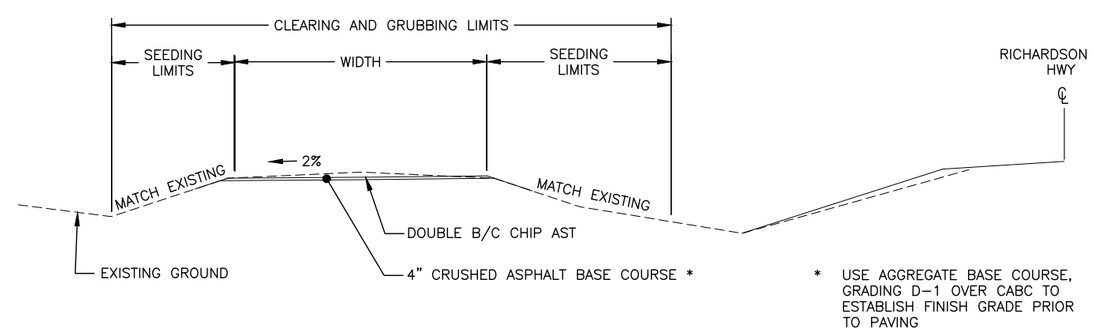

* USE AGGREGATE BASE COURSE, GRADING D-1 OVER CABC TO ESTABLISH FINISH GRADE PRIOR TO PAVING

SEPARATED TURNOUT:
TYPICAL SECTION A-A

TURNOUT SUMMARY & DETAILS

Preliminary Plans

PLANS DEVELOPED BY: STATE OF ALASKA DEPARTMENT OF TRANSPORTATION & PUBLIC FACILITIES, NORTHERN REGION, 2301 PEGER ROAD, FAIRBANKS, AK 99709 (907)451-2200
C:\Users\jbergstrom\Desktop\Home Work Home\Home Rich\03 Drafting\Approach 2-02 TURNOUTS Wed, Aug/05/20 01:33pm

NO.	DATE	REVISION

STATE	PROJECT DESIGNATION	YEAR	SHEET NO.	TOTAL SHEETS
ALASKA	PENDING/NFHWY00355	2020	H1	H5

SIGNING SUMMARY

LOC. NO.	STATION	LOCATION LT.	LOCATION RT.	ASDS CODE	LEGEND	SIZE H X V (INCHES)	BRACING/ FRAMING BRACED	BRACING/ FRAMING FRAMED	AREA (SQ.FT.)	MTG. HGT. (FT.)	DIR.	POST TYPE	POST SIZE (INCHES)	POST NO.	REMARKS
1	6223+38		X	D10-203	MILE 138	10 X 36			2.50		S/N	PST	2.5	1	
2	6225+41		X	D12-5	511 Travel Info	48 X 60	X		20.00		S	TS	4	1	SEE NOTE 13
3	6227+75	X		R1-1	STOP	30 X 30	X		6.25		S	PST	2.5	1	
4	6229+90		X	I-3	Poplar Grove Creek	48 X 18	X		6.00		S	PST	2.5	1	
5	6232+44	X		I-3	Poplar Grove Creek	48 X 18	X		6.00		N	PST	2.5	1	
6	6276+01		X	D10-203	MILE 139	14 X 36	X		3.50		S/N	PST	2.5	1	
7	6280+50		X	D9-105	P	24 X 24			4.00		S	PST	2.5	1	
				D9-105	PARKING	24 X 6			1.00						
				D9-308	1500 FT	24 X 6			1.00						
8	6309+85		X	R2-1	SPEED LIMIT 65	36 X 48	X		12.00		S	PST	2.5	1	
9	6309+94	X		R2-1	SPEED LIMIT 65	36 X 48	X		12.00		N	PST	2.5	1	
10	6311+85	X		D9-105	P	24 X 24			4.00		N	PST	2.5	1	
				D9-105	PARKING	24 X 6			1.00						
				D9-308	1500 FT	24 X 6			1.00						
11	6327+79		X	D10-203	MILE 140	14 X 36			3.50		S/N	PST	2.5	1	
12	6381+49		X	D10-203	MILE 141	14 X 36			3.50		S/N	PST	2.5	1	
13	6383+79		X	D9-105	P	24 X 24			4.00		S	PST	2.5	1	
				D9-105	PARKING	24 X 6			1.00						
				D9-308	1500 FT	24 X 6			1.00						
14	6418+85	X		D9-105	P	24 X 24			4.00		N	PST	2.5	1	
				D9-105	PARKING	24 X 6			1.00						
				D9-308	1500 FT	24 X 6			1.00						
15	6436+04		X	D10-203	MILE 142	14 X 36			3.50		S/N	PST	2.5	1	
16	6488+10		X	D10-203	MILE 143	14 X 36			3.50		S/N	PST	2.5	1	
17	6537+91		X	D10-203	MILE 144	14 X 36			3.50		S/N	PST	2.5	1	
18	6574+32		X	W1-2R	RIGHT CURVE (SYM)	30 X 30	X		6.25		S	PST	2.5	1	
				WB-1	60 MPH	24 X 24			4.00						
19	6584+36	X		W1-2L	LEFT CURVE (SYM)	30 X 30	X		6.25		N	PST	2.5	1	
				WB-1	60 MPH	24 X 24			4.00						
20	6593+06		X	D10-203	MILE 145	14 X 36			3.50		S/N	PST	2.5	1	
21	6594+96		X	D2-2	Paxson 40 Delta Junction 120	89 X 30		X	18.54		W	TS	3	2	SEE NOTES 13 AND 14
22	6643+26		X	D10-203	MILE 146	14 X 36			3.50		S/N	PST	2.5	1	
								SUBTOTAL =	155.79						

POST TYPE LEGEND:

PST = PERFORATED STEEL TUBE
TS = TUBE STEEL

SIGNING NOTES

1. REMOVE AND DISPOSE OF ALL EXISTING SIGN FOUNDATIONS WITHIN THE PROJECT LIMITS, EXCEPT THOSE DESIGNATED FOR REINSTALLATION, SALVAGE OR OTHERWISE NOTED. ALL SALVAGED SIGN PANELS REMOVED AND NOT DESIGNATED FOR REINSTALLATION, SHALL BE DELIVERED TO TAZLINA MAINTENANCE STATION LOCATED AT MP110 ON THE RICHARDSON HIGHWAY.
2. REUSE ALL ALYESKA SIGN PANELS.
3. INSTALL MILEPOST SIGNS (D10-203 SERIES) IN ACCORDANCE WITH STANDARD STANDARD PLAN S-05.02, EXCEPT WITH A 15 TO 30 FOOT OFFSET REDUCE THE OFFSET AS NECESSARY SO THE BOTTOM OF THE SIGN IS NO MORE THAN 15 FEET ABOVE THE GROUND. THE SIGN OFFSET SHALL NOT BE LESS THAN THE OFFSETS SHOWN IN S-05.02.
4. MOUNTING HEIGHTS ARE PER STANDARD PLAN S-05.02 UNLESS OTHERWISE NOTED.
5. DETERMINE POST LENGTHS IN THE FIELD. DO NOT EXTEND POSTS ABOVE TOP OF SIGN.
6. INSTALL PST SIGN POSTS WITH SLEEVE TYPE SOIL EMBEDMENT. EMBED PST IN SLEEVE 12"-24" PER STANDARD PLAN S-30.05. ATTACH THE SIGN POST TO THE SLEEVE USING GALVANIZED 3/8" BOLT, NUT, SPLIT LOCK WASHER AND TWO FLAT WASHERS.
7. 1/4" X 1 1/2" ALUMINUM ALLOY 6061-T6 BAR MAY ALSO BE USED TO FABRICATE SIGN BRACES AS SHOWN ON STANDARD PLAN S-01.02.
8. ATTACH ALL SIGNS TO THEIR SUPPORTS WITH 3/8" BOLTS, EXCEPT ATTACH UNFRAMED SIGNS TO PST POSTS WITH ALUMINUM DRIVE RIVETS. WIND WASHERS ARE NOT REQUIRED WITH DRIVE RIVETS. INCLUDE SPLIT LOCK WASHERS WHEN BOLTS ARE USED.
9. ALL FASTENER HARDWARE SHALL MEET THE REQUIREMENTS OF THE "FASTENER SPECIFICATION TABLE" ON SHEET H1.
10. MAINTAIN EXISTING SIGNS UNTIL NEW SIGNS ARE INSTALLED. DO NOT LEAVE DUPLICATE OR CONFLICTING SIGNING UP AT ANY TIME.
11. ALL SIGNS NOTED FOR REMOVAL AND REINSTALLATION SHALL BE REPLACED AT THE CONTRACTOR'S EXPENSE IF THEY ARE DAMAGED DURING THE RELOCATION EFFORT.
12. LOCATE AND PROTECT ALL NEW AND EXISTING UNDERGROUND UTILITIES, INCLUDING BUT NOT LIMITED TO: PIPELINES, INTERCONNECT CABLES, SIGNAL SYSTEMS, LIGHTING SYSTEMS, STORM AND SANITARY SEWERS, WATER SYSTEMS, AND TELEPHONE AND ELECTRICAL CABLES, PRIOR TO INSTALLING SIGN POSTS. NOT ALL EXISTING UTILITIES MAY BE SHOWN ON THE PLANS.
13. INSTALL WEATHER TIGHT CAPS ON ALL TS POSTS.
14. INSTALL FRANGIBLE COUPLING SYSTEMS IN ACCORDANCE WITH STANDARD PLAN S-31.02.
15. HINGED JOINTS WITH FRANGIBLE FUSE PLATES ARE REQUIRED ON ALL MULTIPLE POST SIGNS WITH FRANGIBLE COUPLING SYSTEMS. THE HINGE LOCATION ON ALL POSTS SHALL BE THE SAME DISTANCE BELOW THE SIGN, INSTEAD OF THE 6" MINIMUM SHOWN ON STANDARD PLAN S-31.02. SEE MANUFACTURER'S SPECIFICATION FOR HINGE LOCATION BELOW SIGN.
16. ALYESKA APPROACH SIGNS ARE PRIVATELY OWNED AND MAINTAINED. MOST OF THESE SIGNS WILL NEED TO BE RELOCATED DUE TO MODIFICATIONS TO THE APPROACHES. REUSE THE EXISTING SIGNS AND POSTS. NEW SOIL EMBEDMENT SLEEVES ARE REQUIRED. THIS WORK IS SUBSIDIARY TO 615 PAY ITEMS. ANY SIGNS DAMAGED BY THE CONTRACTOR WILL BE REPLACED AT THE CONTRACTOR'S EXPENSE.
17. THE 4" MOUNTING AREA ON MILEPOST SIGNS (D10-203 SERIES) SHALL BE BARE ALUMINUM. THIS ELIMINATES THE OPTION OF INSTALLING GREEN REFLECTIVE SHEETING IN THIS AREA AS NOTED IN THE ASDS.
18. STOP (R1-1) SIGN LOCATIONS MAY NEED ADJUSTMENT IN THE FIELD. THE ENGINEER WILL APPROVE FINAL LOCATIONS.
19. CLEARING , AS DIRECTED BY THE ENGINEER MAY BE REQUIRED TO ENSURE ADEQUATE VISIBILITY OF SIGNS. THIS WORK IS SUBSIDIARY TO PAY ITEM 615.0001.0000.

FASTENER SPECIFICATION TABLE

FASTENERS	STEEL	STAINLESS STEEL
BOLTS	ASTM A 307	ASTM F 593
NUTS	ASTM A 563	ASTM F 594
WASHERS	ASTM F 844	ASTM A 480

THESE SPECIFICATIONS APPLY TO ALL SIGN FASTENER HARDWARE ON THE PROJECT.

SIGNING SUMMARY

Preliminary Plans

PLANS DEVELOPED BY: STATE OF ALASKA DEPARTMENT OF TRANSPORTATION & PUBLIC FACILITIES, NORTHERN REGION, 2301 PEGER ROAD, FAIRBANKS, AK 99709 (907)451-2200
C:\Users\jbergstrom\Desktop\Home Work Hornw\Home Rich\03 Drafting\SIGN-Hwy-Gen Fri, Aug/07/20 11:51am

NO.	DATE	REVISION

STATE	PROJECT DESIGNATION	YEAR	SHEET NO.	TOTAL SHEETS
ALASKA	PENDING/NFHWY00355	2020	H2	H5

SIGNING SUMMARY

LOC. NO.	STATION	LOCATION LT.	LOCATION RT.	ASDS CODE	LEGEND	SIZE H X V (INCHES)	BRACING/ FRAMING BRACED	BRACING/ FRAMING FRAMED	AREA (SQ.FT.)	MTG. HGT. (FT.)	DIR.	POST TYPE	POST SIZE (INCHES)	POST NO.	REMARKS
23	6664+41		X	I-227	Entering Subsistence		X				S	PST	2.5	1	REUSE PANEL
24	6664+41	X		I-228	Leaving Subsistence		X				N	PST	2.5	1	REUSE PANEL
25	6683+42		X	D9-102	CAMERA (SYM)	24 X 24			4.00		W	PST	2.5	1	
				D9-308	1500 FT	24 X 6			1.00						
26	6697+55		X	D10-203	MILE 147	14 X 36			3.50		S/N	PST	2.5	1	
27	6718+61	X		D9-102	CAMERA SYM	24 X 24			4.00		W	PST	2.5	1	
				D9-308	1500 FT	24 X 6			1.00						
28	6721+64	X		PRIVATE	ALYESKA SIGNS	X					S/N	PST	2.5	1	REUSE ALYESKA PANELS, NEW POST
29	6721+67	X		R1-1	STOP	30 X 30			6.25		E	PST	2.5	1	
30	6728+36	X		R1-1	STOP	30 X 30			6.25		E	PST	2.5	1	
31	6728+92	X		SPECIAL	SOURDOUGH CAMP GROUND SIGN						N	PST	2.5	1	PROTECT SIGN
32	6731+95		X	SPECIAL	BLANK PANEL	96 X 60		X	40.00		S	TS	4	2	WHITE BORDER ON BLUE BACKGROUND. THIS PANEL IS ATTACHMENT BASE FOR GEN SERVICES SIGNS. SEE NOTE 15
				D9-7	GEN SVCS (GAS SYM)	24 X 24									SEE SHEET H3 FOR LAYOUT DETAIL
				D9-8	GEN SVCS (FOOD SYM)	24 X 24									SEE NOTES 13 AND 14
				D9-9	GEN SVCS (LODGING SYM)	24 X 24									EXISTING SIGN WAS AT STATION 6721+60
				D9-3a	GEN SVCS (CAMPER SYM)	24 X 24									
33	6732+95		X	I-3	Sourdough Creek	42 X 18	X		5.25		S	PST	2.5	1	
34	6732+95	X		D9-3a	GEN SVCS (CAMPER SYM)	24 X 24			4.00		N	PST	2.5	1	OLD POSITION STATION 6736+70
35	6734+56	X		I-3	Sourdough Creek	42 X 18	X		5.25		N	PST	2.5	1	
36	6737+02	X		R1-1	STOP	30 X 30			6.25		E	PST	2.5	1	
37	6750+20		X	D10-203	MILE 148	14 X 36			3.50		S/N	PST	2.5	1	
38	6753+57	X		SPECIAL	(GAS SYM), (FOOD SYM), (LODGING SYM), (CAMPER SYM)						N				REMOVE AND DO NOT REPLACE
39	6762+16	X			Sourdough Controlled Use Area						E				REMOVE AND DO NOT REPLACE
40	6762+96	X		PRIVATE	ALYESKA SIGNS						S/N	PST	2.5	1	REUSE ALYESKA PANELS
41	6763+03	X		R1-1	STOP	30 X 30			6.25		E	PST	2.5	1	
42	6763+49	X		W14-2	NO OUTLET										PROTECT IN PLACE
								SUBTOTAL =	96.50						
								TOTAL =	252.29						

POST TYPE LEGEND:

PST = PERFORATED STEEL TUBE
TS = TUBE STEEL

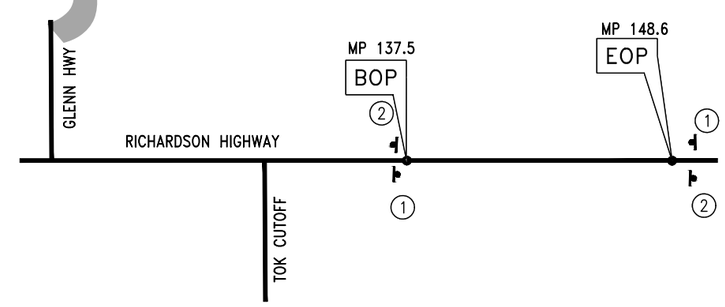

SIGN LEGEND

1 G20-1 ROAD WORK NEXT 12 MILES 60" X 24"

2 G20-2 END ROAD WORK 48" X 24"

PERMANENT CONSTRUCTION SIGNS

NOTE: INSTALL ALL PERMANENT CONSTRUCTION SIGNS ON WOOD POSTS.

SIGNING SUMMARY

Preliminary Plans

PLANS DEVELOPED BY: STATE OF ALASKA DEPARTMENT OF TRANSPORTATION & PUBLIC FACILITIES, NORTHERN REGION, 2301 PEGER ROAD, FAIRBANKS, AK 99709 (907)451-2200
C:\Users\jbergstrom\Desktop\Home Work Homw\Home Rich\03 Drafting\SIGN-Hwy-Gen (2) Wed, Aug/05/20 01:34pm

NO.	DATE	REVISION

STATE	PROJECT DESIGNATION	YEAR	SHEET NO.	TOTAL SHEETS
ALASKA	PENDING/NFHWY00355	2020	H3	H5

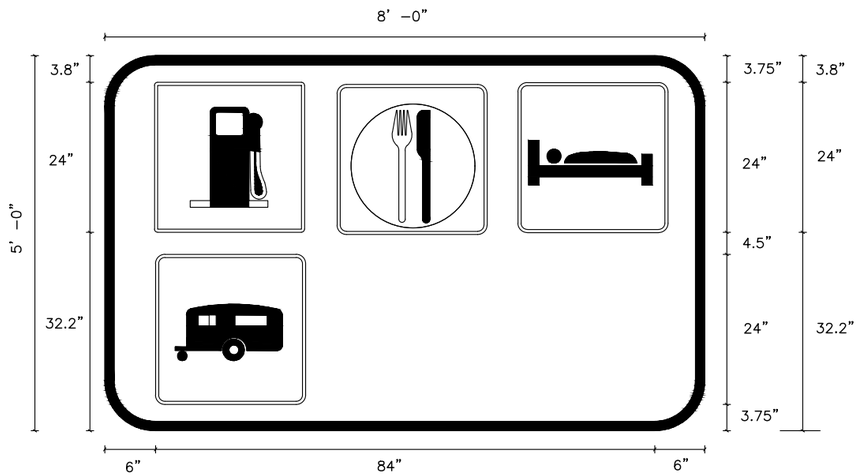

SPECIAL SIGN DETAIL

NOTE:

1. SIGN NUMBER 30, STATION 6732+00.
2. STANDARD SIZE SYMBOLS GAS, FOOD, LODGING, CAMPER.

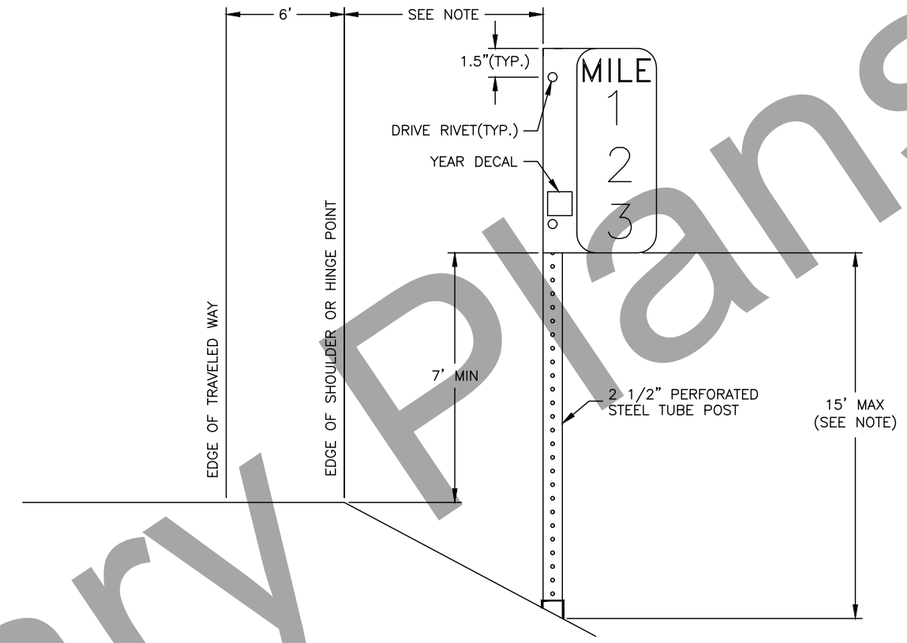

MILEPOST DETAIL

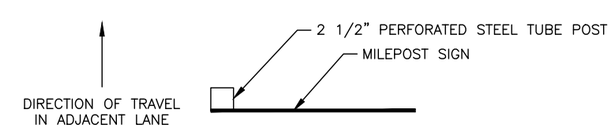

MILEPOST MOUNTING DETAIL

NOTE:

INSTALL MILEPOST SIGNS (D10 SERIES) WITH A 15 TO 30 FOOT OFFSET. REDUCE THE OFFSET AS NECESSARY SO THE BOTTOM OF THE SIGN IS NO MORE THAN 15 FEET AFTER THE GROUND. THE SIGN OFFSET SHALL NOT BE LESS THAN THE OFFSETS SHOWN ON STANDARD PLAN S-05.

SIGN DETAIL (1 OF 2)

Preliminary Plans

PLANS DEVELOPED BY: STATE OF ALASKA DEPARTMENT OF TRANSPORTATION & PUBLIC FACILITIES, NORTHERN REGION, 2301 PEGER ROAD, FAIRBANKS, AK 99709 (907)451-2200
C:\Users\Ubergstrom\Desktop\Home Work Homw\Home Rich\03 Drafting\3 Signs_GuideSign-SIGN DETAIL (1 OF 2) Wed, Aug/05/20 01:35pm

NO.	DATE	REVISION

STATE	PROJECT DESIGNATION	YEAR	SHEET NO.	TOTAL SHEETS
ALASKA	PENDING/NFHWY00355	2020	H4	H5

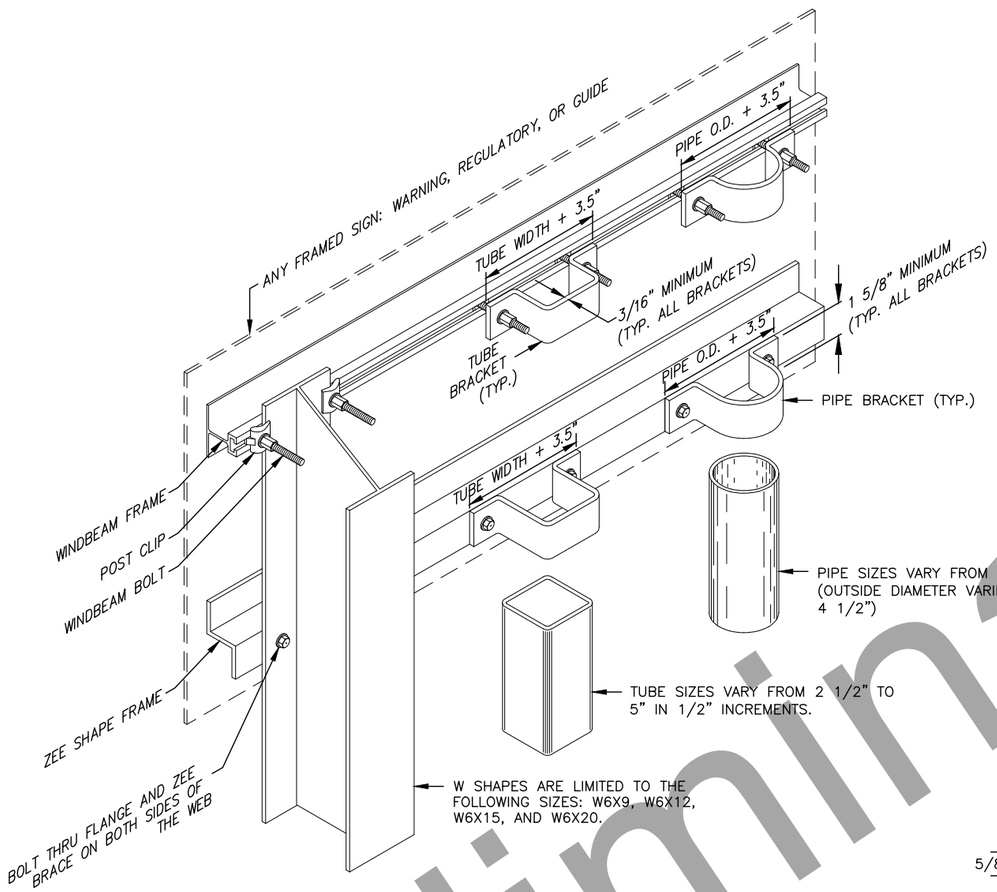

FRAMED SIGN ATTACHMENT BRACKETS

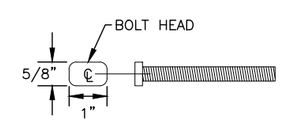

3/8" WINDBEAM BOLT

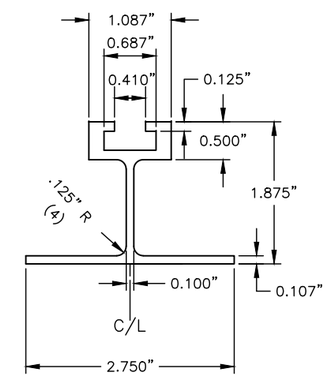

EXTRUDED ALUMINUM WINDBEAM

NOTES:

1. ALUMINUM ALLOY 6061-T6 SHALL BE USED FOR EXTRUDED WINDBEAM AND RIVETS.
2. ATTACH SIGNS TO WINDBEAM WITH 3/6" RIVETS AT 4" STAGGERED SPACING.

NOTES:

1. ATTACH FRAMED SIGNS TO POSTS WHEREVER THE FRAMES CROSS THE POSTS. AT EACH CROSSING, ATTACH THE SIGN USING TWO POST CLIPS ON W-SHAPE POSTS, A U-SHAPED BRACKET ON PIPES OR A BRACKET WITH SQUARE CORNERS ON TUBES.
2. THE TUBE BRACKETS USED ON EVEN INCH SIZE TUBES MAY ALSO BE USED ON TUBES 1/2" SMALLER IN SIZE.
3. THE BRACKET DETAILS SHOWN INDICATE GENERAL DESIGNS ONLY. DESIGNS MAY VARY BY MANUFACTURER.
4. ALUMINUM ALLOY 6061-T6 SHALL BE USED FOR ZEE SHAPE FRAMING AND RIVETS.

SIGN DETAIL (2 OF 2)

Preliminary Plans

PLANS DEVELOPED BY: STATE OF ALASKA DEPARTMENT OF TRANSPORTATION & PUBLIC FACILITIES, NORTHERN REGION, 2301 PEGER ROAD, FAIRBANKS, AK 99709 (907)451-2200
C:\Users\jbergstrom\Desktop\Home Work Homw\Home Rich\03 Drafting\SIGN DETAILS-SIGN DETAIL (2 OF 2) Wed, Aug/05/20 01:36pm

NO.	DATE	REVISION

STATE	PROJECT DESIGNATION	YEAR	SHEET NO.	TOTAL SHEETS
ALASKA	PENDING/NFHWY00355	2020	H5	H5

Preliminary Plans

PAINTED TRAFFIC MARKINGS SUMMARY

DESCRIPTION	LENGTH (FT)	REMARKS
4" WHITE	117,800	
8" WHITE	525	SEE TURNOUT STRIPING DETAIL
4" DOUBLE YELLOW	25,050	
4" YELLOW	17,750	
4" YELLOW SKIP	33,850	

TRAFFIC MARKING NOTES:

1. IF NEW AND EXISTING LONGITUDINAL MARKINGS ARE NOT ALIGNED AT THE MATCH LINE, TRANSITION BETWEEN THE TWO USING A 100:1 TAPER.
2. THE STRIPE/SKIP RATIO FOR THIS PROJECT WILL BE 10 FT/30 FT. THE PASS/NO-PASS ZONES WILL BE DETERMINED IN THE FIELD BY THE CONTRACTOR ACCORDING TO SECTION 670. THIS WORK IS SUBSIDIARY TO PAY ITEM 670.0001.0000 PAINTED TRAFFIC MARKINGS.
3. PAVEMENT MARKINGS WILL BE PLACED IN ACCORDANCE WITH STANDARD PLANS T-20.04 AND T-21.03 AND SECTION 670.
4. LENGTH OF 4" DOUBLE YELLOW IS BASED ON A CONTINUOUS 4" DOUBLE YELLOW STRIPE THROUGH THE LENGTH OF THE PROJECT. NO ADJUSTMENT WILL BE MADE TO THE 670.0001.0000 PAY ITEM FOR DIFFERENCES IN QUANTITY OF YELLOW STRIPE INSTALLED ACCORDING TO 670-3.05, PRELIMINARY SPOTTING.

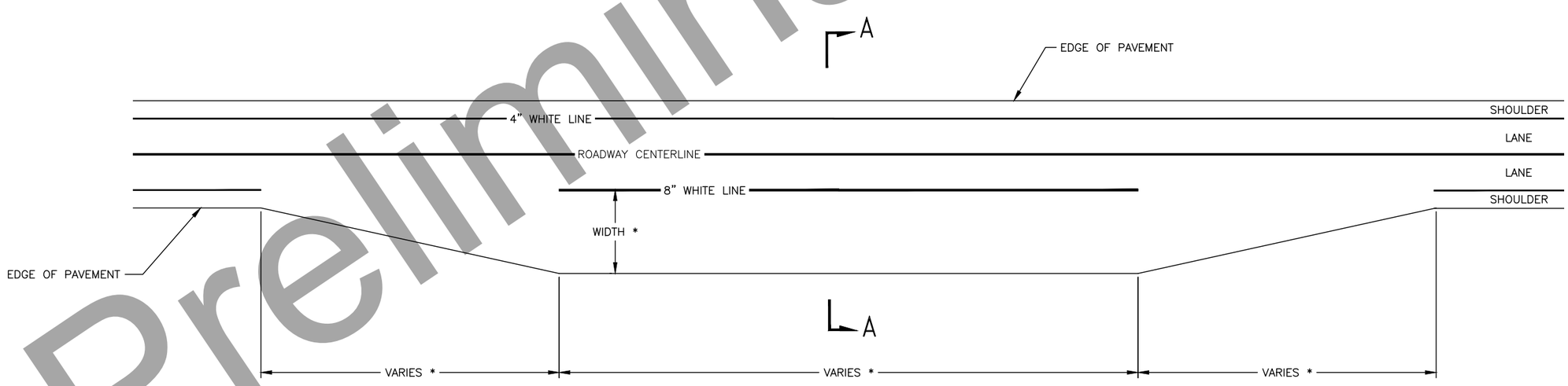

PARALLEL TURNOUT STRIPING DETAIL

* SEE PARALLEL TURNOUT SUMMARY

STRIPING SUMMARY & DETAILS

PLANS DEVELOPED BY: STATE OF ALASKA DEPARTMENT OF TRANSPORTATION & PUBLIC FACILITIES, NORTHERN REGION, 2301 PEGER ROAD, FAIRBANKS, AK 99709 (907)451-2200
C:\Users\Ubergstrom\Desktop\Home Work Hornw\Home Rich\03 Drafting\STRIPING SUMMARY & DETAILS-STRIPING SUMMARY & DETAILS Fri, Aug/07/20 11:51am

STATE	PROJECT DESIGNATION	YEAR	SHEET NO.	TOTAL SHEETS
ALASKA	NFHWY00355/	2020	N1	N2

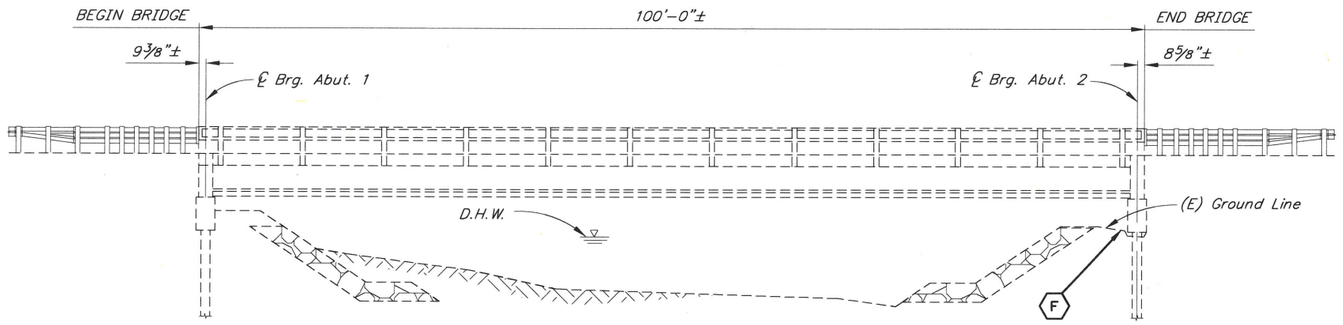

ELEVATION

12 0 4 8 12
In. Feet

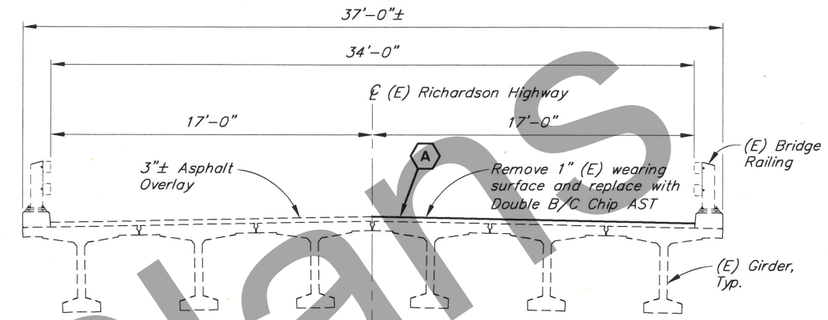

EXISTING PROPOSED

TYPICAL SECTION

12 0 4 8
In. Feet

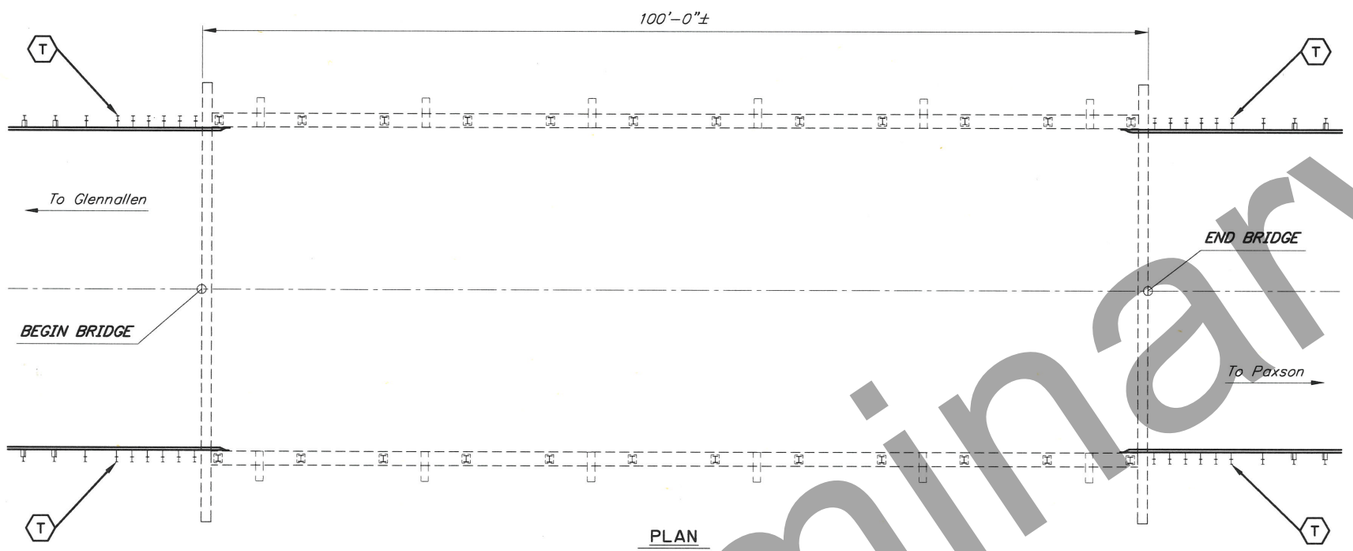

PLAN

12 0 4 8 12
In. Feet

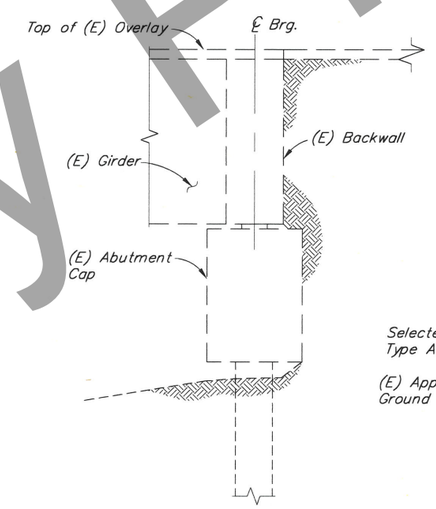

EXISTING TYPICAL SECTION

12 6 0 1 2 3 4
In. Feet

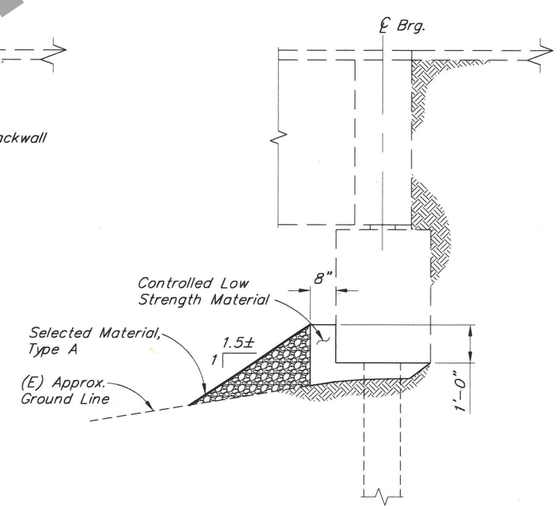

PROPOSED TYPICAL SECTION

12 6 0 1 2 3 4
In. Feet

ESTIMATE OF QUANTITIES

ITEM NO.	ITEM	PAY UNIT	ESTIMATING UNIT	SUBST.	SUPERST.	TOTAL QUANTITY
205.0005.0000	Controlled Low-Strength Material	CY	CY	4.2	---	4.2
606.0016.0000	Transition Rail	EA	EA	---	4	4

Item numbers are for reference only. Quantities shown are not necessarily the pay quantities nor the total quantity of the particular item.

LEGEND

- (T) – Replace Transition Rail
- (A) – Resurface Bridge Deck
- (F) – Fill Voids at Abutment 2

BRIDGE DRAWING INDEX

TITLE	DWG. NO.
GENERAL LAYOUT	1
TRANSITION RAIL	2

NOTES:

(E) = Existing
— — — = Existing
——— = Proposed

Bridge elevations are based on as-built drawings

For project stations and elevations, see Roadway Plans.

Verify controlling field dimensions before ordering or fabricating any material.

DESIGNED BY: Douglas Gelineau | CHECKED: Nick Murray | LAYOUT BY: Douglas Gelineau | CHECKED BY: Nick Murray | STATE OF ALASKA

SOURDOUGH CREEK BRIDGE

RICHARDSON HIGHWAY

GENERAL LAYOUT

BRIDGE NO. 575

DWG. NO. 1

Preliminary Plans

R:\cad\575\575rehab-General Layout Wed, Sep/02/20 9:06am

STATE	PROJECT DESIGNATION	YEAR	SHEET NO.	TOTAL SHEETS
ALASKA	NFHWY00355/	2020	N2	N2

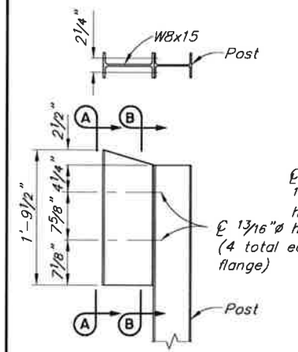

STEEL BLOCKOUT

See Note 2 for additional details.

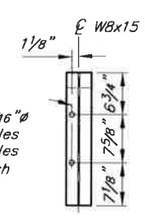

VIEW A-A

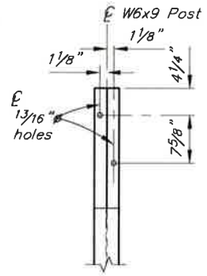

SECTION B-B

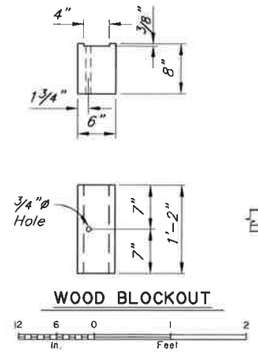

WOOD BLOCKOUT

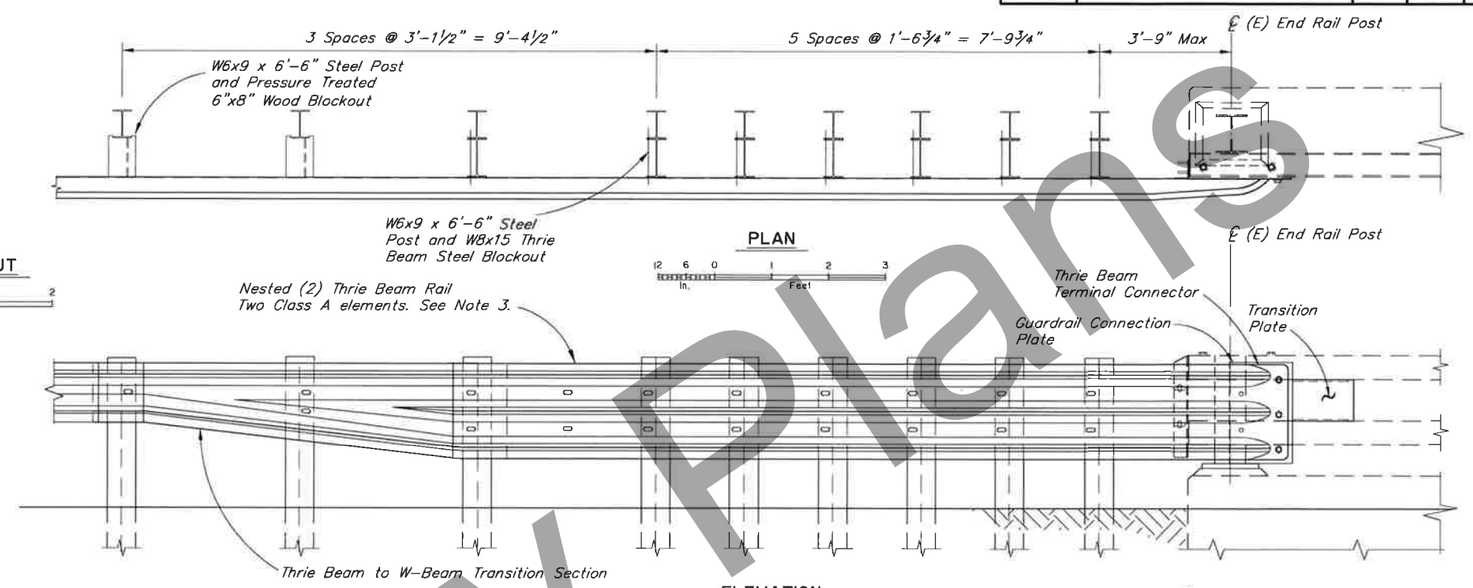

PLAN

ELEVATION

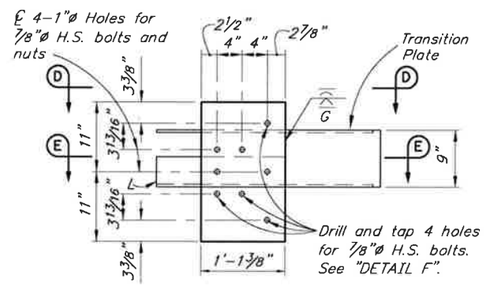

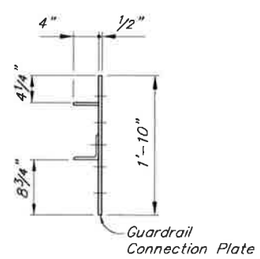

GUARDRAIL CONNECTION PLATE DETAILS

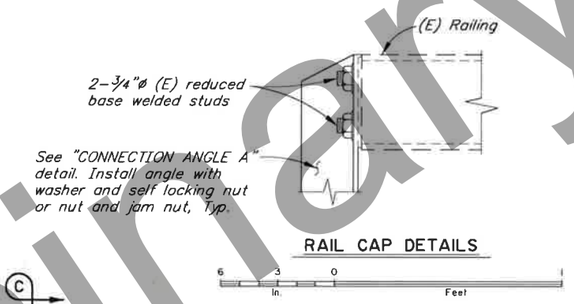

RAIL CAP DETAILS

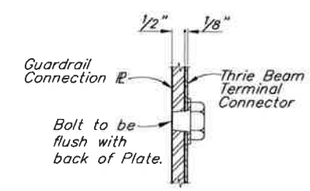

DETAIL F

No Scale

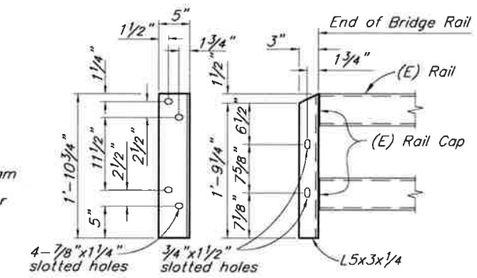

CONNECTION ANGLE A

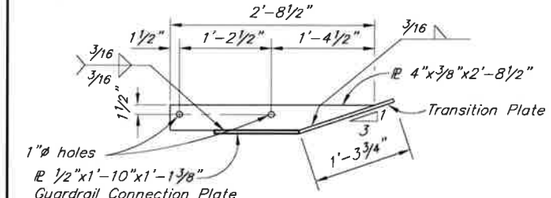

VIEW D-D

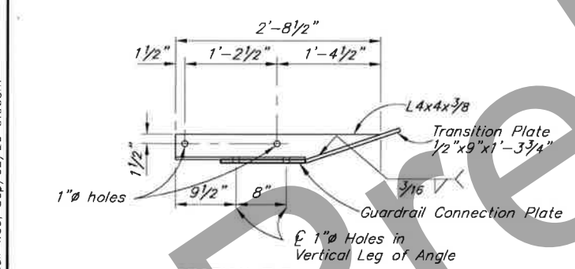

SECTION E-E

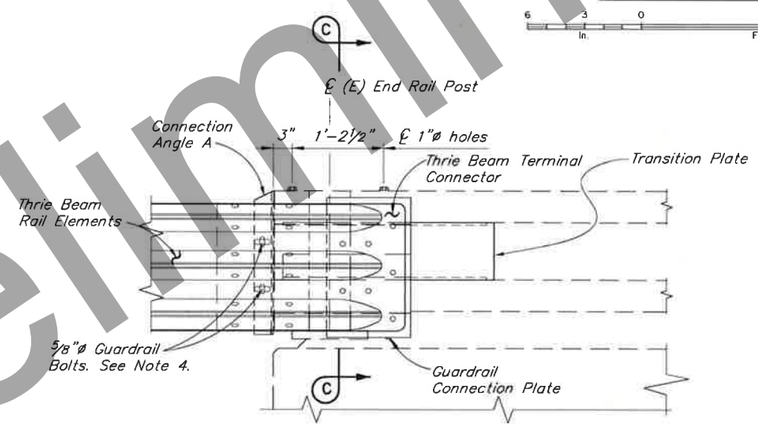

TRANSITION CONNECTION - ELEVATION

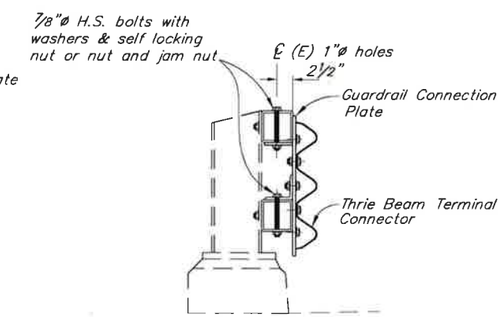

SECTION C-C

NOTES:

1. All guardrail and guardrail connection hardware to conform to AASHTO M 180. Use H.S. Bolts conforming to ASTM F3125 Grade A325. All other steel conforms to ASTM A709 Grade 36 or Grade 50.
2. Conform to G-00, and G-10 for all guardrail details not shown. No backup plate is required.
3. Lap approach guardrail to prevent snags from oncoming traffic.
4. Provide 4 1/2" horizontal slots in approach guardrail. Adjust guardrail bolts for sliding fit.

TRANSITION RAIL RETROFIT

DESIGNED BY: Douglas Gelineau | CHECKED: Nick Murray

STATE OF ALASKA

SOURDOUGH CREEK BRIDGE

RICHARDSON HIGHWAY

TRANSITION RAIL

BRIDGE NO. 575

DWG. NO. 2

Preliminary Plans

R:\cad\575\575rehab-Transition Rail Wed, Sep/02/20 9:06am

STATE	PROJECT DESIGNATION	YEAR	SHEET NO.	TOTAL SHEETS
ALASKA	PENDING/NFHWY00355	2020	Q1	Q12

ESCP GENERAL NOTES:

GENERAL:

1. READ AND COMPLY WITH THE CONSTRUCTION GENERAL PERMIT (CGP) AND SECTION 641 OF THE PROJECT SPECIFICATIONS.
2. INITIATE EROSION AND SEDIMENT CONTROLS PRIOR TO ANY EARTH DISTURBING ACTIVITIES.
3. ALL DISTURBED GROUND CAPABLE OF SUPPORTING VEGETATION SHALL BE RE-VEGETATED FOR FINAL STABILIZATION. FINAL STABILIZED AREAS NOT RE-VEGETATED SHALL BE 100% COVERED BY ROCK OR OTHER PERMANENT LOW-ERODIBLE MATERIAL. ATTAINMENT OF FINAL STABILIZATION SHALL BE AS APPROVED IN THE FIELD BY THE ENGINEER.
4. STOCKPILE AND STAGING LOCATIONS SHALL BE RECLAIMED TO THEIR ORIGINAL CONDITION AS APPROVED BY THE ENGINEER.
5. TEMPORARY BMP'S REQUIRED BY THIS ESCP WILL NOT BE MEASURED FOR PAYMENT AND ARE SUBSIDIARY TO PAY ITEM 641.0003.0000.
6. CONSTRUCTION ENTRANCE / EXITS MUST BE ESTABLISHED TO MINIMIZE OFF SITE IMPACTS.
7. NOTIFICATION TO PUBLIC WATER SYSTEM (PWS) OPERATORS IS REQUIRED WHEN POLLUTION, INCLUDING SITE EROSION RESULTS FROM A PROJECT AND OCCURS WITHIN THE SYSTEM DRINKING WATER PROTECTION AREA (DWPA).
8. IF EXCAVATION DEWATERING WILL OCCUR ON THE PROJECT, THE CONTRACTOR MUST COMPLY WITH THE EXCAVATION DEWATERING GENERAL PERMIT AKG0020000 AND SUBMIT A NOI AND A CERTIFIED BMP PLAN TO ADEC FOR APPROVAL BEFORE DEWATERING CAN BEGIN,
9. AVOID CLEARING FROM MAY 1 – JULY 15.

CULVERTS:

10. PROVIDE TEMPORARY INLET AND OUTLET PROTECTION FOR ALL CULVERTS (EXISTING AND PROPOSED) IN THE AREA OF DISTURBANCE PRIOR TO MAKING THEM OPERATIONAL OR BEGINNING EARTH DISTURBING ACTIVITIES.
11. PERMANENT CULVERT INLET AND OUTLET PROTECTION SHALL BE CULVERT RIPRAP APRONS. SEE THE CULVERT SUMMARY FOR RIPRAP CLASS. SEE SHEETS E1-E7 FOR CULVERT AND CULVERT RIPRAP APRON INSTALLATION DETAILS.

DITCH PROTECTION AND CONCENTRATED FLOWS:

12. DURING CONSTRUCTION, PROTECT DITCHES TO LIMIT RELEASE OF SEDIMENT. IF DITCH LINING PER THE PLANS IS NOT CONSTRUCTED SIMULTANEOUSLY WITH EMBANKMENT CONSTRUCTION, PROVIDE TEMPORARY DITCH PROTECTION IN THE FORM OF VELOCITY CONTROLS OR TEMPORARY NON-ERODIBLE LINING.
13. EXPOSED MATERIAL OF NEW DITCHES CAPABLE OF SUPPORTING VEGETATION SHALL BE SEEDED OR DITCH LINED PER THE PLANS FOR FINAL STABILIZATION.
14. WHEN POSSIBLE, AVOID CONDITIONS WHICH PROMOTE CONCENTRATED FLOWS. OTHERWISE, INSTALL VELOCITY CONTROL BMPS (I.E., WATTLE CHECK DAMS OR ROCK CHECK DAMS) OR NON-ERODIBLE CHANNEL LINING (I.E., DITCH LINING).

PERIMETER CONTROL:

15. VEGETATIVE BUFFER IS THE PREFERRED PERIMETER PROTECTION FOR THIS PROJECT. SEE APPENDIX A FOR COE PERMIT, FOR USING WETLANDS AS A VEGETATIVE BUFFER. IF THERE IS STANDING WATER OR EMERGENT WETLANDS IN THE 10 FT WORK AREA OR 25 FT VEGETATIVE BUFFER THEN CONTRACTOR NEEDS TO INSTALL PERIMETER CONTROL BMPS..

HAULING:

16. ENSURE LOADS ARE STABLE OR COVERED SO THAT NO MATERIAL ESCAPEMENT OCCURS DURING HAULING ACTIVITIES.

STOCKPILE PROTECTION:

17. ALL ERODIBLE STOCKPILES MUST BE PROTECTED BY EROSION AND SEDIMENT CONTROL DEVICES.
18. EROSION AND SEDIMENT CONTROL BMPS MAY HAVE TO BE REMOVED AND RE-INSTALLED EACH SHIFT.
19. COVER MUST BE USED ON STOCKPILES IN ACCORDANCE WITH SUBSECTION 641-3.01.5 TO PROVIDE ADDITIONAL EROSION PROTECTION.

IN WATER WORK

20. ALL IN WATER WORK WILL BE ISOLATED FROM FLOWING WATER.

TIMING OF BMP INSTALLATION:

21. INSTALL EROSION AND SEDIMENT CONTROL BMP'S PRIOR TO THE START OF CONSTRUCTION, AS NECESSARY TO MINIMIZE EROSION FROM DISTURBED SURFACES AND CAPTURE SEDIMENT ONSITE.
22. INSTALL TEMPORARY PERIMETER CONTROL BMP'S BEFORE ANY UP-GRADIENT SOIL DISTURBANCE OCCURS.
23. START PLACEMENT OF DITCH LINING OR OTHER DISSIPATION MEASURES WITHIN 24 HOURS OF PLACEMENT OF THE CULVERT AND COMPLETED IN ON CONTINUOUS OPERATION.

WINTER SHUTDOWN:

24. IF FINAL STABILIZATION IS NOT ACHIEVED BEFORE WINTER SHUTDOWN, EXPOSED GROUND, INCLUDING BUT NOT LIMITED TO EMBANKMENT SLOPES AND STOCKPILES, SHALL BE TEMPORARILY STABILIZED FOR SPRING BREAK-UP AND UNTIL PERMANENT STABILIZATION IS ACHIEVED THE NEXT SEASON. ALL STABILIZATION AND OTHER EROSION CONTROL MEASURES NECESSARY FOR WINTER SHUTDOWN ARE SUBSIDIARY TO PAY ITEM 641.0003.0000.

WETLANDS IN MATERIAL SITES:

25. AVOID IMPACTS OF WETLANDS WITHIN MATERIAL SITES MADE AVAILABLE WITHIN THESE PLANS. IF WETLANDS ARE UNAVOIDABLE, NOTIFY THE ENGINEER AT LEAST 60 DAYS PRIOR TO ANY EARTH DISTURBING ACTIVITY WITHIN THE MATERIAL SITES, AND IDENTIFY ALL POTENTIAL IMPACTS TO WETLANDS WITHIN THE SITE; IDENTIFY WHETHER THESE IMPACTS ARE TEMPORARY OR PERMANENT, AND PROVIDE DETAILED DRAWINGS DELINEATING THE PROPOSED IMPACT AREAS.
26. GRADE MATERIAL SITE FLOOR(S) TO RETAIN ALL WATER WITHIN EACH SITE AND TO AVOID ANY STORM WATER DISCHARGE FROM THE SITES DURING AND AFTER CONSTRUCTION.

THREATENED AND ENDANGERED SPECIES

ACCORDING TO THE LIST PUBLISHED AT:
HTTP://WWW.FAKR.NOAA.GOV/PROTECTEDRESOURCES/ESA/AK_SPECIESLST051110.PDF,
THERE ARE NO THREATENED AND ENDANGERED SPECIES LISTED FOR THIS AREA.

IF EAGLE NEST(S) ARE IDENTIFIED BY DOT&PF OR THE CONTRACTOR STAFF WITHIN 1/2 MILE OF THE CONSTRUCTION ACTIVITY, THE PROJECT ENGINEER SHALL BE INFORMED AND THE ENGINEER SHALL CONSULT THE USFWS FOR MEASURES TO PROTECT THE NEST FROM DISTURBANCES.

WILDLIFE & WATERFOWL REFUGES:

ALL PROJECT WORK WILL TAKE PLACE INSIDE THE EXISTING DOT&PF RIGHT-OF-WAY (ROW)' THE WRANGELL-ST. ELIAS NATIONAL PARK & PRESERVE IS LOCATED SOUTH OF THE PROJECT CORRIDOR. IT'S NORTHERN MOST BOUNDARY IS THE COPPER RIVER WHICH DOES NOT ABUT THE EXISTING DOT&PF RIGHT-OF-WAY. THE WRANGELL-ST. ELIAS NATIONAL PARK & PRESERVE IS A SECTION 4(f) PROTECTED RESOURCE AND NO IMPACTS WILL OCCUR.

PROJECT AREA	472.5 ACRES
DISTURBED AREA	181.5 ACRES
PRE-CONSTRUCTION IMPERVIOUS AREA	236,400 SY
POST-CONSTRUCTION IMPERVIOUS AREA	236,400 SY
PRE-CONSTRUCTION RUNOFF COEFFICIENT	0.7
POST-CONSTRUCTION RUNOFF COEFFICIENT	0.7

NOTE: PROJECT AREA AND DISTURBED AREA CALCULATIONS DO NOT INCLUDE MATERIALS SITES OR ACCESS ROADS TO THOSE SITES.

ENVIRONMENTAL INFORMATION

- RECEIVING WATER BODIES: GULKANA RIVER, SOURDOUGH CREEK, POPLAR GROVE CREEK AN ADJACENT WETLANDS.
- IMPAIRED WATER BODIES: NONE
- TOTAL MAXIMUM DAILY LOAD (TMDL) WATERS: NONE
- THREATENED AND ENDANGERED SPECIES: THIS PROJECT AND ITS SUPPORT AREAS DO NOT CONTAIN ANY KNOWN ESA SPECIES OR HABITAT.
- HISTORIC PLACES: NO HISTORIC PROPERTIES HAVE BEEN IDENTIFIED IN THE PROJECT AREA.
- MIGRATORY BIRD TREATY: ALL CONSTRUCTION ACTIVITIES SHALL COMPLY WITH THE MIGRATORY BIRD TREATY ACT TO PREVENT THE KILLING OR TAKING OF MIGRATORY BIRDS OR ANY PART, NEST, OR EGG OF ANY SUCH BIRDS.
- WETLANDS: SHOWN ON SUBSEQUENT Q SHEETS
- REFER TO APPENDIX A FOR PROJECT SPECIFIC PERMITS AND ENVIRONMENTAL COMMITMENTS

GENERAL SITE INFORMATION

- SITE FUNCTION: ROAD
- CLIMATE: AVERAGE ANNUAL TOTAL PRECIPITATION = 15.91 INCHES (SOURCE: WESTERN REGIONAL CLIMATE CENTER WEBSITE FOR SOURDOUGH 1N (508625), AK), 2-YEAR 24-HOUR PRECIPITATION = 1.08 INCHES (SOURCE: http://hdsc.nws.noaa.gov/hdsc/pfds/pfds_map_ak.html)
- MATERIAL SITES: (PENDING) OR M.S.71-3-015-5 (HOGAN HILL SOUTH QUARRY).
- STAGING AREAS: M.S.71-3-016-5

Preliminary Plans

PLANS DEVELOPED BY: STATE OF ALASKA DEPARTMENT OF TRANSPORTATION & PUBLIC FACILITIES, NORTHERN REGION, 2301 PEGER ROAD, FAIRBANKS, AK 99709 (907)451-2200
C:\Users\tjbergstrom\Desktop\Home Work Home\Home Rich\03 Drafting\Erosion Control-Q1 ESCP Wed, Aug/05/20 01:41pm

NO.	DATE	REVISION

STATE	PROJECT DESIGNATION	YEAR	SHEET NO.	TOTAL SHEETS
ALASKA	PENDING/NFHWY00355	2020	Q2	Q12

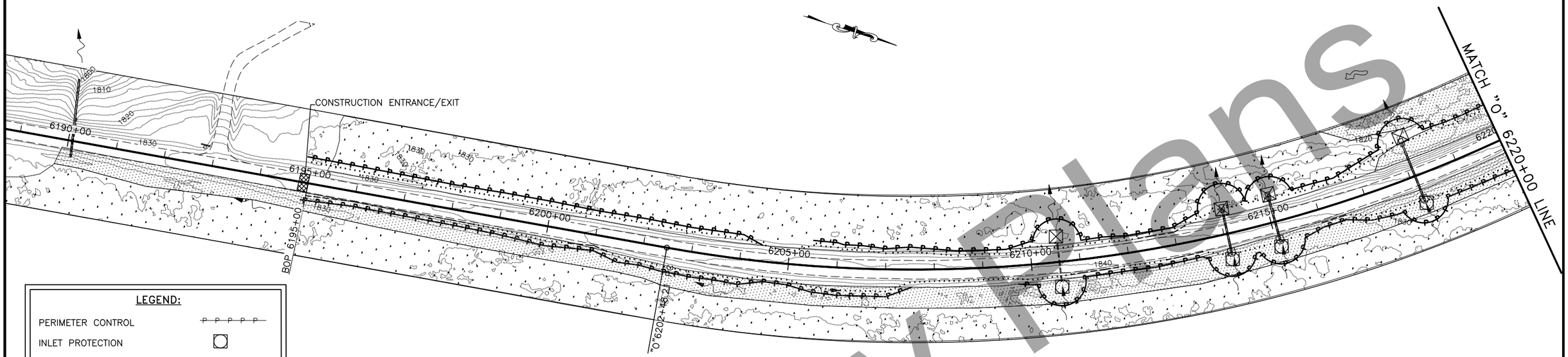

LEGEND:

- PERIMETER CONTROL
- INLET PROTECTION
- OUTLET PROTECTION
- FLOW LINE
- WETLANDS PREVIOUSLY DISTURBED
- WETLANDS

NOTES:

1. VELOCITY CONTROLS INCLUDE WATTLE CHECK DAMS OR ROCK CHECK DAMS OR OTHER METHOD AS APPROVED BY THE ENGINEER. VELOCITY CONTROLS ARE REQUIRED AT LOCATIONS OF HIGH VELOCITY FLOW.
2. INSTALL PERIMETER PROTECTION WHEN WORKING WITHIN 25 FEET OF SURFACE WATER. IF PERIMETER VEGETATIVE BUFFER WIDTH IS INSUFFICIENT, USE TEMPORARY DEVICES AND METHODS DESCRIBED BELOW.
3. ALL IN WATER WORK MUST BE ISOLATED FROM FLOWING WATER. ISOLATION METHODS INCLUDE:
   - SILT CURTAINS
   - COFFERDAMS
   - OTHER METHODS APPROVED BY THE ENGINEER
5. EXPECT TO ENCOUNTER PERMAFROST AND FROZEN SOILS DURING EXCAVATION ACTIVITIES. BMPs MUST BE IMPLEMENTED TO CONTAIN AND TREAT RUNOFF FROM THAWING OF EXPOSED PERMAFROST AND FROZEN SOILS.
6. EXPECT THE DISTRIBUTION OF FROZEN SOILS TO VARY.
7. EXPECT WATER TABLE ELEVATIONS TO FLUCTUATE IN RESPONSE TO CHANGING RIVER LEVELS AND PRECIPITATION.

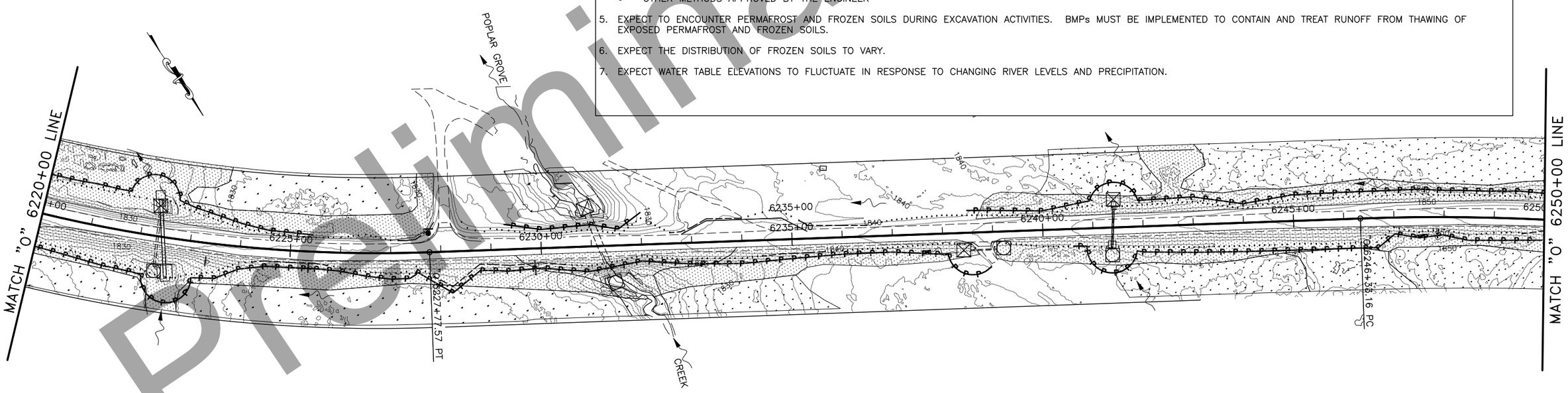

ESCP 6190+00–6250+00

Preliminary Plans

PLANS DEVELOPED BY: STATE OF ALASKA DEPARTMENT OF TRANSPORTATION & PUBLIC FACILITIES, NORTHERN REGION, 2301 PEGER ROAD, FAIRBANKS, AK 99709 (907)451-2200
C:\Users\jbergstrom\Desktop\Home Work Home\Home Rich\01 Plots\90265_ESCP_02-Q11-ESCP 6190+00-6250+00 Wed, Aug/05/20 01:45pm

NO.	DATE	REVISION

STATE	PROJECT DESIGNATION	YEAR	SHEET NO.	TOTAL SHEETS
ALASKA	PENDING/NFHWY00355	2020	Q3	Q12

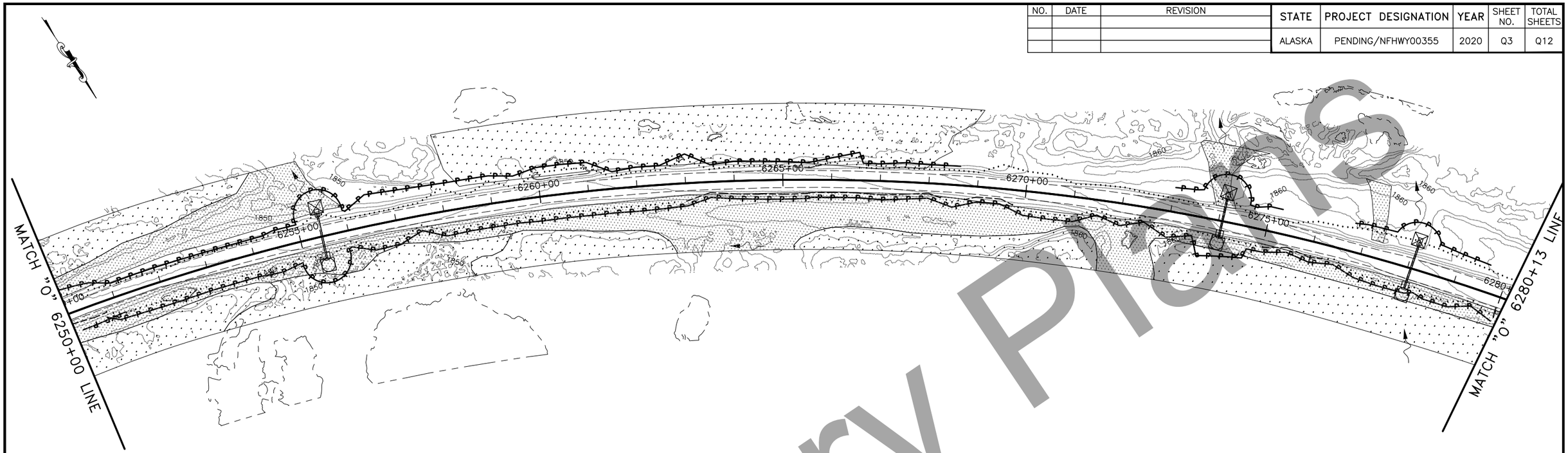

ESCP 6250+00–6310+00

Preliminary Plans

PLANS DEVELOPED BY: STATE OF ALASKA DEPARTMENT OF TRANSPORTATION & PUBLIC FACILITIES, NORTHERN REGION, 2301 PEGER ROAD, FAIRBANKS, AK 99709 (907)451-2200
C:\Users\jbergstrom\Desktop\Home Work Homw\Home Rich\01 Plans\90265_ESCP_Q2-Q11-ESCP 6250+00-6310+00 Wed, Aug/05/20 01:52pm

NO.	DATE	REVISION

STATE	PROJECT DESIGNATION	YEAR	SHEET NO.	TOTAL SHEETS
ALASKA	PENDING/NFHWY00355	2020	Q4	Q12

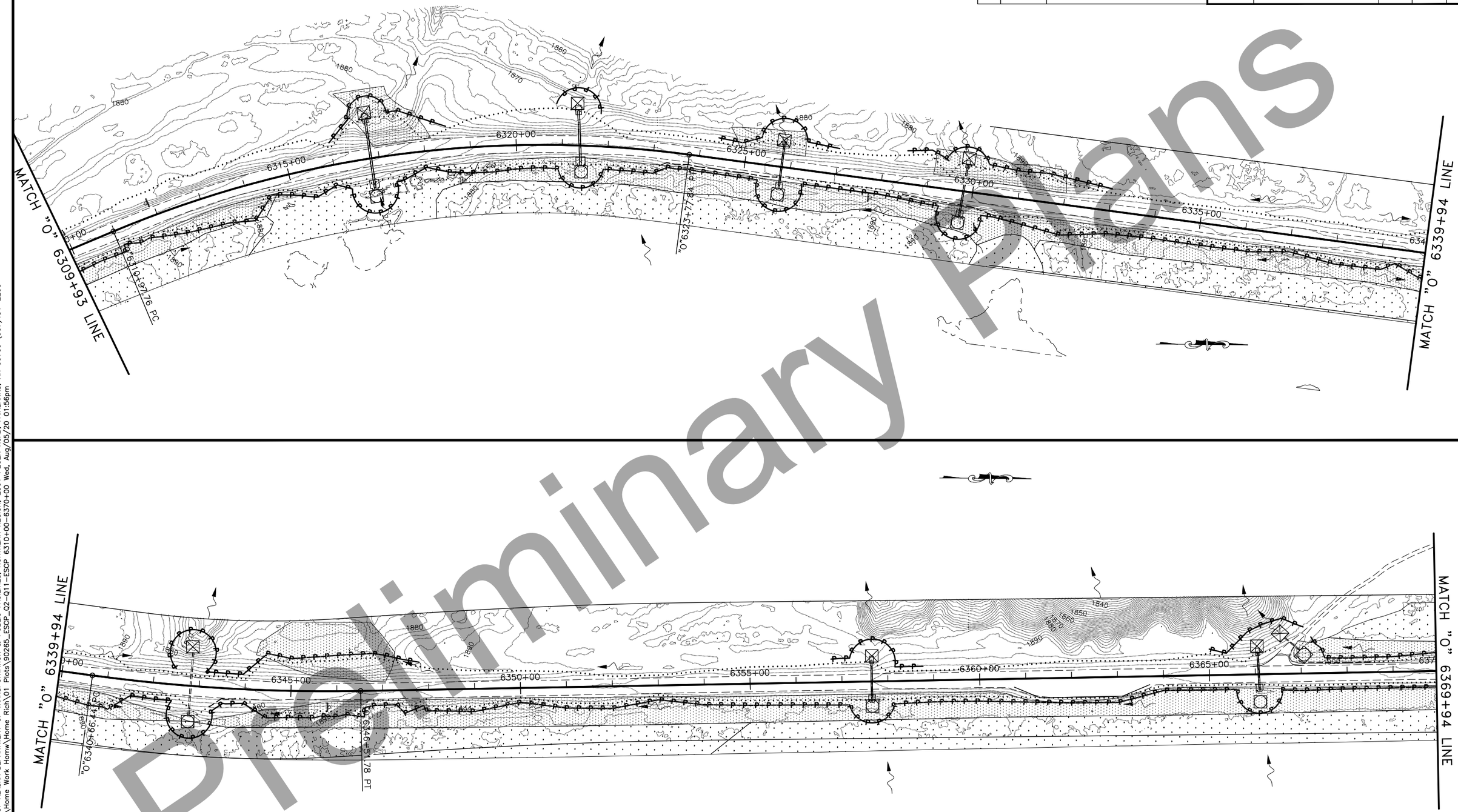

ESCP 6310+00–6370+00

Preliminary Plans

PLANS DEVELOPED BY: STATE OF ALASKA DEPARTMENT OF TRANSPORTATION & PUBLIC FACILITIES, NORTHERN REGION, 2301 PEGER ROAD, FAIRBANKS, AK 99709 (907)451-2200
C:\Users\Ubergstrom\Desktop\Home Work Homw\Home Rich\01 Plots\90265_ESCP_Q2-Q11-ESCP 6310+00-6370+00 Wed, Aug/05/20 01:56pm

NO.	DATE	REVISION

STATE	PROJECT DESIGNATION	YEAR	SHEET NO.	TOTAL SHEETS
ALASKA	PENDING/NFHWY00355	2020	Q5	Q12

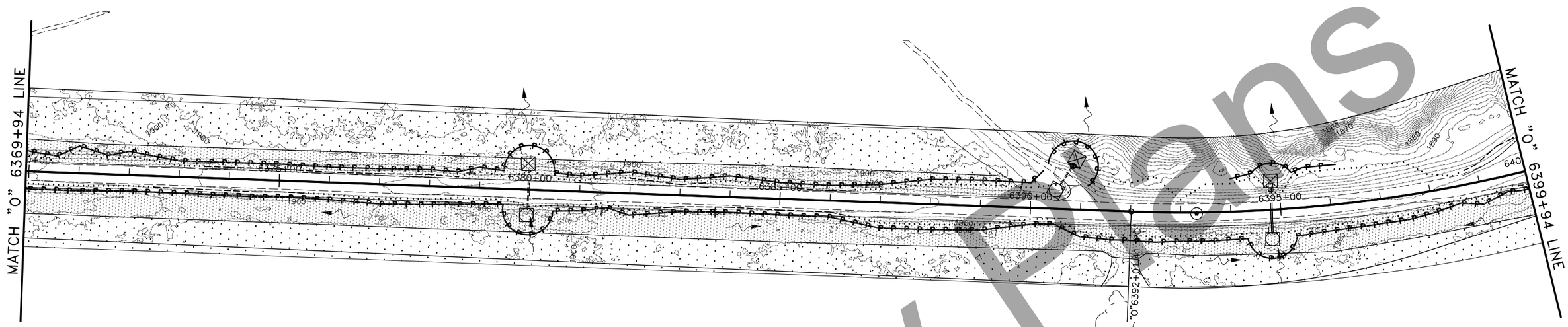

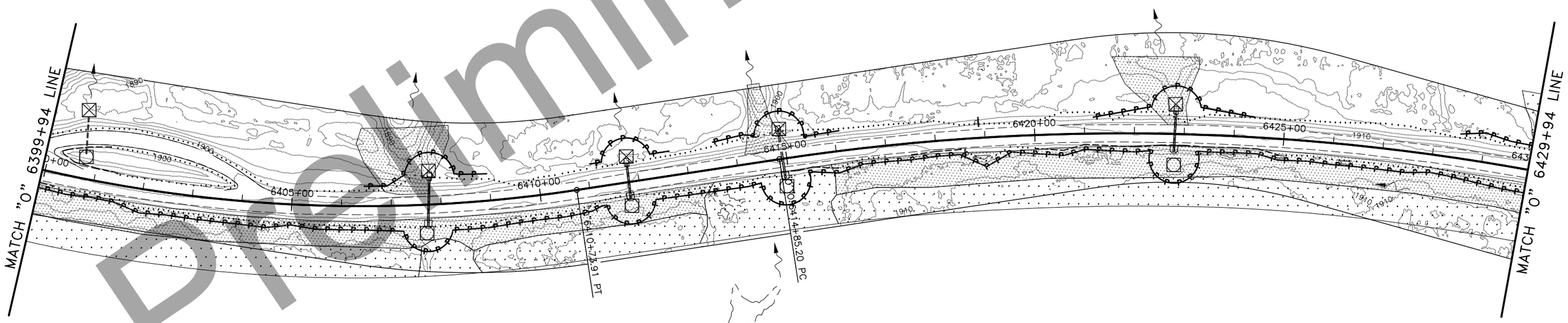

ESCP 6370+00–6430+00

Preliminary Plans

PLANS DEVELOPED BY: STATE OF ALASKA DEPARTMENT OF TRANSPORTATION & PUBLIC FACILITIES, NORTHERN REGION, 2301 PEGER ROAD, FAIRBANKS, AK 99709 (907)451-2200
C:\Users\Ubergstrom\Desktop\Home Work Homw\Home Rich\01 Plots\90265_ESCP_Q2-Q11-ESCP 6370+00-6430+00 Wed, Aug/05/20 01:59pm

NO.	DATE	REVISION

STATE	PROJECT DESIGNATION	YEAR	SHEET NO.	TOTAL SHEETS
ALASKA	PENDING/NFHWY00355	2020	Q6	Q12

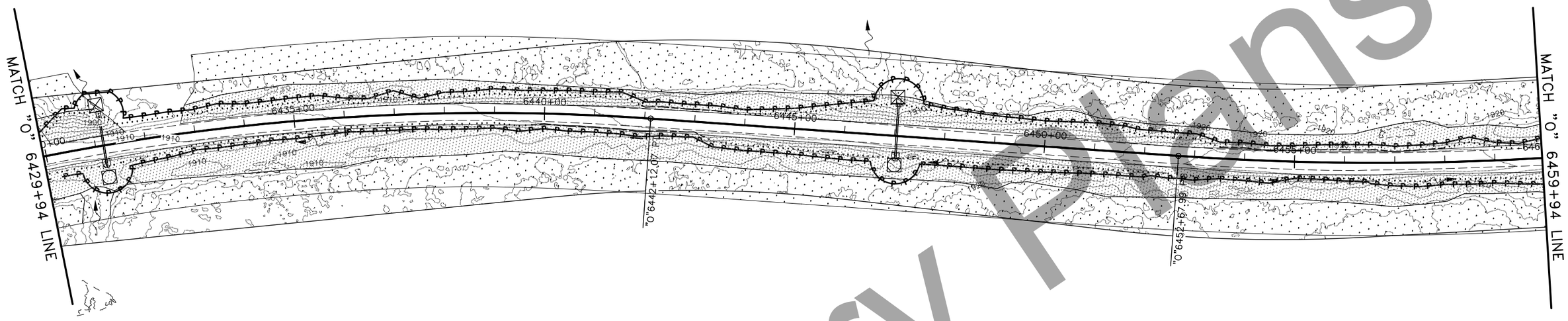

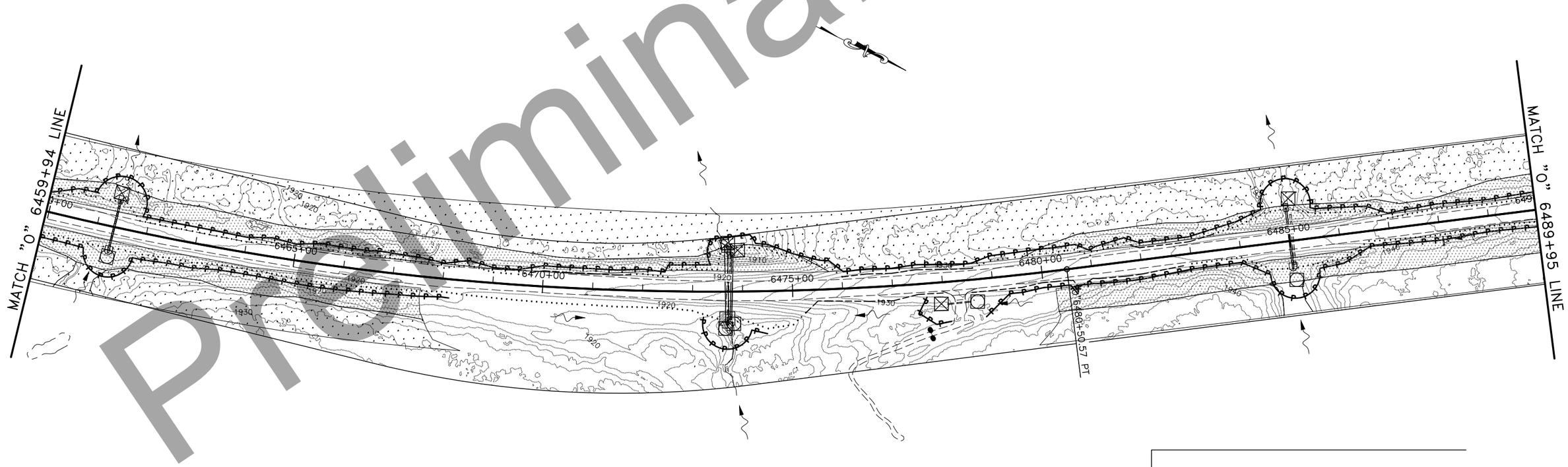

ESCP 6430+00–6490+00

Preliminary Plans

PLANS DEVELOPED BY: STATE OF ALASKA DEPARTMENT OF TRANSPORTATION & PUBLIC FACILITIES, NORTHERN REGION, 2301 PEGER ROAD, FAIRBANKS, AK 99709 (907)451-2200
C:\Users\jbergstrom\Desktop\Home Work Home\Home Rich\01 Plots\90265_ESCP_Q2-Q11-ESCP 6430+00-6490+00 Wed, Aug/05/20 02:03pm

NO.	DATE	REVISION

STATE	PROJECT DESIGNATION	YEAR	SHEET NO.	TOTAL SHEETS
ALASKA	PENDING/NFHWY00355	2020	Q7	Q12

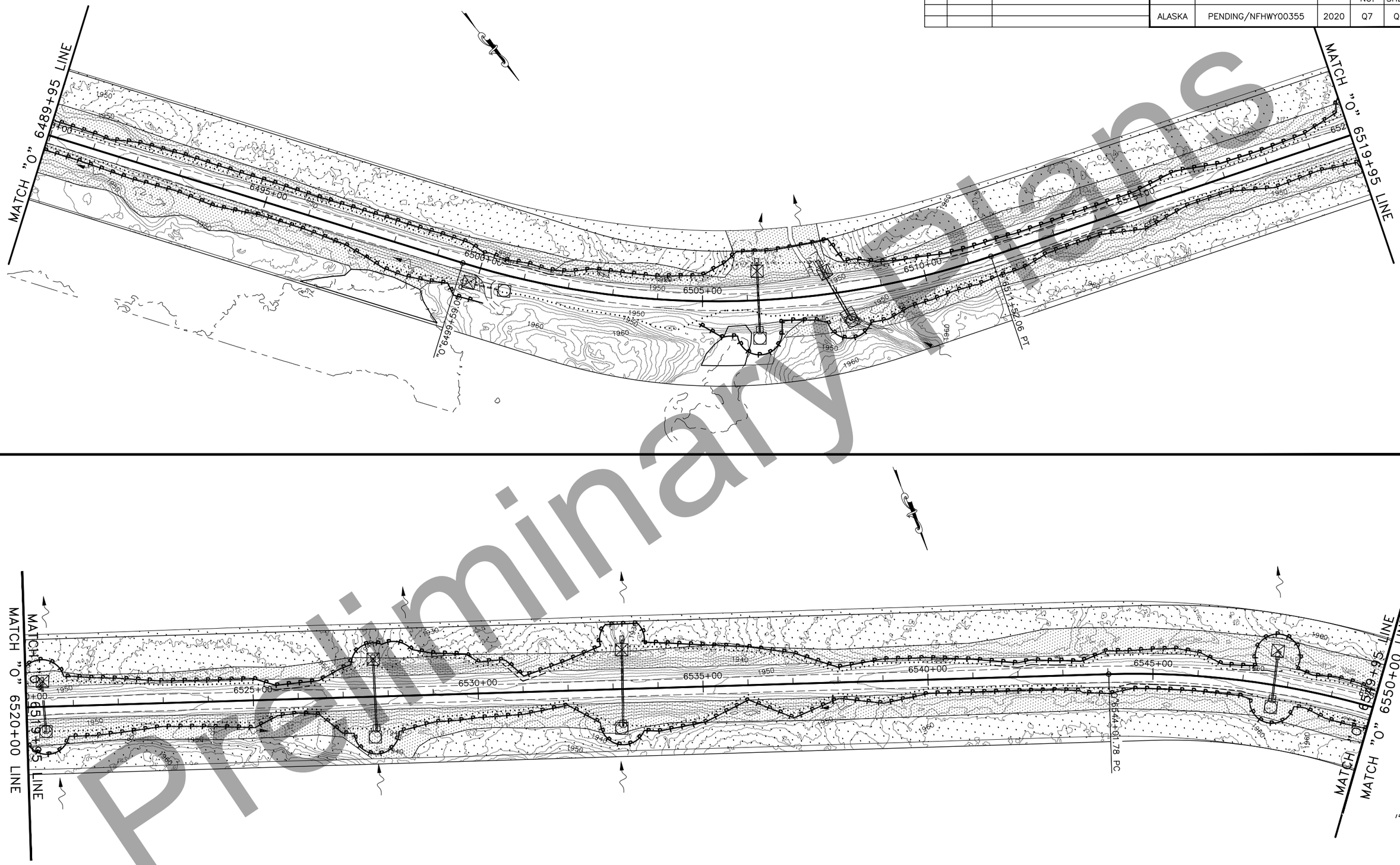

Preliminary Plans

ESCP 6490+00–6550+00

PLANS DEVELOPED BY: STATE OF ALASKA DEPARTMENT OF TRANSPORTATION & PUBLIC FACILITIES, NORTHERN REGION, 2301 PEGER ROAD, FAIRBANKS, AK 99709 (907)451-2200
C:\Users\Ubergstrom\Desktop\Home Work Homw\Home Rich\01 Plots\90265_ESCP_02-Q11-ESCP 6490+00-6550+00 Wed, Aug/05/20 02:07pm

NO.	DATE	REVISION

STATE	PROJECT DESIGNATION	YEAR	SHEET NO.	TOTAL SHEETS
ALASKA	PENDING/NFHWY00355	2020	Q8	Q12

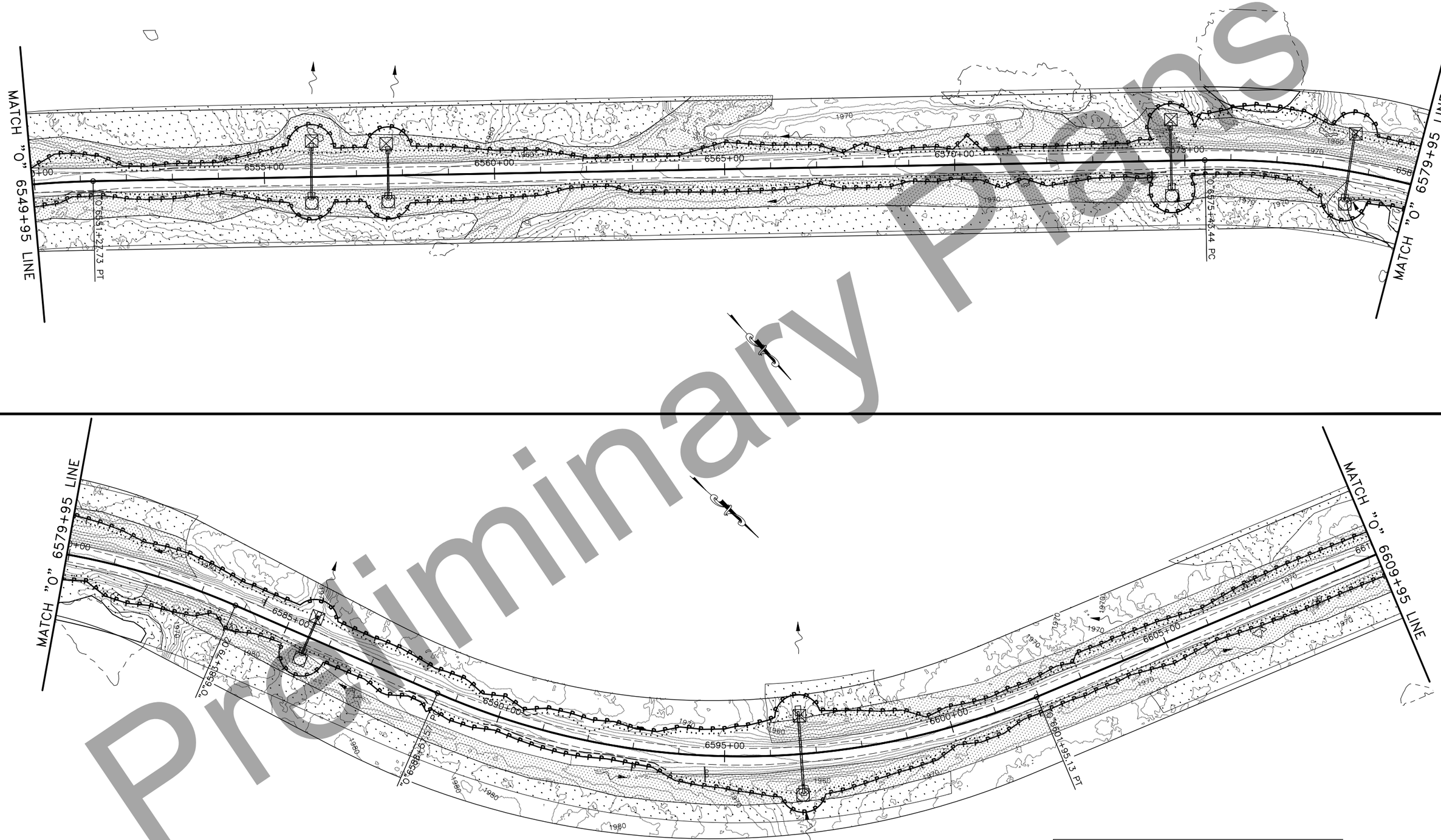

Preliminary Plans

ESCP 6550+00–6610+00

PLANS DEVELOPED BY: STATE OF ALASKA DEPARTMENT OF TRANSPORTATION & PUBLIC FACILITIES, NORTHERN REGION, 2301 PEGER ROAD, FAIRBANKS, AK 99709 (907)451-2200
C:\Users\Ubergstrom\Desktop\Home Work Homw\Home Rich\01 Plots\90265_ESCP_Q2-Q11-ESCP 6550+00-6610+00 Wed, Aug/05/20 02:11pm

NO.	DATE	REVISION

STATE	PROJECT DESIGNATION	YEAR	SHEET NO.	TOTAL SHEETS
ALASKA	PENDING/NFHWY00355	2020	Q9	Q12

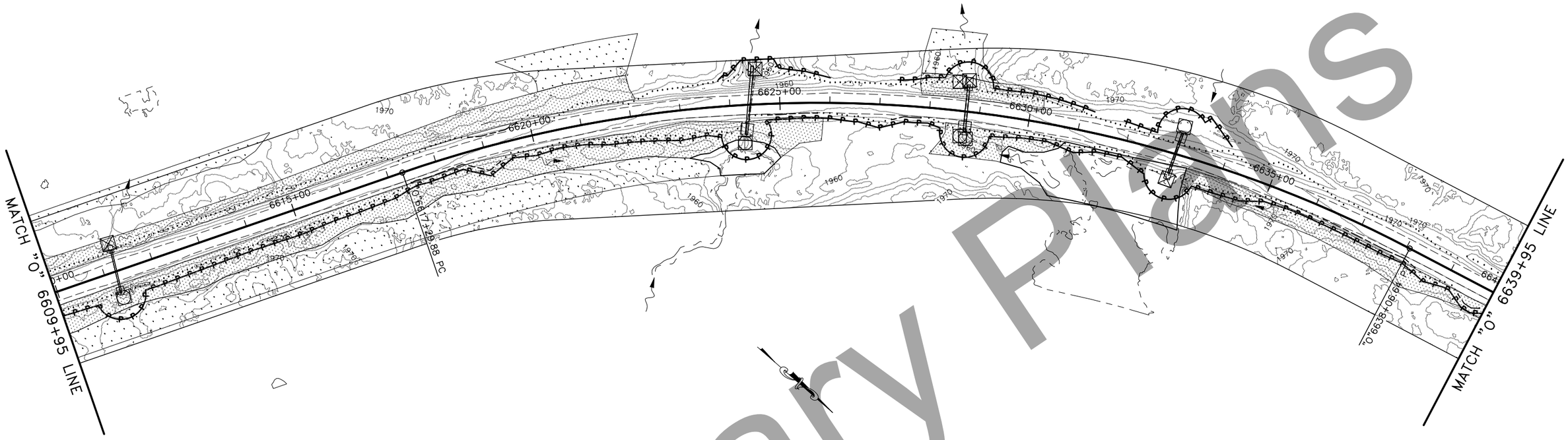

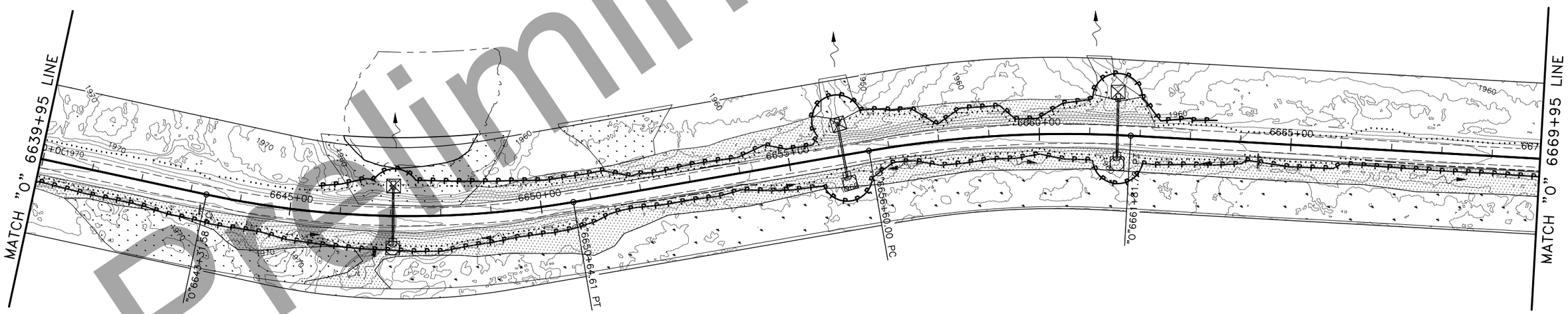

ESCP 6610+00–6670+00

Preliminary Plans

PLANS DEVELOPED BY: STATE OF ALASKA DEPARTMENT OF TRANSPORTATION & PUBLIC FACILITIES, NORTHERN REGION, 2301 PEGER ROAD, FAIRBANKS, AK 99709 (907)451-2200
C:\Users\Ubergstrom\Desktop\Home Work Home\Home Rich\01 Plots\90265_ESCP_Q2-Q11-ESCP 6610+00-6670+00 Wed, Aug/05/20 02:15pm

NO.	DATE	REVISION

STATE	PROJECT DESIGNATION	YEAR	SHEET NO.	TOTAL SHEETS
ALASKA	PENDING/NFHWY00355	2020	Q10	Q12

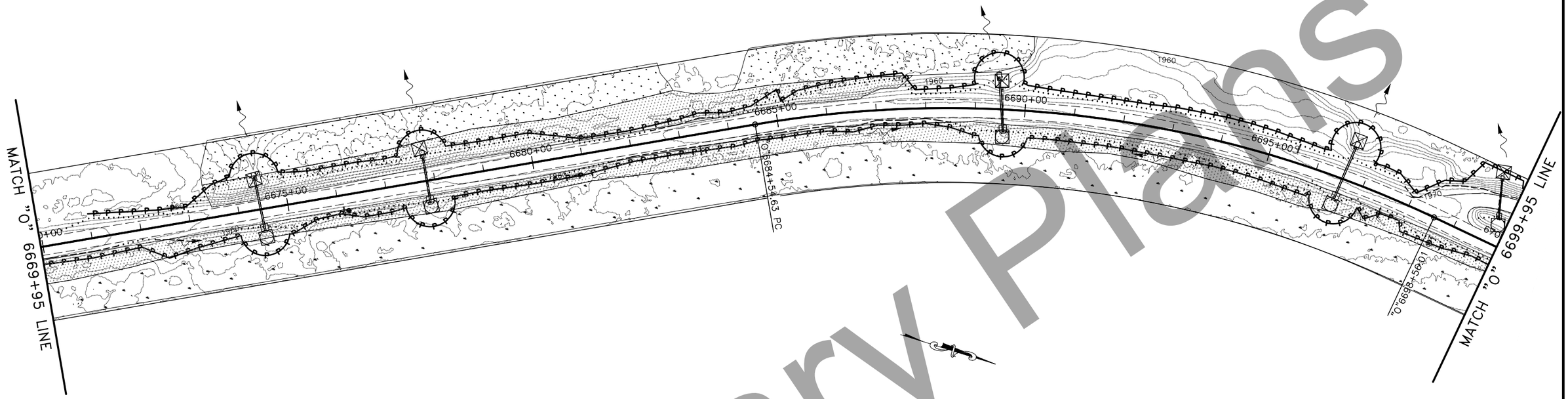

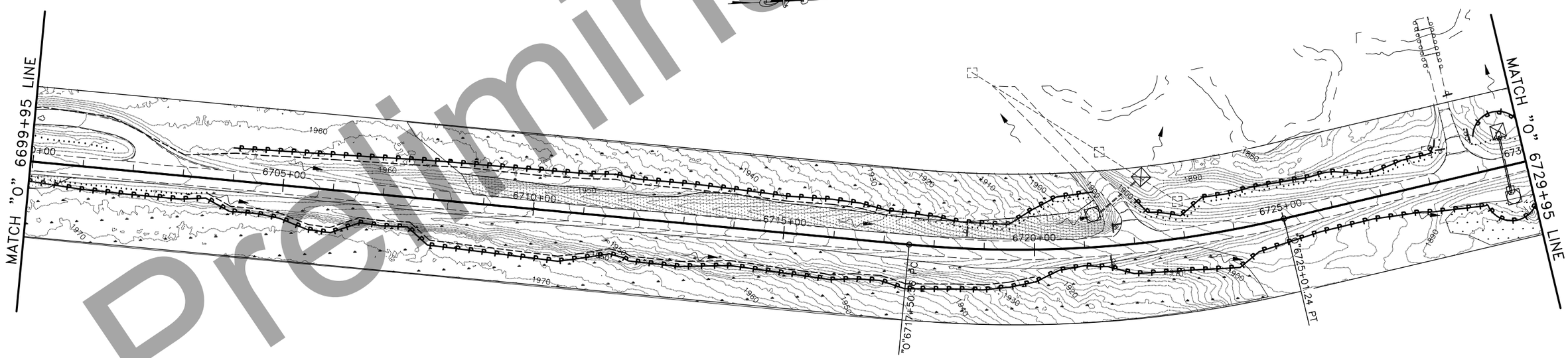

ESCP 6670+00–6730+00

Preliminary Plans

PLANS DEVELOPED BY: STATE OF ALASKA DEPARTMENT OF TRANSPORTATION & PUBLIC FACILITIES, NORTHERN REGION, 2301 PEGER ROAD, FAIRBANKS, AK 99709 (907)451-2200
C:\Users\Ubergstrom\Desktop\Home Work Home\Home Rich\01 Plots\90265_ESCP_Q2-Q11-ESCP 6670+00-6730+00 Wed, Aug/05/20 02:15pm

NO.	DATE	REVISION

STATE	PROJECT DESIGNATION	YEAR	SHEET NO.	TOTAL SHEETS
ALASKA	PENDING/NFHWY00355	2020	Q11	Q12

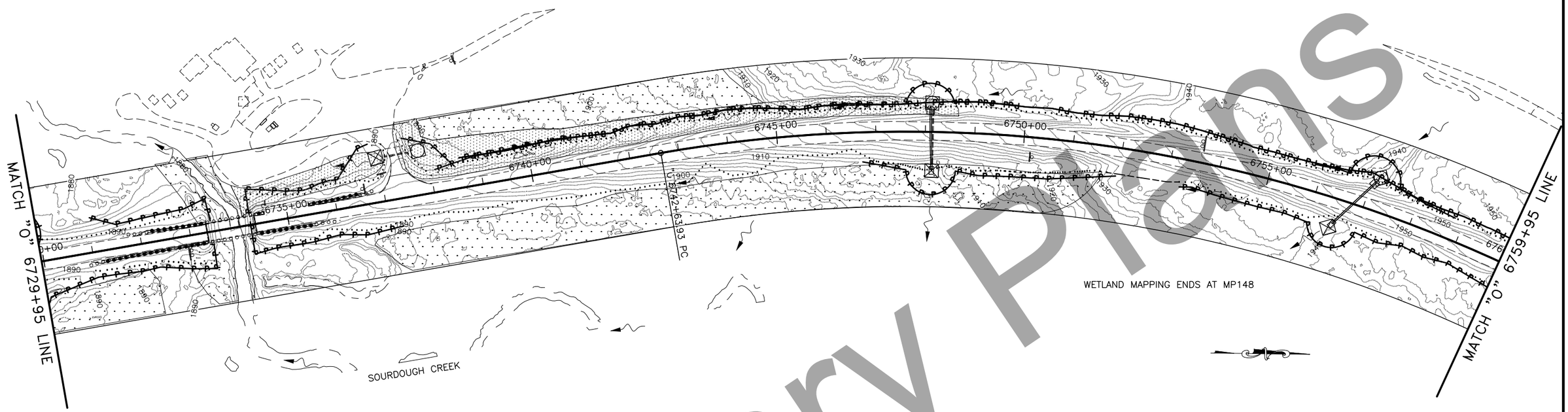

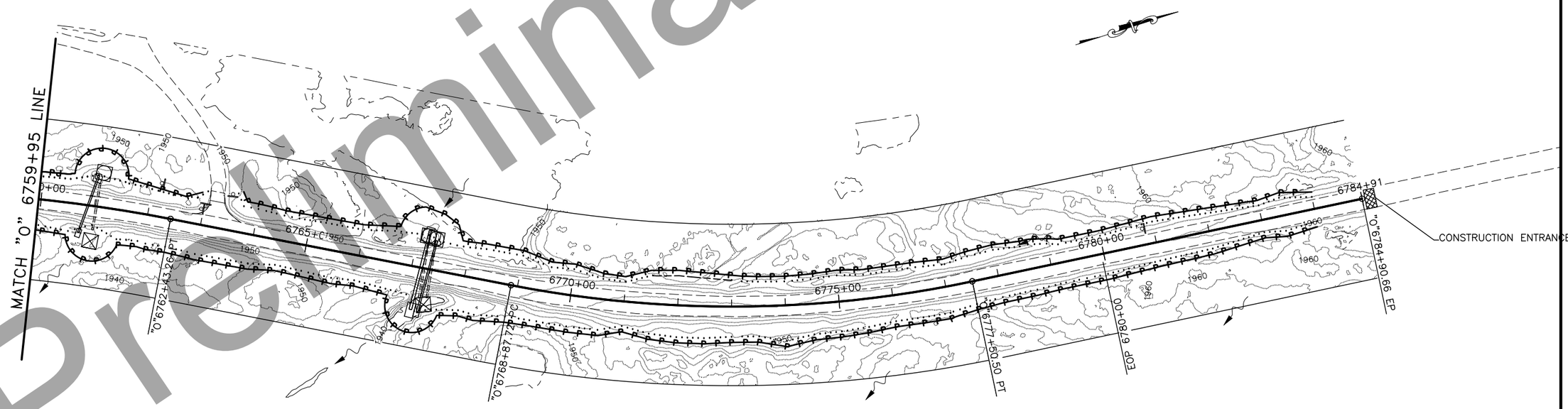

ESCP 6730+00–6790+00

Preliminary Plans

PLANS DEVELOPED BY: STATE OF ALASKA DEPARTMENT OF TRANSPORTATION & PUBLIC FACILITIES, NORTHERN REGION, 2301 PEGER ROAD, FAIRBANKS, AK 99709 (907)451-2200
C:\Users\jbergstrom\Desktop\Home Work Homw\Home Rich\01 Plots\90265_ESCP_Q2-Q11-ESCP 6730+00-6790+00 Wed, Aug/05/20 02:22pm

NO.	DATE	REVISION

STATE	PROJECT DESIGNATION	YEAR	SHEET NO.	TOTAL SHEETS
ALASKA	----	2018	Q12	Q12

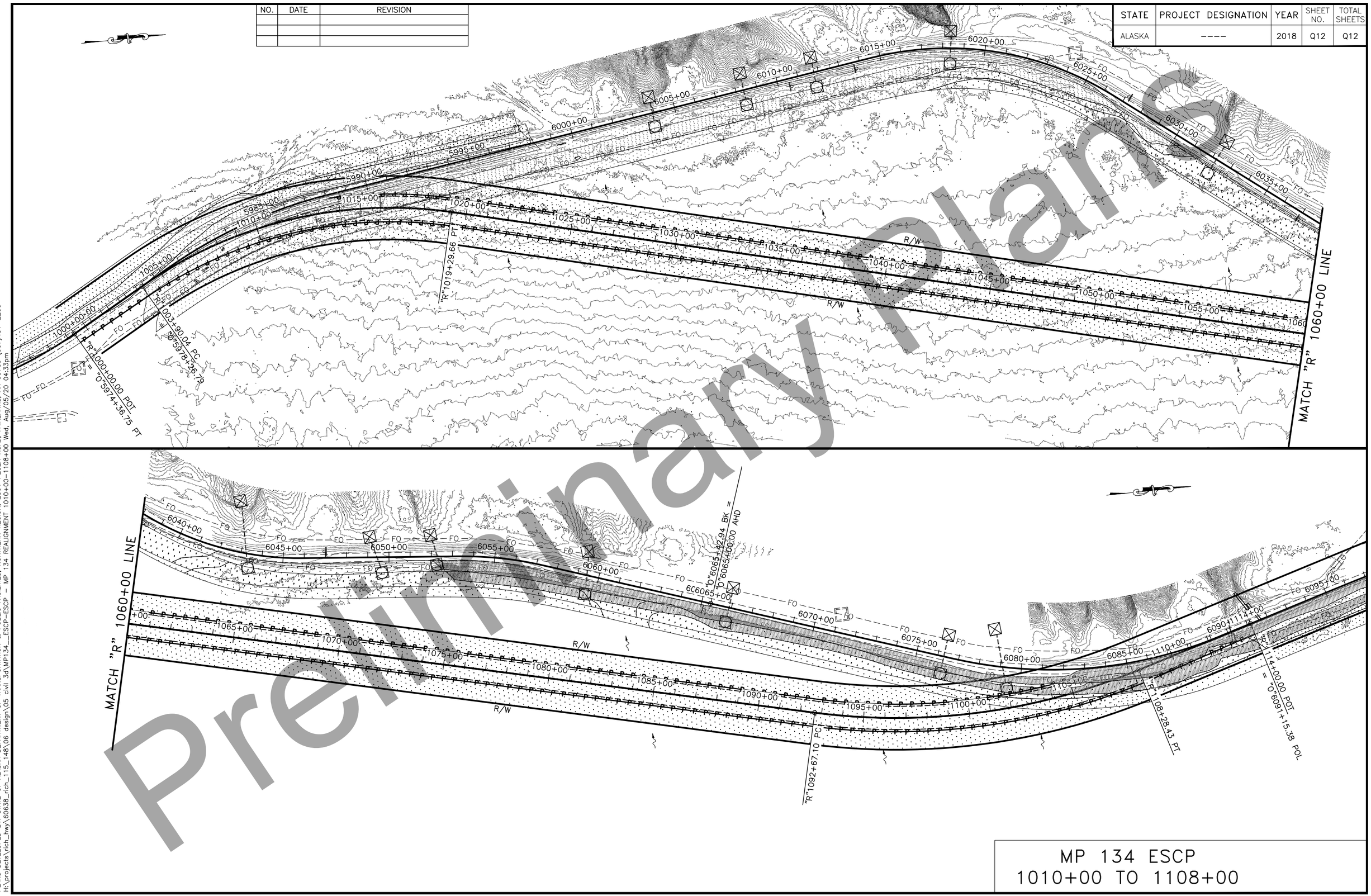

Preliminary Plans

MP 134 ESCP
1010+00 TO 1108+00

PLANS DEVELOPED BY: STATE OF ALASKA DEPARTMENT OF TRANSPORTATION & PUBLIC FACILITIES, NORTHERN REGION, 2301 PEGER ROAD, FAIRBANKS, AK 99709 (907)451-2200
H:\projects\rich_hwy\60638_rich_115_148\06 design\05 civil 3d\MP134_ESCP-ESCP - MP 134 REALIGNMENT 1010+00-1108+00 Wed, Aug/05/20 04:33pm

NO.	DATE	REVISION

STATE	PROJECT DESIGNATION	YEAR	SHEET NO.	TOTAL SHEETS
ALASKA	PENDING/NFHWY00355	2020	T1	T1

VERTICAL DROP-OFFS

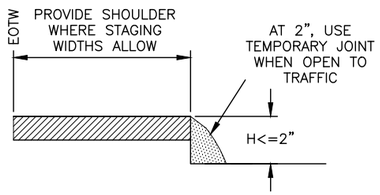

CASE A

DROP-OFFS ≤2 INCHES
(PAVED SURFACES ONLY)

1. USE "UNEVEN LANES" (CW8-11) SIGNS FOR ALL DROP-OFFS IN BETWEEN TRAFFIC LANES.
2. LEAVE NO DROP-OFFS > 1.5" IN THE TRAFFIC LANE OR ACTIVE WHEEL TRACK.

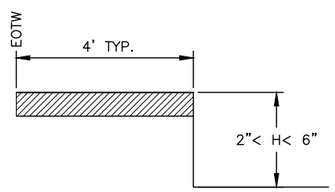

CASE B

2"< DROP-OFFS < 6"
(ALL ROADWAY SURFACES)

1. PLACE CONES OR CANDLES FOR DROP-OFFS ≥ 4 FEET AND ≤ 30 FEET FROM THE EOTW.
2. USE DRUMS OR TYPE II BARRICADES FOR DROP-OFFS < 4 FEET FROM THE EOTW.

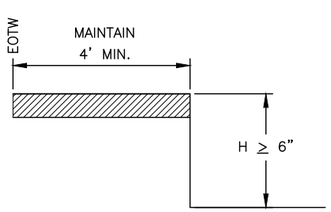

CASE C

DROP-OFFS ≥6"
(ALL ROADWAY SURFACES AND ROADSIDE SLOPES)

1. PLACE DRUMS OR TYPE II BARRICADES FOR DROP-OFFS ≤ 24" WITHIN THE CLEAR AREA.
2. PROVIDE PORTABLE CONCRETE BARRIER FOR DROP-OFFS >24" WITHIN 15 FEET OF THE EOTW. USE DRUMS OR TYPE II BARRICADES IF BEYOND 15 FEET.

FILL SLOPES

STEEPER THAN OR EQUAL TO 3:1 | BETWEEN 4:1 AND 3:1 | FLATTER THAN OR EQUAL TO 4:1

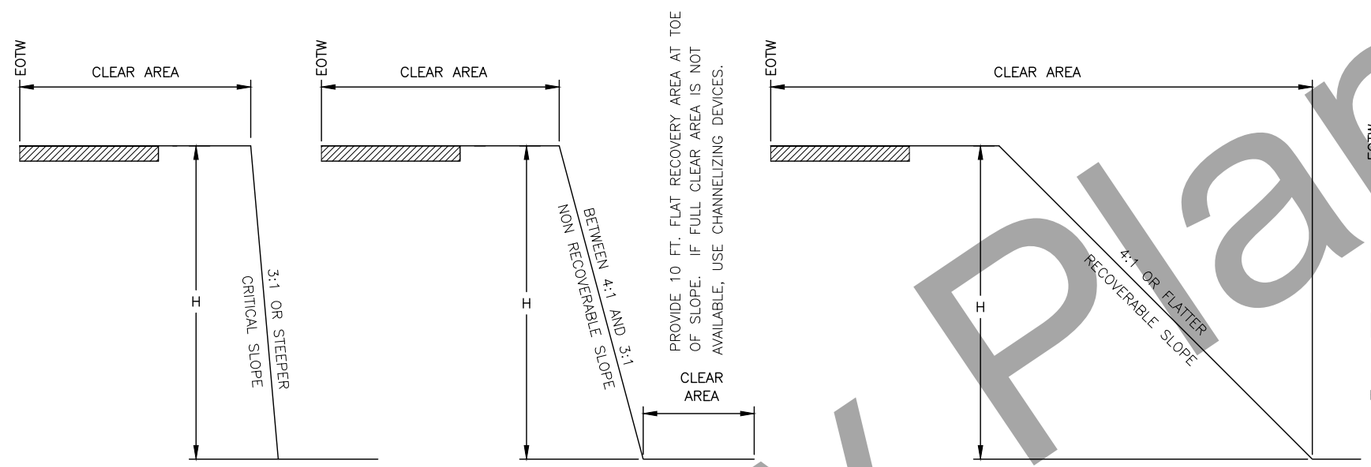

CUT SLOPES

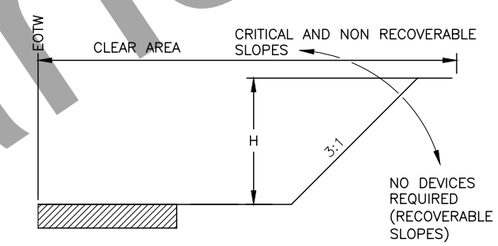

EOTW = EDGE OF TRAVELED WAY

CLEAR AREA REQUIREMENTS

	LOW SPEED < = 35 MPH	INTERMEDIATE SPEED 40 MPH TO 45 MPH	HIGH SPEED ≥ = 50 MPH
RURAL	15'	24'	30'
URBAN	10' DITCH SECTIONS, OR 2' BEHIND CURB	15' DITCH CONDITIONS, OR 2' BEHIND CURB	15' DITCH CONDITIONS, OR 2' BEHIND CURB

CHANNELIZING DEVICE REQUIREMENTS FOR SLOPES 3:1 OR STEEPER WITHIN THE CLEAR AREA

	H <= 15'	H > 15'
< 2000 VPD LOW VOLUME	CANDLES OR CONES	TYPE II BARRICADES OR DRUMS
> 2000 VPD	TYPE II BARRICADE OR DRUMS	PORTABLE CONCRETE BARRIER OR TEMPORARY GUARDRAIL

TRAFFIC CONTROL NOTES:

1. USE THE EXISTING CROSS-SECTION (PRIOR TO CONSTRUCTION) AS A BASIS FOR DETERMINING WHEN CHANNELIZING DEVICES ARE NEEDED.
2. INSTALL CHANNELIZING DEVICES WHEN THE HORIZONTAL OR VERTICAL CURVATURE IS MADE MORE SEVERE.
3. INSTALL FLEXIBLE DELINEATORS WHEN ALL VEGETATION OVER 4 FEET HIGH IS CLEARED FROM FILL SLOPES THAT ARE 3:1 OR STEEPER IN THE CLEAR AREA.
4. USE PORTABLE CONCRETE BARRIER FOR WARRANTING CONDITIONS WHICH LAST LONGER THAN 3 DAYS. FOR CONDITIONS LASTING LESS THAN 3 DAYS, OTHER CHANNELIZING DEVICES MAY BE INSTALLED.
5. TERMINATE RUNS OF PORTABLE CONCRETE BARRIER USING THE FOLLOWING METHODS:
   - A) CONNECT TO A PORTABLE CRASH CUSHION, OR
   - B) PROVIDE A CONCRETE BARRIER WITH THRIE BEAM TRANSITION TO W-BEAM GUARDRAIL, TREATED WITH A PARALLEL TERMINAL (SEE SECTION 710).
   - C) FLARE THE ENDS OF THE PORTABLE CONCRETE BARRIER AWAY FROM THE ROADWAY AT A RATE OF 7:1 ON A COMPACTED SLOPE OF 6:1 OR FLATTER, OUTSIDE OF THE CLEAR AREA. INSTALL A SLOPING PORTABLE CONCRETE BARRIER END TREATMENT, OR
   - D) BURY IN THE BACKSLOPE.
6. TERMINATE THE RUNS OF TEMPORARY W-BEAM GUARDRAIL USING THE FOLLOWING METHODS:
   - A) PROVIDE A PARALLEL TERMINAL (SEE SECTION 710)
   - B) FLARE THE ENDS OF THE TEMPORARY GUARDRAIL AWAY FROM THE ROADWAY AT A RATE OF 6:1 ON A COMPACTED SLOPE OF 6:1 OR FLATTER OUTSIDE OF THE CLEAR AREA, TERMINATE WITH A STANDARD W-BEAM END SECTION, OR
   - C) BURY IN THE BACKSLOPE.

EQUIPMENT NOTES:

1. WHEN THERE IS ACTIVE, NONMOBILE CONSTRUCTION EQUIPMENT WITHIN THE CLEAR AREA, DELINEATE THE ROADSIDE WITH TRAFFIC CONES.
2. SEPARATE PROCEDURES ARE REQUIRED FOR MOBILE WORK ZONE OPERATIONS AND SHORT DURATION WORK OF LESS THAN 12 HOURS.

WINTER SHUTDOWN NOTES:

1. WHEN REQUIRED, USE CHANNELIZING DEVICES WHICH CAN BE MAINTAINED OVER WINTER.
2. NO CHANNELIZING DEVICES ARE REQUIRED IF:
   - A) CONSTRUCTION SLOPES ARE RECOVERABLE, AND
   - B) SLOPES ARE SMOOTH AND COMPACTED, AND
   - C) REQUIRED CLEAR AREA IS PROVIDED

Preliminary Plans

TRAFFIC CONTROL

PLANS DEVELOPED BY: STATE OF ALASKA DEPARTMENT OF TRANSPORTATION & PUBLIC FACILITIES, NORTHERN REGION, 2301 PEGER ROAD, FAIRBANKS, AK 99709 (907)451-2200
C:\Users\jbergstrom\Desktop\Home Work Homw\Home Rich\03 Drafting\90265_T1-TRAFFIC CONTROL Wed, Aug/05/20 02:23pm

NO.	DATE	REVISION

STATE	PROJECT DESIGNATION	YEAR	SHEET NO.	TOTAL SHEETS
ALASKA	PENDING/NFHWY00355	2020	T2	T2

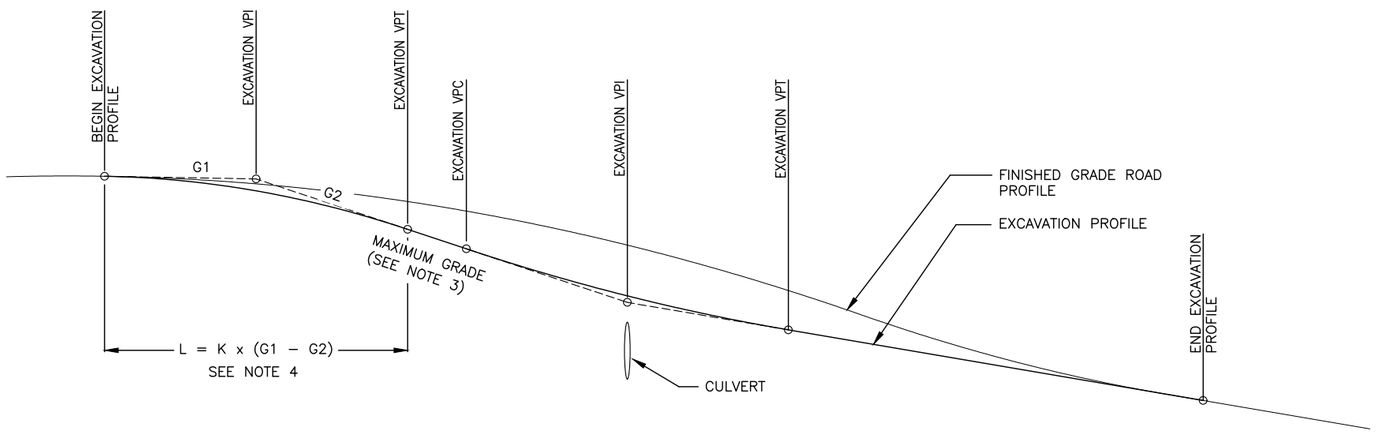

CULVERT EXCAVATION PROFILE

CULVERT EXCAVATION NOTES:

1. THE CONTRACTOR IS RESPONSIBLE FOR DEVELOPING AND SUBMITTING THE EXCAVATION PROFILE AND HORIZONTAL ALIGNMENT TO THE ENGINEER FOR APPROVAL PRIOR TO BEGINNING CULVERT EXCAVATION WORK.
2. HORIZONTAL AND VERTICAL GEOMETRY MAY BE ADJUSTED IN THE FIELD BY THE ENGINEER TO ADJUST FOR EXISTING CONDITIONS
3. THE MAXIMUM ALLOWABLE VERTICAL GRADE IS 8%
4. DETERMINE THE MINIMUM ALLOWABLE LENGTH OF VERTICAL CURVE (L) BY MULTIPLYING THE ALGEBRAIC DIFFERENCE IN GRADES (G1–G2) BY THE APPLICABLE RATE OF VERTICAL CURVATURE RATE (K) GIVEN BELOW:
   - 4.1. FOR CREST VERTICAL CURVES K = 19
   - 4.2. FOR SAG VERTICAL CURVES K = 37
5. MAINTAIN 2 FEET OR GREATER OF COVER OVER THE TOP OF CULVERTS
6. OBTAIN THE ENGINEER'S APPROVAL ON ALL TRAFFIC CONTROL PLANS PRIOR TO EXCAVATING FOR NEW CULVERTS
7. ALL WORK AND RESOURCES REQUIRED TO DEVELOP EXCAVATION PROFILES AND HORIZONTAL ALIGNMENTS ARE SUBSIDIARY TO SERIES 602 AND 603 SERIES PAY ITEMS

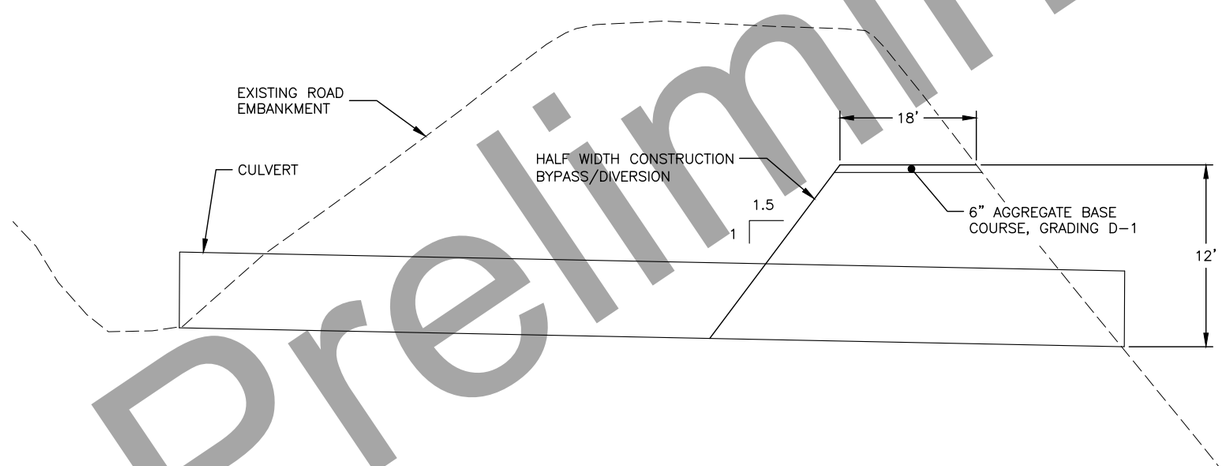

CONSTRUCTION CULVERT REPLACEMENT

TYPICAL SECTION: HALF WIDTH

Preliminary Plans

TRAFFIC CONTROL
CULVERT EXCAVATION

PLANS DEVELOPED BY: STATE OF ALASKA DEPARTMENT OF TRANSPORTATION & PUBLIC FACILITIES, NORTHERN REGION, 2301 PEGER ROAD, FAIRBANKS, AK 99709 (907)451-2200
H:\projects\rich_hwy\60638_rich_115_148\06 design\05 civil 3d\03_90265 137-148\03 Drafting\MSCL-Details-TRAFFIC CONTROL CULVERT EXCAVATION Thu, Oct/08/20 10:16am

NO.	DATE	REVISION

STATE	PROJECT DESIGNATION	YEAR	SHEET NO.	TOTAL SHEETS
ALASKA	PENDING/NFHWY00355	2020	V1	V16

G-00.05 SHEET 1 of 5

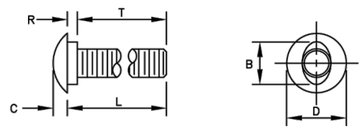

B	C	D	L (Length)	R	T (Thread Length)
15/16"	5/16"	1 5/16" or 1 7/16"	As Required	7/32"	As Required

5/8" BUTTONHEAD BOLT
(FBB01–05)

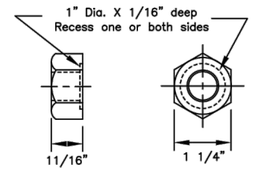

5/8" Dia. RECESSED HEX NUT
(FBB01–05)

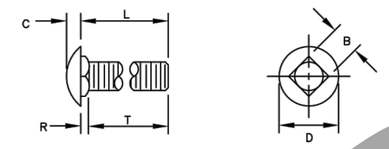

B	C	D	L (Length)	R	T (Thread Length)
5/8"	5/16"	1 5/16"	As Required	3/16"	As Required

5/8" Dia. CARRIAGE BOLT
(FBC10–20)

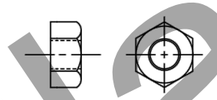

STANDARD HEX NUT

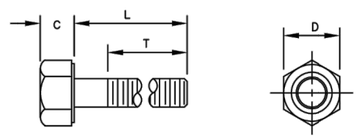

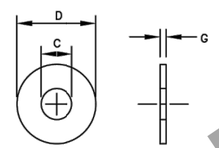

Bolt Size	C	D	L (Length)	T (Thread Length)
5/16"	——	——	1 1/2"	7/8"
5/16"	——	——	1"	1"
3/8"	——	——	7 1/2"	1 1/2"
1/2"	——	——	1 1/2"	1 1/2"
1/2"	——	——	1 1/4"	1 1/4"
5/8" H.S.	5/16"	7/8"	8"	1 1/2"
5/8"–11	——	——	1 1/2"	1 1/2"
3/4"	——	——	1 1/2"	1 1/2"
3/4"	——	——	As Required	2"
3/4" H.S.	15/32"	1 1/4"	2"	1 1/2"

STANDARD HEX BOLTS

For Bolt ø	C	D	G
3/8"	7/16"	1"	5/64"
1/2"	17/32"	1 1/16"	3/32"
1/2" H.S.	17/32"	1 1/16"	3/32"
5/8"	11/16"	1 3/4"	9/64"
3/4"	13/16"	1 15/32"	9/64"
3/4" H.S.	13/16"	2"	5/32"
1"	1 1/16"	2"	9/64"

STANDARD STEEL WASHERS

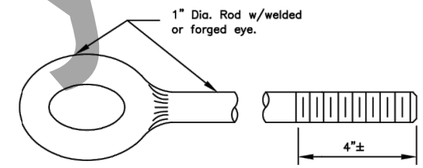

EYE BOLT

GENERAL NOTES:

1. All covered hardware shall comply with the Task Force 13 (TF13) Guide to Standardized Roadside Safety Hardware online publication. Designators given when possible in parentheses.

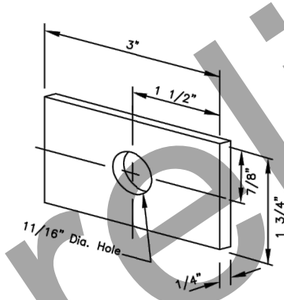

FLAT PLATE WASHER

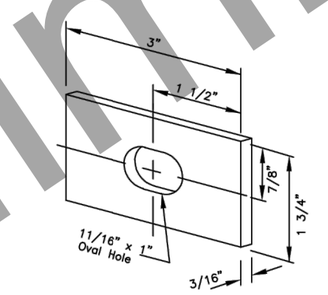

RECTANGULAR POST BOLT WASHER
(FWR03)

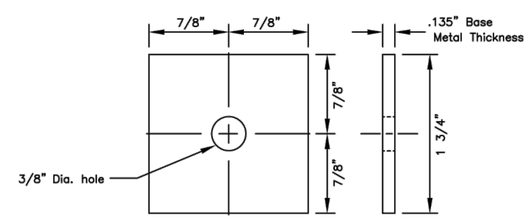

SQUARE STEEL WASHER
(FWR01)

State of Alaska DOT&PF
ALASKA STANDARD PLAN

STANDARD GUARDRAIL HARDWARE (NUTS, BOLTS & WASHERS)

Adopted as an Alaska Standard Plan by: Carolyn Morehouse
Carolyn Morehouse, P.E.
Chief Engineer

Adoption Date: 7/17/2020

Last Code and Stds. Review
By: KLK Date: 7/8/2020

Next Code and Standards Review Date: 7/8/2030

G-00.05

Preliminary Plans

PLANS DEVELOPED BY: STATE OF ALASKA DEPARTMENT OF TRANSPORTATION & PUBLIC FACILITIES, NORTHERN REGION, 2301 PEGER ROAD, FAIRBANKS, AK 99709 (907)451-2200
C:\Users\Ubergstrom\Desktop\Home Work Hornw\Home Rich\03 Drafting\Std V dwgs\G 00.05-STANDARD PLAN G-00.05 1 OF 5 Fri, Aug/07/20 02:50pm

STANDARD PLAN G-00.05
1 OF 5

NO.	DATE	REVISION

STATE	PROJECT DESIGNATION	YEAR	SHEET NO.	TOTAL SHEETS
ALASKA	PENDING/NFHWY00355	2020	V2	V16

G-00.05 SHEET 2 of 5

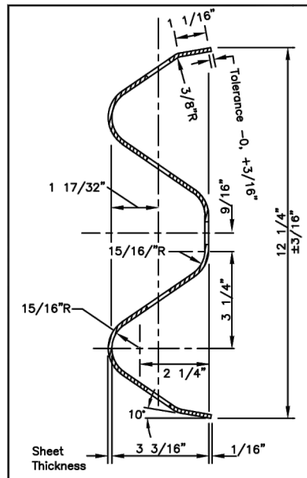

SECTION A–A
(cross section same as RWM02a–b)

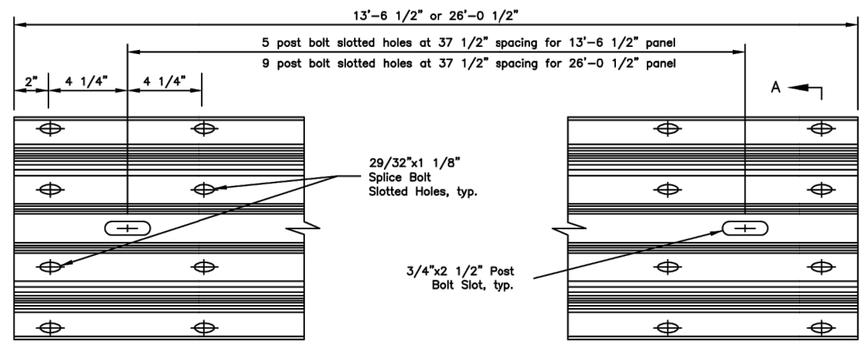

STANDARD W–BEAM PANEL (RWM04a–b)

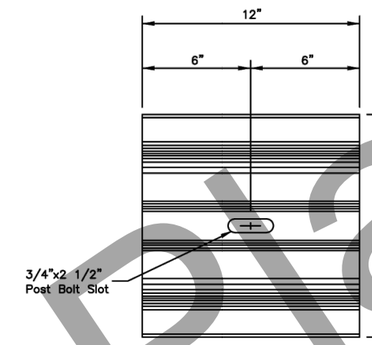

W–BEAM BACKUP PLATE
(RWB01a–b)

GENERAL NOTES:

1. All covered hardware shall comply with the Task Force 13 (TF13) Guide to Standardized Roadside Safety Hardware online publication. Designators given when possible in parentheses.
2. Install back–up plates between blockouts and w–beam or thrie–beam rail at intermediate (non–splice) posts when steel blockouts are used but not with wood, rubber, plastic, or other approved blockouts.

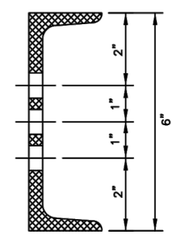

SECTION B–B

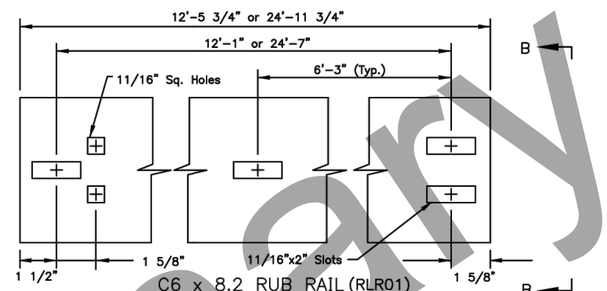

C6 x 8.2 RUB RAIL (RLR01)
ASTM A36 STEEL

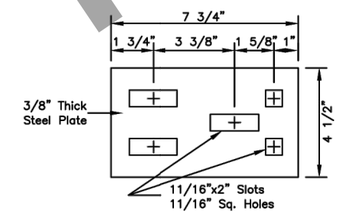

SPLICE PLATE (RLR01)
ASTM A36 STEEL

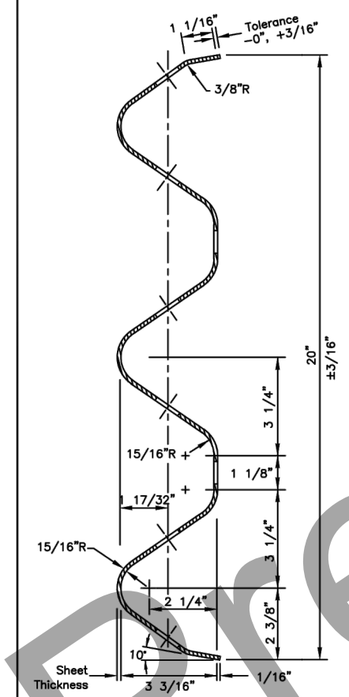

SECTION C–C
(RTM01a–02b)

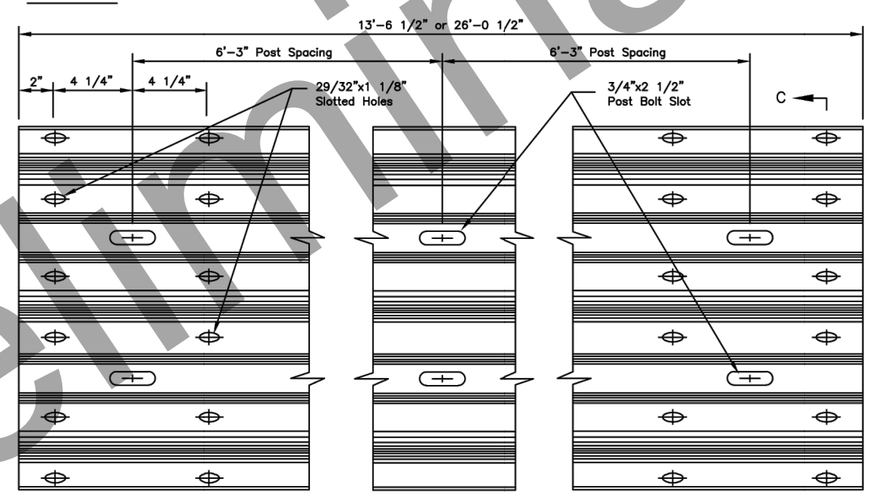

STANDARD THRIE BEAM PANEL (RTM01a–02b)

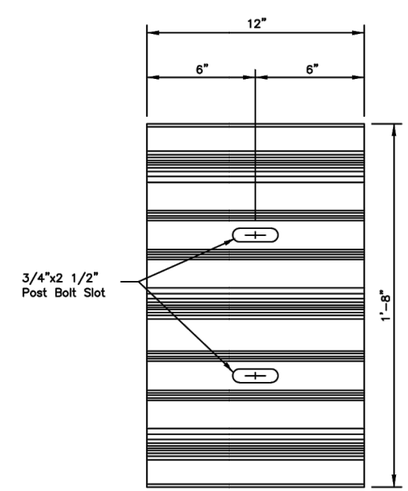

THRIE BEAM BACKUP PLATE
(RTB01a–02b)

State of Alaska DOT&PF
ALASKA STANDARD PLAN

STANDARD GUARDRAIL HARDWARE (RAILS AND SPLICES)

Adopted as an Alaska Standard Plan by: Carolyn Morehouse
Carolyn Morehouse, P.E.
Chief Engineer

Adoption Date: 7/17/2020

Last Code and Stds. Review
By: KLK Date: 7/8/2020

Next Code and Standards Review Date: 7/8/2030

G–00.05

Preliminary Plans

PLANS DEVELOPED BY: STATE OF ALASKA DEPARTMENT OF TRANSPORTATION & PUBLIC FACILITIES, NORTHERN REGION, 2301 PEGER ROAD, FAIRBANKS, AK 99709 (907)451–2200
C:\Users\Ubergstrom\Desktop\Home Work Homw\Home Rich\03 Drafting\Std V dwgs\G 00.05–STANDARD PLAN G–00.05 2 OF 5 Fri, Aug/07/20 02:51pm

NO.	DATE	REVISION

STATE	PROJECT DESIGNATION	YEAR	SHEET NO.	TOTAL SHEETS
ALASKA	PENDING/NFHWY00355	2020	V3	V16

G-00.05 SHEET 3 of 5

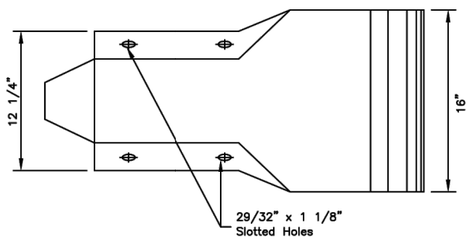

PROFILE

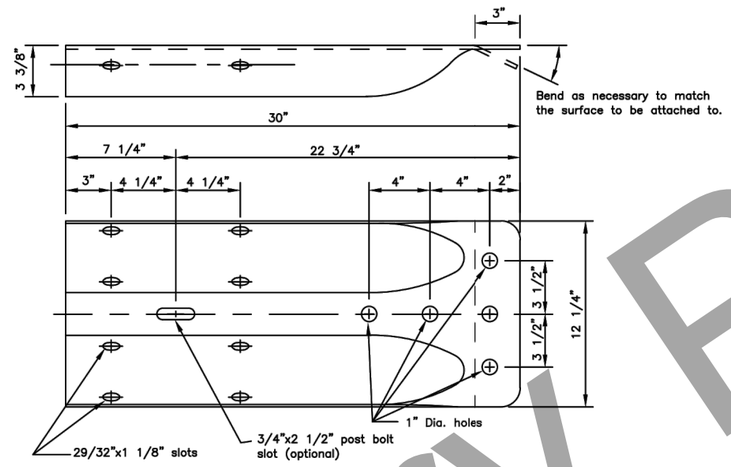

STANDARD W-BEAM TERMINAL CONNECTOR
(RWE02)

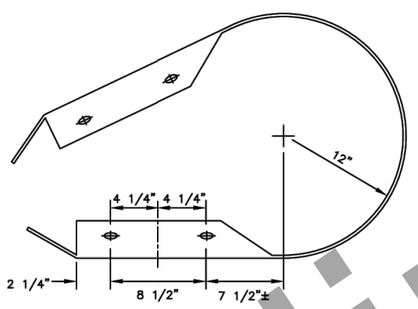

W-BEAM PLAN VIEW
*Radius to be specified on the plans

STANDARD W-BEAM END SECTION
(RWE06)

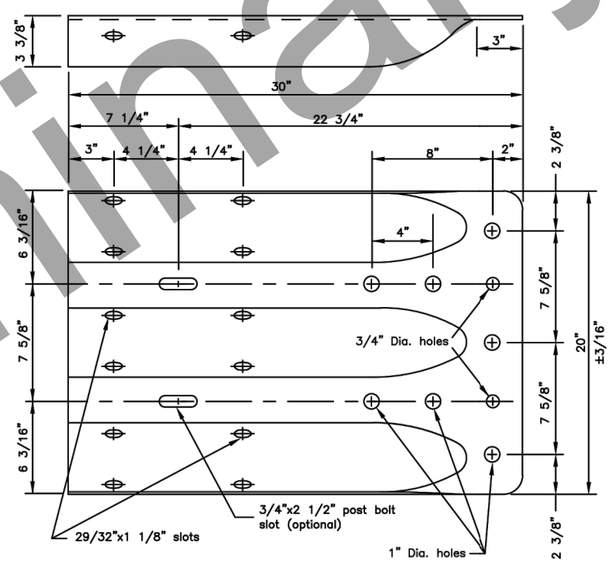

STANDARD THRIE BEAM TERMINAL CONNECTOR
(RTE01b)

GENERAL NOTES:

1. W-Beam and Thrie Beam Terminal Connectors shall conform to AASHTO M 180, Class B, Type II.
2. W-Beam end sections shall conform to AASHTO M 180, Class A, Type II.
3. All covered hardware shall comply with the Task Force 13 (TF13) Guide to Standardized Roadside Safety Hardware online publication. Designators given when possible in parentheses.

State of Alaska DOT&PF
ALASKA STANDARD PLAN

STANDARD GUARDRAIL HARDWARE (TERMINAL CONNECTORS)

Adopted as an Alaska Standard Plan by: Carolyn Morehouse
Carolyn Morehouse, P.E.
Chief Engineer

Adoption Date: 7/17/2020

Last Code and Stds. Review
By: KLK Date: 7/8/2020

Next Code and Standards Review Date: 7/8/2030

G-00.05

Preliminary Plans

STANDARD PLAN G-00.05
3 OF 5

PLANS DEVELOPED BY: STATE OF ALASKA DEPARTMENT OF TRANSPORTATION & PUBLIC FACILITIES, NORTHERN REGION, 2301 PEGER ROAD, FAIRBANKS, AK 99709 (907)451-2200
C:\Users\tjbergstrom\Desktop\Home Work Homw\Home Rich\03 Drafting\std V dwgs\G 00.05-STANDARD PLAN G-00.05 3 OF 5 Fri, Aug/07/20 02:32pm

NO.	DATE	REVISION

STATE	PROJECT DESIGNATION	YEAR	SHEET NO.	TOTAL SHEETS
ALASKA	PENDING/NFHWY00355	2020	V4	V16

G-00.05 SHEET 4 of 5

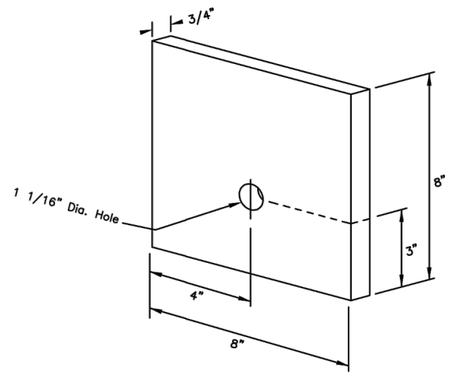

BEARING PLATE for CRT TERMINAL ANCHOR
(FPB01)

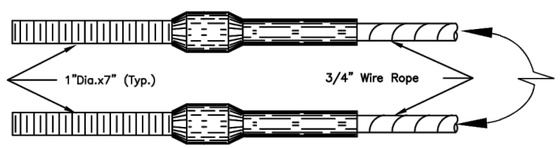

SWAGED FITTING DETAIL
(FCA01-02)

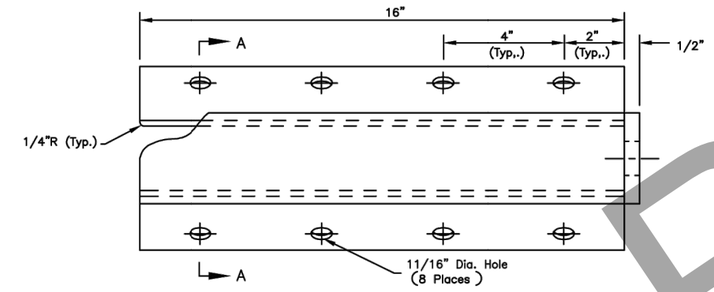

CABLE ANCHOR PLATE
(FPA01)

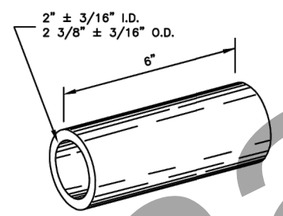

SLEEVE DETAIL
(FMM02)

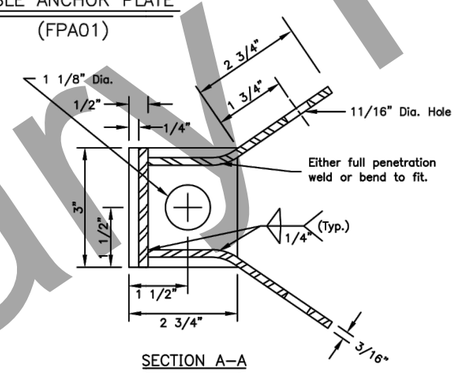

SECTION A-A

CONTROLLED RELEASE TERMINAL HARDWARE DETAILS

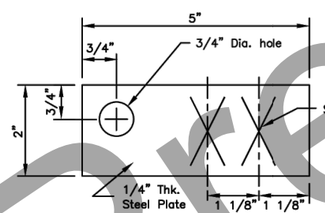

RADIUS I.D. PLATE

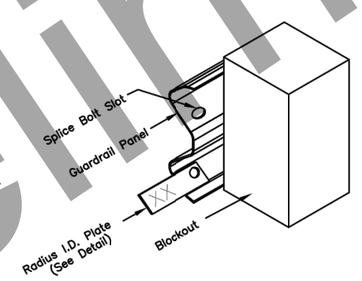

RADIUS I.D. PLATE MOUNTING DETAIL

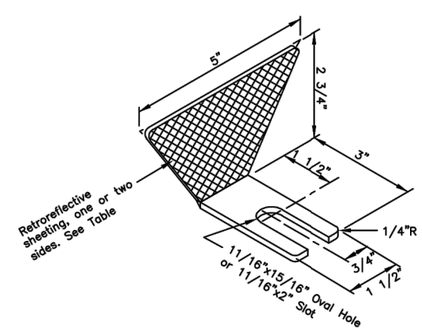

GUARDRAIL REFLECTOR

Guardrail Reflector Table

Type	Color	Reflectorized
A	White	Front & Rear
B	White	Front
C	Yellow	Front
D	Yellow	Front & Rear

GENERAL NOTES:

1. Cable Anchor Plate may be formed in single unit or welded fabrication.
2. Anchor Cable Assembly must conform to AASHTO M 30 with Type II Wire Rope.
3. Provide Sleeve for Wood Posts meeting the requirements of ASTM A53 and made of 2-inch galvanized standard pipe. Sleeve shall be a tight, pressed fit in post.
4. Attach radius ID plates to all shop-bent guardrail sections. Bolt the ID plates to the back side of the guardrail panel with the lower splice bolt nearest the P.C. of the radius.
5. Show the Rail bend radius, in feet, as "XX" on the radius ID plate. Digits shall be etched or stamped and have a min. height of 1 1/2" and a max. width of 3/4". Galvanize the plate after the digits are marked.
6. All covered hardware shall comply with the Task Force 13 (TF13) Guide to Standardized Roadside Safety Hardware online publication. Designators given when possible in parentheses.

State of Alaska DOT&PF
ALASKA STANDARD PLAN

STANDARD GUARDRAIL HARDWARE (MISCELLANEOUS)

Adopted as an Alaska Standard Plan by: Carolyn Morehouse
Carolyn Morehouse, P.E.
Chief Engineer

Adoption Date: 7/17/2020

Last Code and Stds. Review
By: KLK Date: 7/8/2020

Next Code and Standards Review Date: 7/8/2030

G-00.05

Preliminary Plans

STANDARD PLAN G-00.05
4 OF 5

PLANS DEVELOPED BY: STATE OF ALASKA DEPARTMENT OF TRANSPORTATION & PUBLIC FACILITIES, NORTHERN REGION, 2301 PEGER ROAD, FAIRBANKS, AK 99709 (907)451-2200
C:\Users\jbergstrom\Desktop\Home Work Home\Home Rich\03 Drafting\std V dwgs\G 00.05-STANDARD PLAN G-00.05 4 OF 5 Fri, Aug/07/20 02:53pm

NO.	DATE	REVISION

STATE	PROJECT DESIGNATION	YEAR	SHEET NO.	TOTAL SHEETS
ALASKA	PENDING/NFHWY00355	2020	V5	V16

G-00.05

SHEET 5 of 5

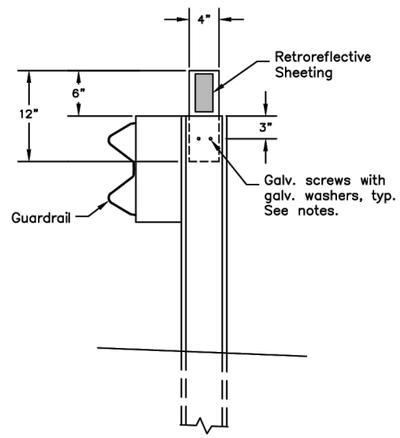

GUARDRAIL FLEXIBLE DELINEATOR DETAIL

(Steel post shown – similar for wood post)

CONSTRUCTION NOTES

1. Install guardrail flexible delineators where shown on the plans.
2. Install guardrail flexible delineators at 50 foot spacing, unless otherwise noted on the plans. Install not less than 2 delineators per guardrail run.
3. Use 3" x 5" white/yellow/red retroreflective sheeting as required per Standard Plan T–05. Install retroreflective sheeting on both sides of delineator on two–way roads.
4. Attach 4" x 12" flexible delineators to the top of new guardrail posts, on the trailing side of the posts relative to the adjacent lane's direction of travel.
5. Use 2 each 1/4" dia. x 1–1/2" long galvanized lag screws for attaching to wood posts and 2 each 1/4" dia. x 3/4" long galvanized self–drilling fasteners for steel posts. Install a galvanized washer between the fastener head and the flexible delineator.

State of Alaska DOT&PF
ALASKA STANDARD PLAN

STANDARD GUARDRAIL HARDWARE (FLEXIBLE DELINEATORS)

Adopted as an Alaska Standard Plan by: Carolyn Morehouse
Carolyn Morehouse, P.E.
Chief Engineer

Adoption Date: 7/17/2020

Last Code and Stds. Review
By: KLK Date: 7/8/2020

Next Code and Standards Review Date: 7/8/2030

G–00.05

Preliminary Plans

STANDARD PLAN G–00.05
5 OF 5

PLANS DEVELOPED BY: STATE OF ALASKA DEPARTMENT OF TRANSPORTATION & PUBLIC FACILITIES, NORTHERN REGION, 2301 PEGER ROAD, FAIRBANKS, AK 99709 (907)451–2200
C:\Users\Ubergstrom\Desktop\Home Work Hornw\Home Rich\03 Drafting\std V dwgs\G 00.05–STANDARD PLAN G–00.05 5 OF 5 Fri, Aug/07/20 02:53pm

NO.	DATE	REVISION

STATE	PROJECT DESIGNATION	YEAR	SHEET NO.	TOTAL SHEETS
ALASKA	PENDING/NFHWY00355	2020	V6	V16

G-05.11S

SHEET 1 of 1

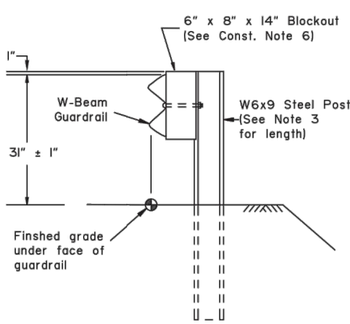

TYPE I POST INSTALLATION

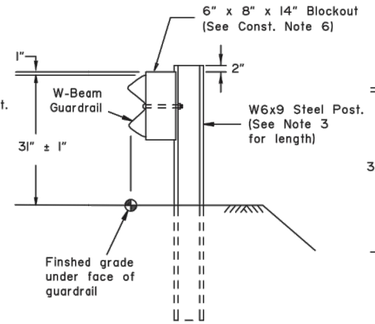

TYPE II POST INSTALLATION

(Facilitates raising rail for future overlays.)

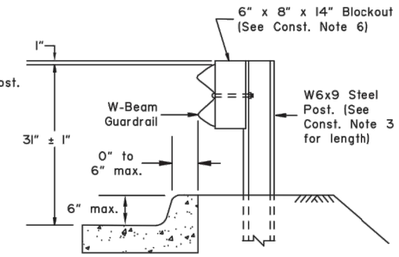

TYPE III POST INSTALLATION

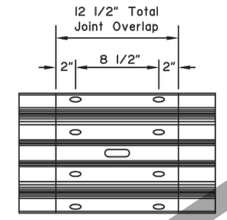

SPLICE DETAIL

(At mid span between posts only. Bolts not shown for clarity)

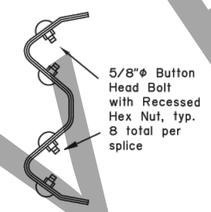

SPLICE CROSS-SECTION

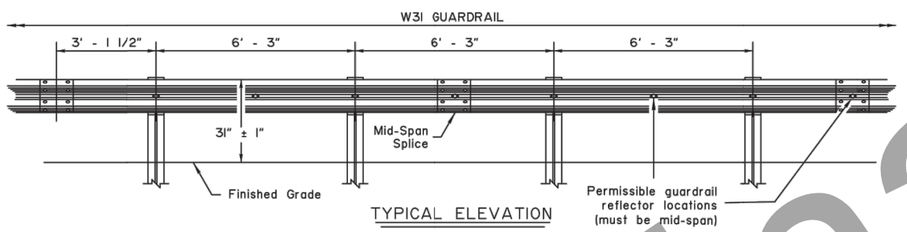

TYPICAL ELEVATION

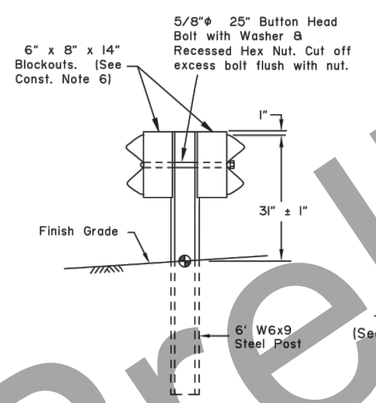

TYPE IV DOUBLE SIDED INSTALLATION

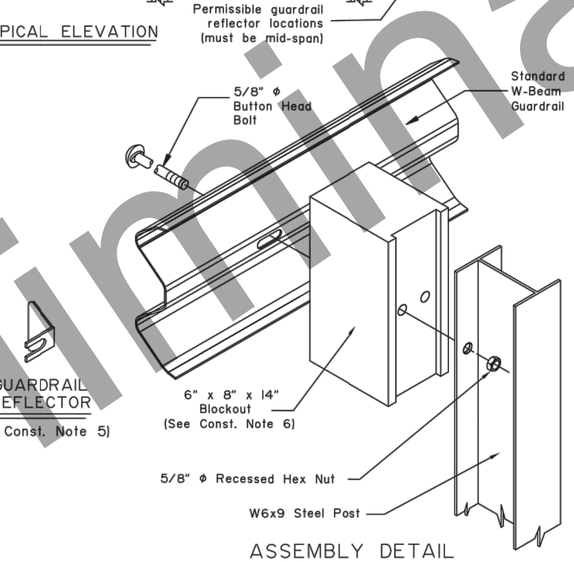

ASSEMBLY DETAIL

(Type I post shown)

GUARDRAIL REFLECTOR

(See Const. Note 5)

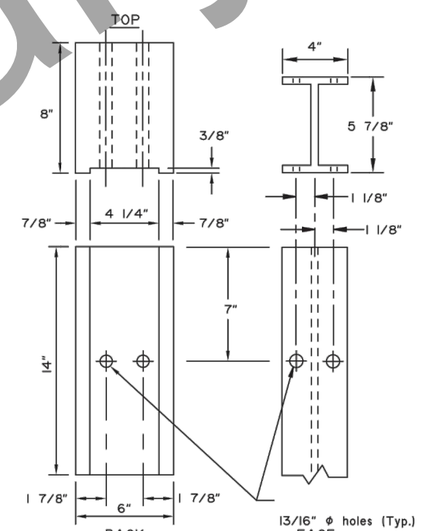

6" x 8" BLOCKOUT

W6x9 STEEL POST

CONSTRUCTION NOTES:

1. Provide hardware compliant with the Task Force 13 (TF13) Guide to Standardized Roadside Safety Hardware.
2. See Standard Plan G-00 for hardware details not shown on this drawing.
3. See Standard Plan G-10 for post lengths corresponding to different combinations of slope and behind-post embankment width.
4. Typical post spacing is 6'-3" center to center.
5. Attach guardrail reflector to guardrail using a 5/8" button head bolt with 5/8" recessed head hex nut and steel washer at location shown in the Typical Elevation. Install reflectors every 25' on tangents and every 12.5' on curves starting 100' before the P.C. and ending 100' after the P.T.
6. Use wood or synthetic blockouts designed, tested, and passed per MASH for use with steel posts. Either bolt hole on the blockout may be used for attachment.
7. Use a 25 linear foot transition to match differing height of existing or new rail elements and end treatments - see Standard Plan G-11.
8. W6x8.5 steel post may be substituted for W6x9 steel post.
9. Install flexible delineators on guardrail posts when called for in the contract. See Standard Plan G-00 for guardrail flexible delineator details.

DESIGN NOTES:

1. No fixed objects allowed within 36" of the back side of guardrail post.
2. This barrier is acceptable under MASH Tests 3-10 and 3-11.

State of Alaska DOT&PF
ALASKA STANDARD PLAN

STEEL POST W31 GUARDRAIL

Adopted as an Alaska Standard Plan by: Carolyn Morehouse
Carolyn Morehouse, P.E.
Chief Engineer

Adoption Date: 05/15/2019

Last Code and Stds. Review
By: LRG Date: 5/15/2019

Next Code and Standards Review date: 5/15/2029

G-05.11S

Preliminary Plans

STANDARD PLAN G-05.11S

PLANS DEVELOPED BY: STATE OF ALASKA DEPARTMENT OF TRANSPORTATION & PUBLIC FACILITIES, NORTHERN REGION, 2301 PEGER ROAD, FAIRBANKS, AK 99709 (907)451-2200
C:\Users\jbergstrom\Desktop\Home Work Home\Home Rich\03 Drafting\std V dwgs\g05115_NR-STANDARD PLAN G-05.11S Fri, Aug/07/20 02:54pm

NO.	DATE	REVISION

STATE	PROJECT DESIGNATION	YEAR	SHEET NO.	TOTAL SHEETS
ALASKA	PENDING/NFHWY00355	2020	V7	V16

G-10.20

SHEET 1 of 1

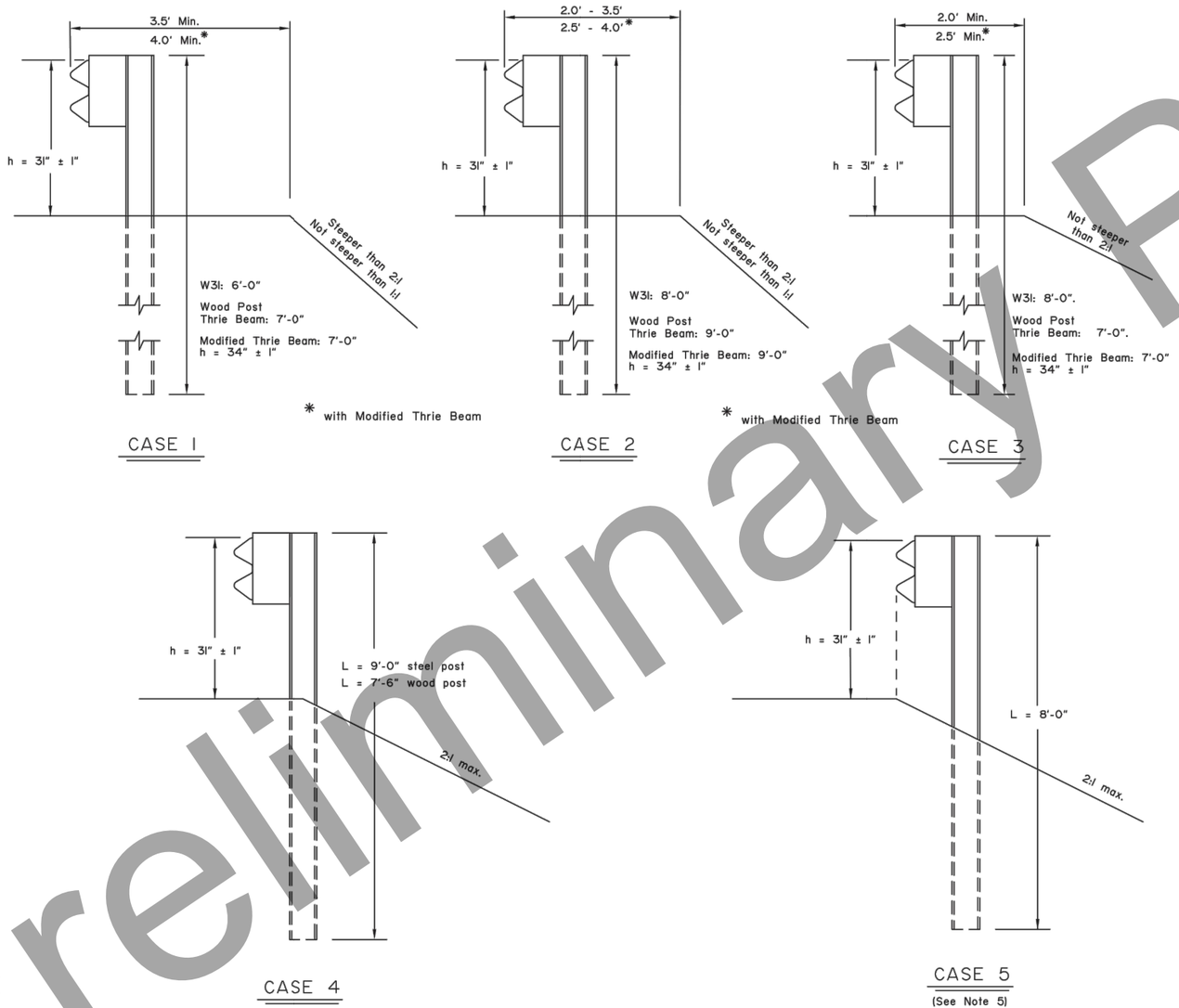

CONSTRUCTION NOTES:

1. This drawings is to be used for post length determination only. See Plans for slopes and behind-post embankment widths.
2. To determine post length, identify the case that matches site conditions and read the length corresponding to the pertinent guardrail type.
3. These dimensions apply to both curbed and uncurbed section.
4. Case 1, 2 and 3 are shown with steel posts. Wood posts may be substituted when allowed by specifications. Wood Post Thrie Beam installations must use wood posts only.
5. Case 4 and 5 apply to W31 guardrail only.

DESIGN NOTES:

1. No fixed objects allowed within 36" of the back of post for Cases 1, 2 & 3.
2. No fixed objects allowed within 48" of the back of post for Cases 4 & 5.

State of Alaska DOT&PF
ALASKA STANDARD PLAN

GUARDRAIL POST INSTALLATION

Adopted as an Alaska Standard Plan by: Kenneth J. Fisher, P.E.
Chief Engineer

Adoption Date: 02/08/2019

Last Code and Stds. Review
By: Date:

Next Code and Standards Review date: 02/08/2029

G-10.20

Preliminary Plans

STANDARD PLAN G-10.20

PLANS DEVELOPED BY: STATE OF ALASKA DEPARTMENT OF TRANSPORTATION & PUBLIC FACILITIES, NORTHERN REGION, 2301 PEGER ROAD, FAIRBANKS, AK 99709 (907)451-2200
C:\Users\jbergstrom\Desktop\Home Work Home\Home Rich\03 Drafting\std V dwgs\g1020_NR-STANDARD PLAN G-10.20 Fri, Aug/07/20 02:55pm

NO.	DATE	REVISION

STATE	PROJECT DESIGNATION	YEAR	SHEET NO.	TOTAL SHEETS
ALASKA	PENDING/NFHWY00355	2020	V8	V16

G-20.12

SHEET 1 of 1

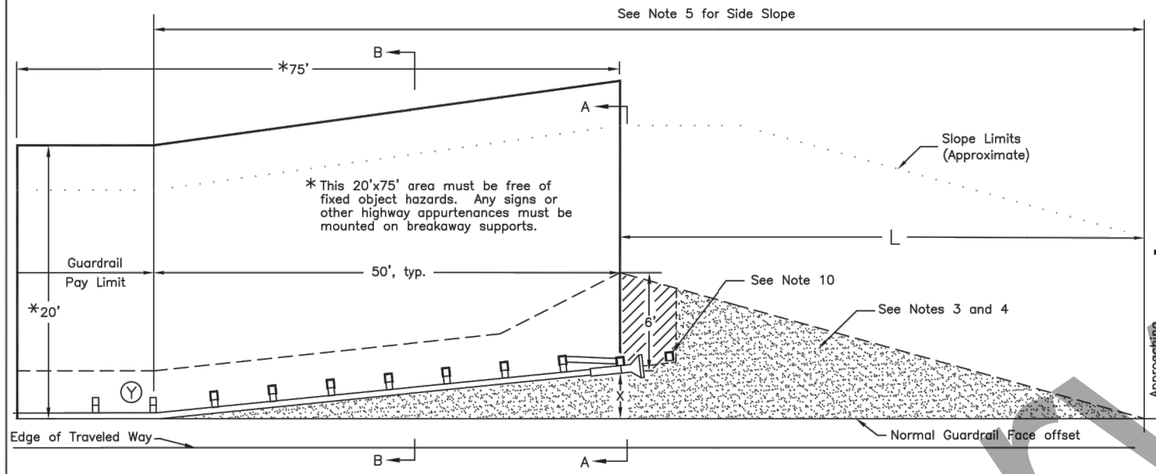

STANDARD GUARDRAIL TERMINAL WIDENING DETAIL

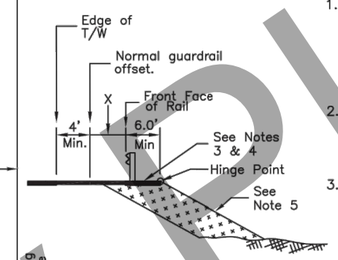

SECTION A–A

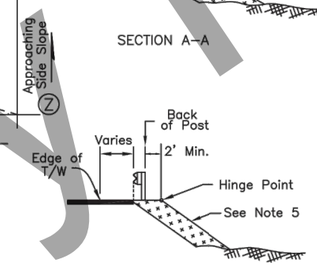

SECTION B–B
(Applies to both details)

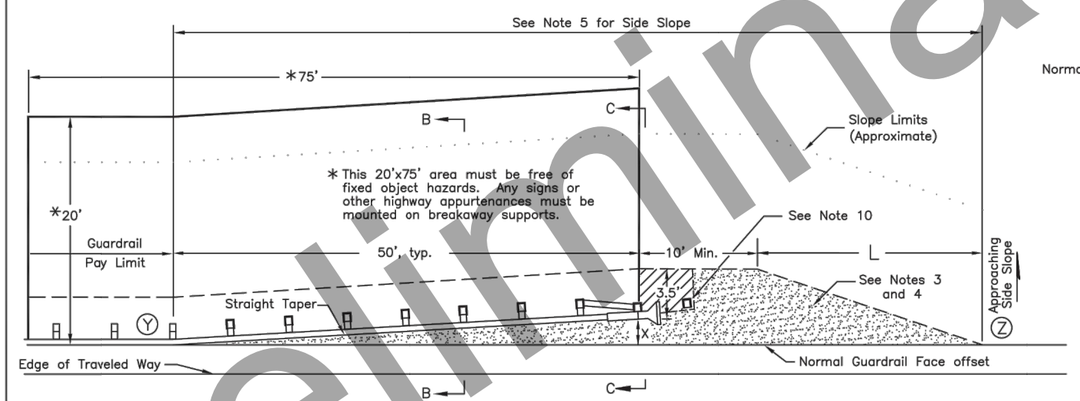

ALTERNATE GUARDRAIL TERMINAL WIDENING DETAIL

(USE ONLY WHEN LIMITED RIGHT–OF–WAY OR LIMITING SITE CONDITIONS MAKE THE STANDARD DETAIL INFEASIBLE)

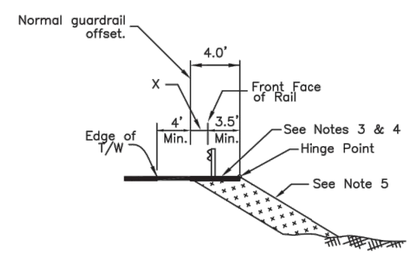

SECTION C–C

X=End offset. See manufacturer's information for the range of acceptable end offsets for each MASH compliant terminal.

Taper Lengths (L) for Common End Offsets (X)		
End Offset	Standard Detail	Alternate Detail
0'	24.0'	13.0'
1'	26.0'	17.0'
1.5'	28.0'	19.0'
2'	30.0'	21.0'
2.5'	32.0'	22.0'
4'	37.0'	28.0'
Interpolate if the end offset falls between table values		

GENERAL NOTES

1. This Std. Dwg. applies to all MASH approved guardrail end terminals (GETs). The alternate detail may only be used with parallel or tangent GETs. The terminal details shown are for illustration only – see manufacturer's drawings for actual post, rail, strut, etc. configuration and layout.
2. Use this Std. Widening Detail for all GETs except when limited right–of–way or limiting site conditions make the use of the Std. Widening Detail infeasible. In that case, the alternate detail is permissable.
3. Construct the shaded areas to match the slope of the adjacent shoulder. The slope may be increased to 10:1 if identified in the plans or when approved by the engineer. Match the slope when the shoulder slopes toward the road as well as away from the road.
4. On paved roads, the shaded areas shall be paved. On gravel roads, surface the shaded areas with the same materials used to surface the travel lanes.
5. From point Ⓨ to point Ⓩ make the side slope match the approaching side slope except where it is flatter than 4:1. In that case, the slope may be steepened to 4:1.
6. Attach a flexible marker at the beginning of each GET.
7. The max. allowable height for foundation tubes or other steel components of terminal post breakaway systems is 4" above the surrounding grade.
8. The details on this sheet do not apply to W31 Downstream End Anchors (Std Dwg G–14).
9. The details on this sheet apply to GETs on both the approach and downstream ends on two–way undivided roads and to any downstream MASH compliant GETs.
10. Some MASH GET systems have an additional post/anchor at the approximate location shown. If this post/anchor is present do not pave the diagonally hatched area. If not present, pave the diagonally hatched area also.

State of Alaska DOT&PF
ALASKA STANDARD PLAN

WIDENING FOR GUARDRAIL END TERMINALS

Adopted as an Alaska Standard Plan by: Kenneth J. Fisher, P.E.
Chief Engineer

Adoption Date: 02/08/2019

Last Code and Stds. Review
By: Date:

Next Code and Standards Review date:02/08/2029

G–20.12

STANDARD PLAN G–20.12

Preliminary Plans

PLANS DEVELOPED BY: STATE OF ALASKA DEPARTMENT OF TRANSPORTATION & PUBLIC FACILITIES, NORTHERN REGION, 2301 PEGER ROAD, FAIRBANKS, AK 99709 (907)451–2200
C:\Users\jbergstrom\Desktop\Home Work Home\Home Rich\03 Drafting\std V dwgs\g2012_NR–g2012 Fri, Aug/07/20 02:56pm

STATE	PROJECT DESIGNATION	YEAR	SHEET NO.	TOTAL SHEETS
ALASKA	PENDING/NFHWY00355	2020	V9	V16

I-81.00

SHEET 1 of 1

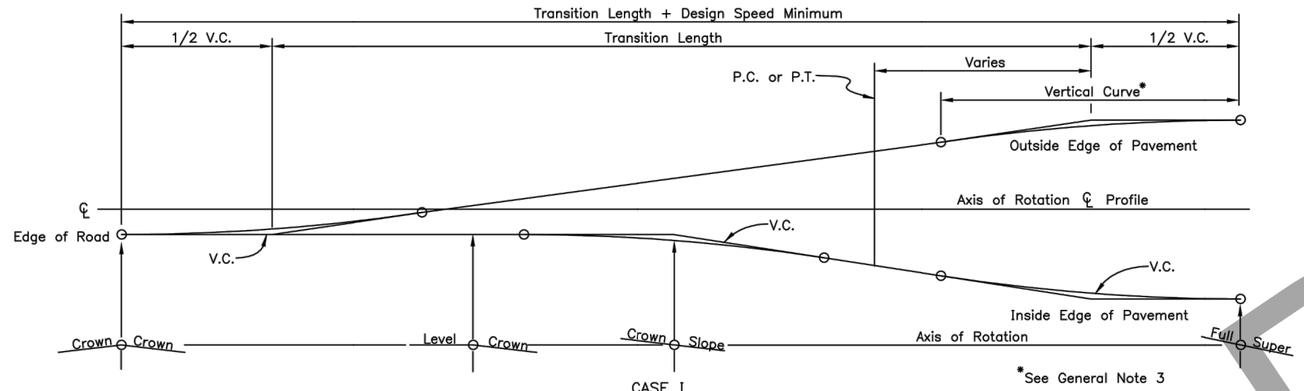

CASE I
PAVEMENT REVOLVED ABOUT CENTERLINE

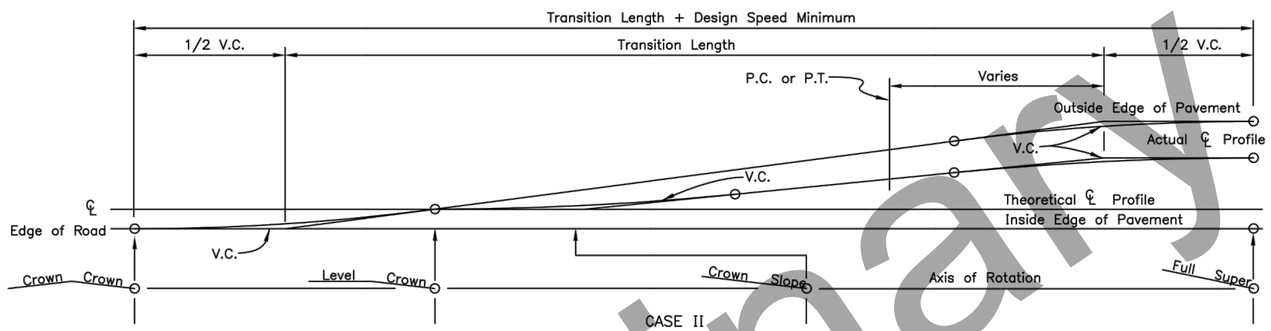

CASE II
PAVEMENT REVOLVED ABOUT INSIDE EDGE
TO BE USED WHERE DRAINAGE IS THE GOVERNING CONSIDERATION

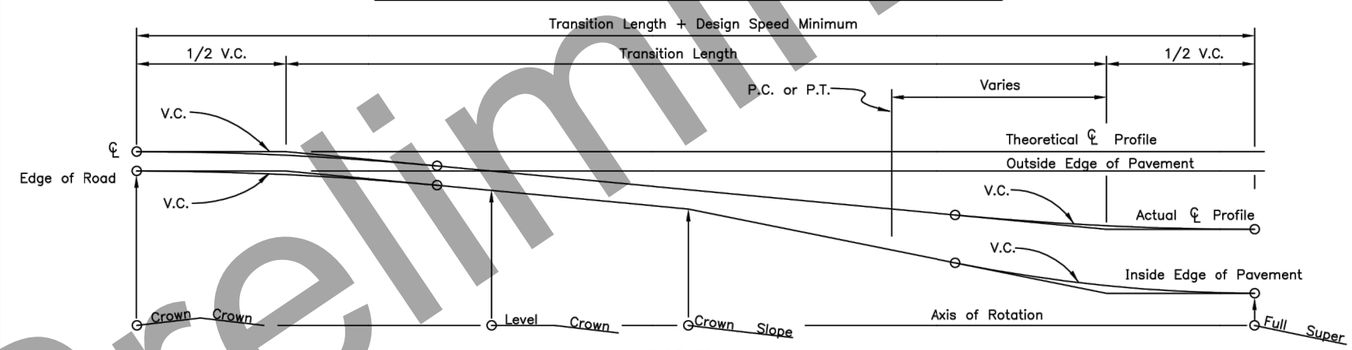

CASE III
PAVEMENT REVOLVED ABOUT OUTSIDE EDGE TO BE
USED WHERE OVERALL APPEARANCE IS THE MAIN CONTROL

GENERAL NOTES:

1. Location of transition length relative to horizontal curves will be shown on the plans or as directed by the Engineer.
2. Widening for guardrail or curvature will not change the location of the axis of rotation.
3. Minimum vertical curve length in feet shall be the numerical value of the design speed in M.P.H.
4. Superelevation shall be built into the subgrade and carried through the shoulders.

State of Alaska DOT&PF
ALASKA STANDARD PLAN

SUPERELEVATION TRANSITION

Adopted as an Alaska Standard Plan by: Carolyn Morehouse
Carolyn Morehouse, P.E.
Chief Engineer

Adoption Date: 7/17/2020

Last Code and Stds. Review
By: KLK Date: 7/8/2020

Next Code and Standards Review Date: 7/8/2030

I-81.00

Preliminary Plans

STANDARD PLAN I-81.00

PLANS DEVELOPED BY: STATE OF ALASKA DEPARTMENT OF TRANSPORTATION & PUBLIC FACILITIES, NORTHERN REGION, 2301 PEGER ROAD, FAIRBANKS, AK 99709 (907)451-2200
C:\Users\jbergstrom\Desktop\Home Work Home Rich\03 Drafting\std V dwgs\81.00_NR-I81.00 Fri, Aug/07/20 02:56pm

STATE	PROJECT DESIGNATION	YEAR	SHEET NO.	TOTAL SHEETS
ALASKA	PENDING/NFHWY00355	2020	V10	V16

S-00.12 SHEET | of |

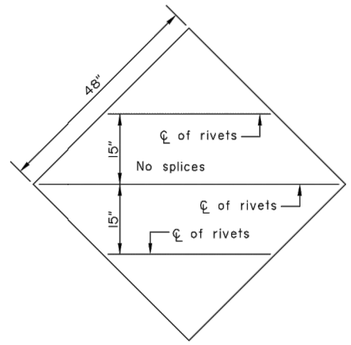

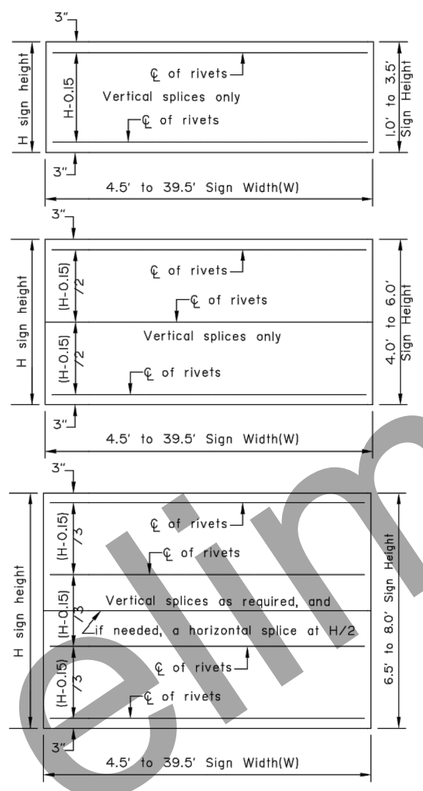

WIND FRAMING LOCATIONS

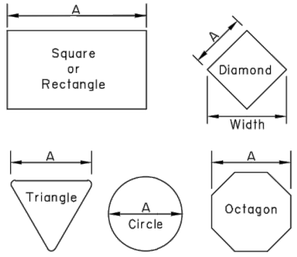

Maximum size unframed signs using 0.125" thick aluminum sheeting.	
Sign Shape	A
Squares, Shields, and Route Markers	48"
Rectangles	48"
Diamonds	48"
Triangles	48"
Rounds and Octagons	48"

Install wind framing on all signs that exceed the dimensions listed.

LIGHT SIGNS

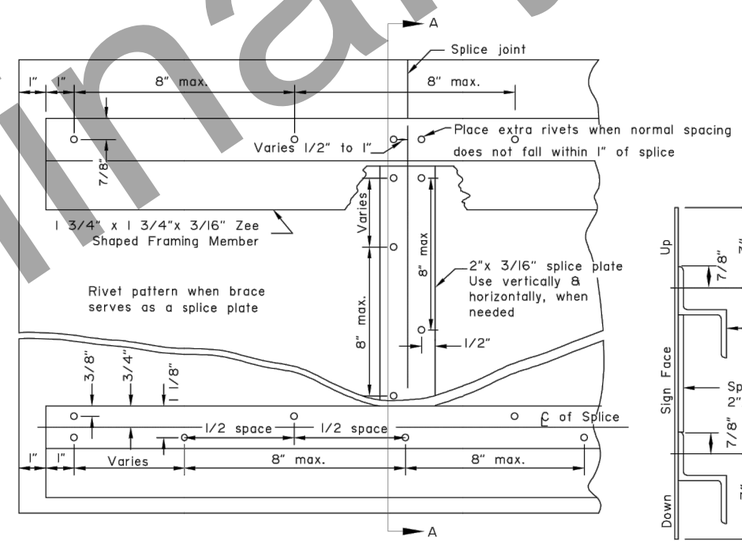

RIVET DETAIL FOR ZEE SHAPED WIND FRAMING & SPLICE PLATE

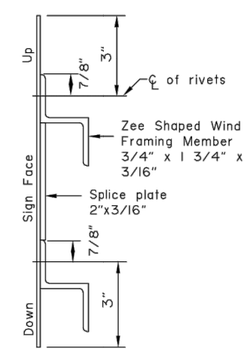

SECTION A-A

Note: Drawing not to scale

GENERAL NOTES

1. See the standard specifications for the aluminum alloys that you may use for sign sheeting and wind framing members.
2. Fabricate all signs from 0.125" thick aluminum sheeting.
3. Sign fabricators may use alternates to the zee shaped framing member with approval of the engineer, if the frame manufacturer certifies their design equals or exceeds the strength of the zee shaped design.
4. Install one piece wind framing members on all signs up to 23.5' wide. Use one splice in each wind frame on all signs wider than 23.5'. Locate splices at least 18" from all posts and panel edges. Stagger splices in adjacent framing members at least 8.0' apart.
5. Attach wind framing members with rivets or with an engineer approved, double sided, high strength, adhesive tape. Clean and handle sheeting and framing members and apply tape in accordance with the tape manufacturer's written instructions. Install two rivets in both ends of each framing member.
6. Use 3/16" diameter rivets conforming to aluminum alloy 6061-T6 for cold driven rivets, or aluminum alloy 6061-T43 for hot driven rivets.
7. Sign fabricators may use sign panels extruded with integral framing with approval of the engineer, if the manufacturer certifies their design equals or exceeds the strength of the 0.125" thick panel with framing attached to it.
8. Frame all signs taller than 8.0' with five wind framing members located (H-0.15)/4 spaces. If needed, make a horizontal splice at the middle wind frame.
9. Do not use round pipes for sign supports.

State of Alaska DOT&PF
ALASKA STANDARD PLAN

SIGN FRAMING

Adopted as an Alaska Standard Plan by: Carolyn Morehouse
Carolyn Morehouse, P.E.
Chief Engineer

Adoption Date: 7/17/2020

Last Code and Stds. Review
By: WTH Date: 7/8/2020

Next Code and Standards Review date: 7/8/2030

S-00.12

Preliminary Plans

STANDARD PLAN S-00.12

PLANS DEVELOPED BY: STATE OF ALASKA DEPARTMENT OF TRANSPORTATION & PUBLIC FACILITIES, NORTHERN REGION, 2301 PEGER ROAD, FAIRBANKS, AK 99709 (907)451-2200
C:\Users\jbergstrom\Desktop\Home Work Home\Home Rich\03 Drafting\std V dwgs\S011_NR-STANDARD PLAN S-00.12 Fri, Aug/07/20 02:57pm

STATE	PROJECT DESIGNATION	YEAR	SHEET NO.	TOTAL SHEETS
ALASKA	PENDING/NFHWY00355	2020	V11	V16

S-01.02 SHEET 1 of 1

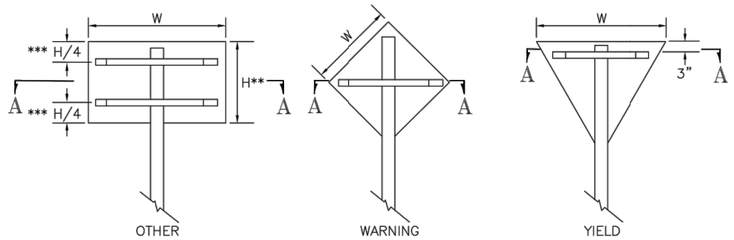

*** Use one brace when H ≤ 18"
Use two braces when 18"< H < 48"
Use three braces when H ≥ 48"

** Position of brace may be varied to match Predrilled mounting holes in panel

SIGN BRACING PLACEMENT

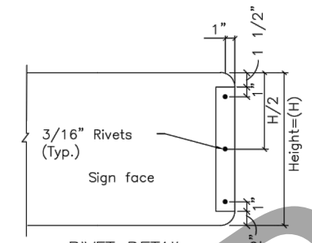

RIVET DETAIL ELEVATION VIEW

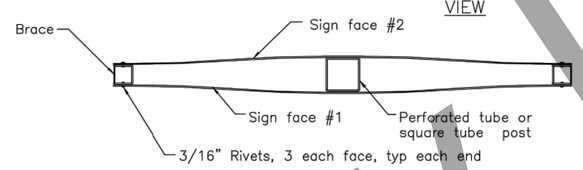

PLAN VIEW

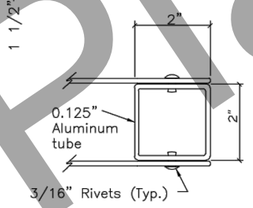

END BRACE DETAIL

SMALL STREET NAME SIGN (D3-1, D3-1A, D3-1D) BRACING DETAILS

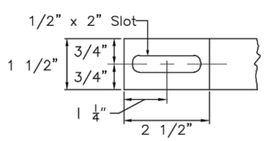

DETAIL OF BRACE SLOT
Elevation view

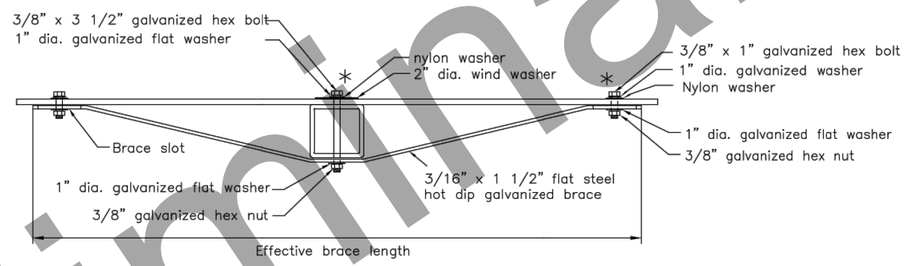

TUBE POST SIGN BRACING SECTION A-A
Plan view

* Adjust location of bracing so that bolts and washers will miss the sign legend

Sign Width(W)	Effective Brace Length		
	Warning	Yield	Other
30"	36"	24"	24"
36"	42"	30"	30"
42"	48"	–	36"
48"	Two posts	36"	42"

< 30" No bracing required and use square tube

Note: Drawing not to scale

State of Alaska DOT&PF
ALASKA STANDARD PLAN

BRACING FOR SIGNS MOUNTED ON SINGLE POST

Adopted as an Alaska Standard Plan by: Carolyn Morehouse
Carolyn Morehouse, P.E.
Chief Engineer

Adoption Date: 7/17/2020

Last Code and Stds. Review
By: WTH Date: 7/8/2020

Next Code and Standards Review date: 7/8/2030

S-01.02

STANDARD PLAN S-01.02

Preliminary Plans

PLANS DEVELOPED BY: STATE OF ALASKA DEPARTMENT OF TRANSPORTATION & PUBLIC FACILITIES, NORTHERN REGION, 2301 PEGER ROAD, FAIRBANKS, AK 99709 (907)451-2200
C:\Users\Ubergstrom\Desktop\Home Work Home Rich\03 Drafting\std V dwgs\s0101_NR-STANDARD PLAN S-01.02 Fri, Aug/07/20 02:58pm

STATE	PROJECT DESIGNATION	YEAR	SHEET NO.	TOTAL SHEETS
ALASKA	PENDING/NFHWY00355	2020	V12	V16

S-05.02

SHEET 1 of 1

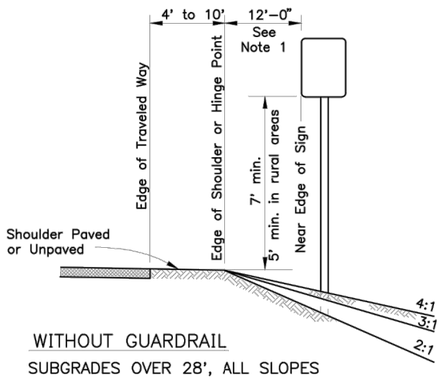

WITHOUT GUARDRAIL

SUBGRADES OVER 28', ALL SLOPES

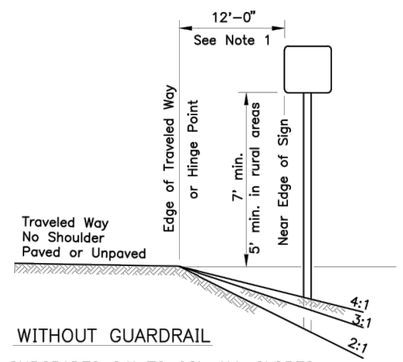

WITHOUT GUARDRAIL

SUBGRADES 24' TO 28', ALL SLOPES

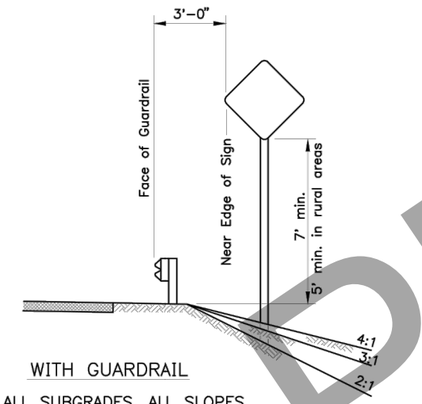

WITH GUARDRAIL

ALL SUBGRADES, ALL SLOPES

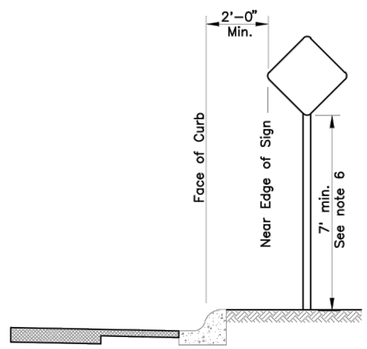

CURB WITHOUT SIDEWALK

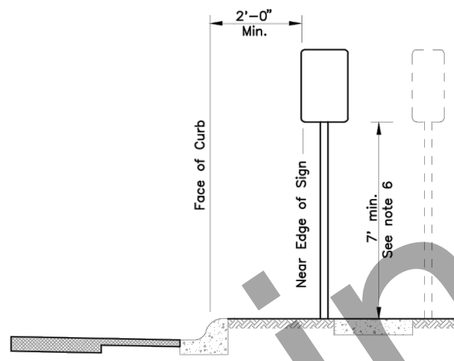

CURB WITH PARKWAY AND SIDEWALK

(If R/W width permits, signs should be placed behind sidewalk.)

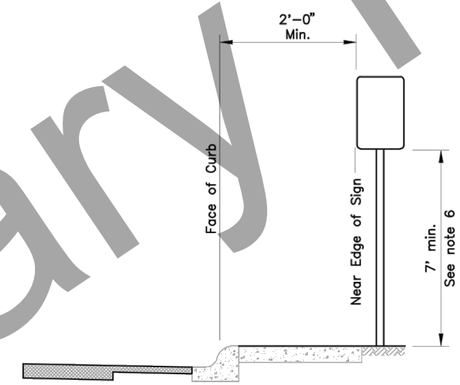

CURB WITH SIDEWALK WITHOUT PARKWAY

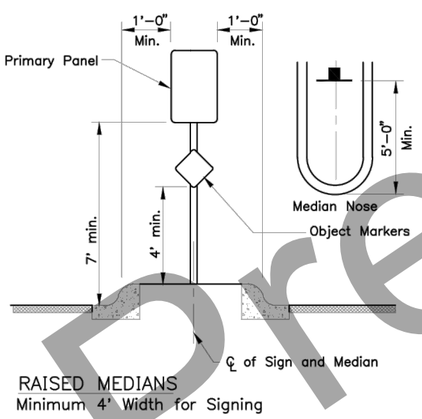

RAISED MEDIANS

Minimum 4' Width for Signing

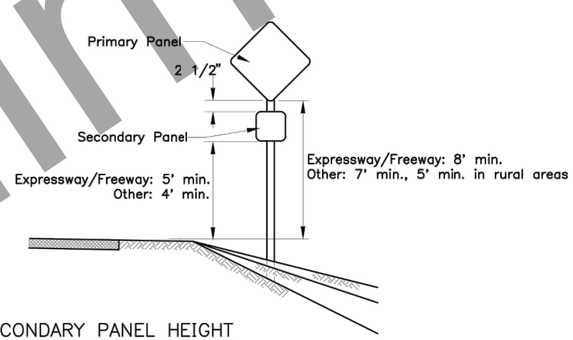

SECONDARY PANEL HEIGHT

ALL TWO PANEL MOUNTING

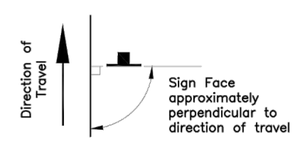

SIGN POSITIONING

GENERAL NOTES

1. Unless shown otherwise on the plans, the standard sign offset is 12'. The minimum is 6' where shoulder width is 6' or greater.
2. Add 6" to mounting height on unpaved roads.
3. If signs extend over bike paths, the minimum vertical clearance is 8' 0".
4. When signs are placed 30' or more from the edge of traveled way, mount them with the bottom of the sign at least 5' above the road surface at the near edge of the road.
5. When multiple hinged sign supports are used, mount hinges at least 7' above the ground.
6. Minimum mounting height is 7'-0" where parking or pedestrian movements are likely to occur, or where sings extend over sidewalks.
7. For construction signs in rural areas, mounting height shall be 7' minimum.

State of Alaska DOT&PF
ALASKA STANDARD PLAN

POST MOUNTED SIGN
OFFSET AND HEIGHT

Adopted as an Alaska Standard Plan by: Carolyn Morehouse
Carolyn Morehouse, P.E.
Chief Engineer

Adoption Date: 7/17/2020

Last Code and Stds. Review
By: KLK Date: 7/8/2020

Next Code and Standards Review Date: 7/8/2030

S-05.02

Preliminary Plans

STANDARD PLAN S-05.02

PLANS DEVELOPED BY: STATE OF ALASKA DEPARTMENT OF TRANSPORTATION & PUBLIC FACILITIES, NORTHERN REGION, 2301 PEGER ROAD, FAIRBANKS, AK 99709 (907)451-2200
C:\Users\jbergstrom\Desktop\Home Work Homw\Home Rich\03 Drafting\std V dwgs\9050I_NR-STANDARD PLAN S-05.02 Fri, Aug/07/20 02:59pm

S-30.05

SHEET 1 of 1

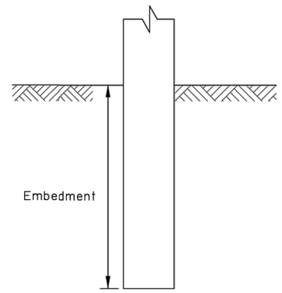

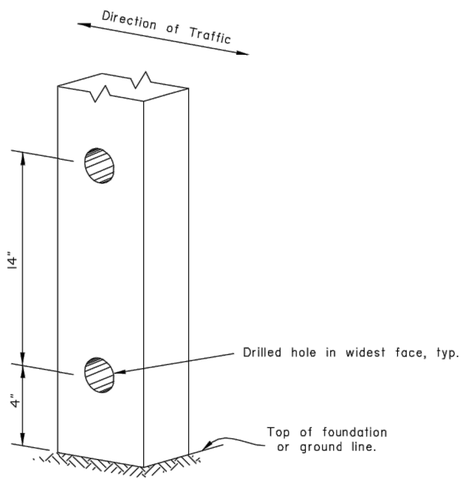

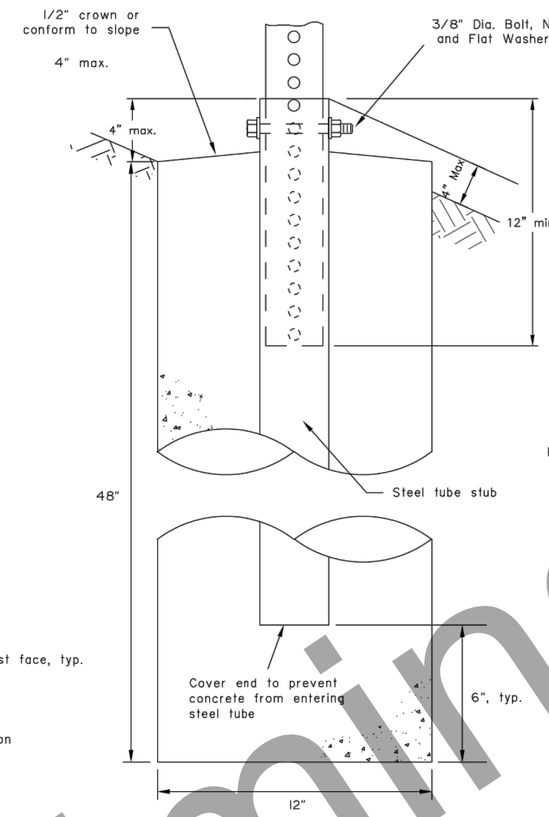

SLEEVE TYPE
CONCRETE FOUNDATION

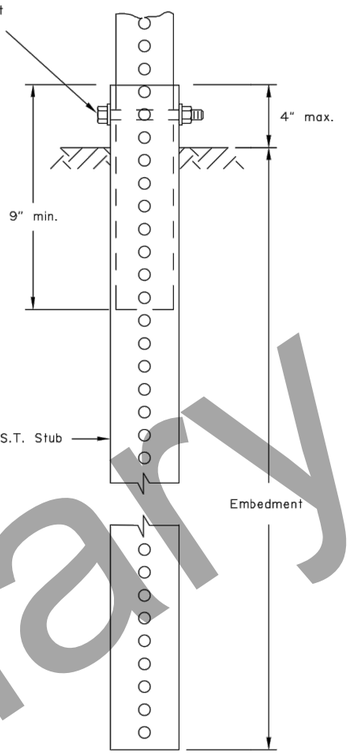

SLEEVE TYPE*
SOIL EMBEDMENT

GENERAL NOTES:

1. Sign shall be placed symmetrically around posts and refer to Standard Plan S-00 for sign framing details.
2. See plans for type of post, size and embedment type.
3. To maintain crashworthiness, install no more than the number of P.S.T.s or wood posts specified in the tables within 7' of each other.
4. Concrete shall be class B.
5. Do not use the supports on this drawing for multiple support signs if supports are separated by more than 7 feet.
6. Treat all field cuts and field drilled holes in wood posts in accordance with Section 730-2.04 of the Standard Specifications.

SIGN POST SPACING NOTES:

1. Install sign support in accordance with the table below, unless otherwise required by plans or specifications.
2. Exceptions:
   a. Use one post for all E5-1 gore signs, regardless of width.
   b. Use one 2.5" P.S.T. for all STOP signs, with or without street name signs.
3. Supports placed within 7' of each other must be acceptable for that use. See tables below for the sizes of wood posts and P.S.T.s that may be used within 7'. See Manufacturer's documentation for breakaway couplings and tubes that may be used within 7'.
4. See Standard Plan S-31 for frangible couplings, hinges, and foundations for tube and W-shape sign supports.

WOOD SIGN POSTS			
SIZE	HOLE DIA.	EMBEDMENT*	NO. OF POSTS WITHIN 7 Ft. PATH
4"x4"	NONE	4'-1"	2
4"x6"	1 1/2"	5'-3"	2
6"x6"	1 1/2"	4'-9"	1
6"x8"	3"	4'-9"	1

* Embedment depth applies in both strong and weak soil.

WOOD POSTS

PERFORATED STEEL TUBES (P.S.T.)		
POST SIZE	Embedment Depth	No. of P.S.T.s permitted within 7 ft path
1 1/2" x 1 1/2"	4'-8"	2
1 3/4" x 1 3/4"	4'-6"	2
2" x 2"	4'-3"	2
2 1/4" x 2 1/4"	5'-0"	1
2 1/2" x 2 1/2"	4'-6"	1

* Use 3"x3"x3/16" Stub for 2 1/2"x2 1/2" PST Applications.

PERFORATED STEEL TUBE (PST) POSTS

TUBE SIGN POST SPACING								
Sign Width (feet)	No. of Posts	Distance Between Posts	Sign Overhang	Post Type				Notes
				P.S.T.	Wood	Steel Tube	W-Shape	
0.5 to 4.0	1	-	0.5W	X	X	X		See Note 2.
4.5 to 10.0	2	0.6W	0.2W	X	X	X		See Note 3.
10.5 to 11.0	2	6	Varies	X	X	X		See Note 3.
11.5 to 13.0	2	8	Varies				X	
13.5 to 20.0	2	0.6W	0.2W				X	
20.5 to 22.5	3	8	Varies				X	
23.0 to 29.5	3	0.35W	0.15W				X	
30.0 to 31.5	4	8	Varies				X	
32.0 to 40.0	4	0.25W	0.125W				X	

TUBE SIGN POST SPACING

Note: Drawing not to scale

State of Alaska DOT&PF
ALASKA STANDARD PLAN

LIGHT SIGN STRUCTURE
POST EMBEDMENT

Adopted as an Alaska Standard Plan by: Carolyn Morehouse
Carolyn Morehouse, P.E.
Chief Engineer

Adoption Date: 7/17/2020

Last Code and Stds. Review
By: WTH Date: 7/8/2020

Next Code and Standards Review date: 7/8/2030

S-30.05

Preliminary Plans

PLANS DEVELOPED BY: STATE OF ALASKA DEPARTMENT OF TRANSPORTATION & PUBLIC FACILITIES, NORTHERN REGION, 2301 PEGER ROAD, FAIRBANKS, AK 99709 (907)451-2200
C:\Users\jbergstrom\Desktop\Home Work Home\Home Rich\03 Drafting\std V dwgs\s3004_NR-STANDARD PLAN S-30.05 Fri, Aug/07/20 02:59pm

S-31.02

NOTE:
Install hinges when more than one post is used to support a sign. Do not install hinges on single post installations.

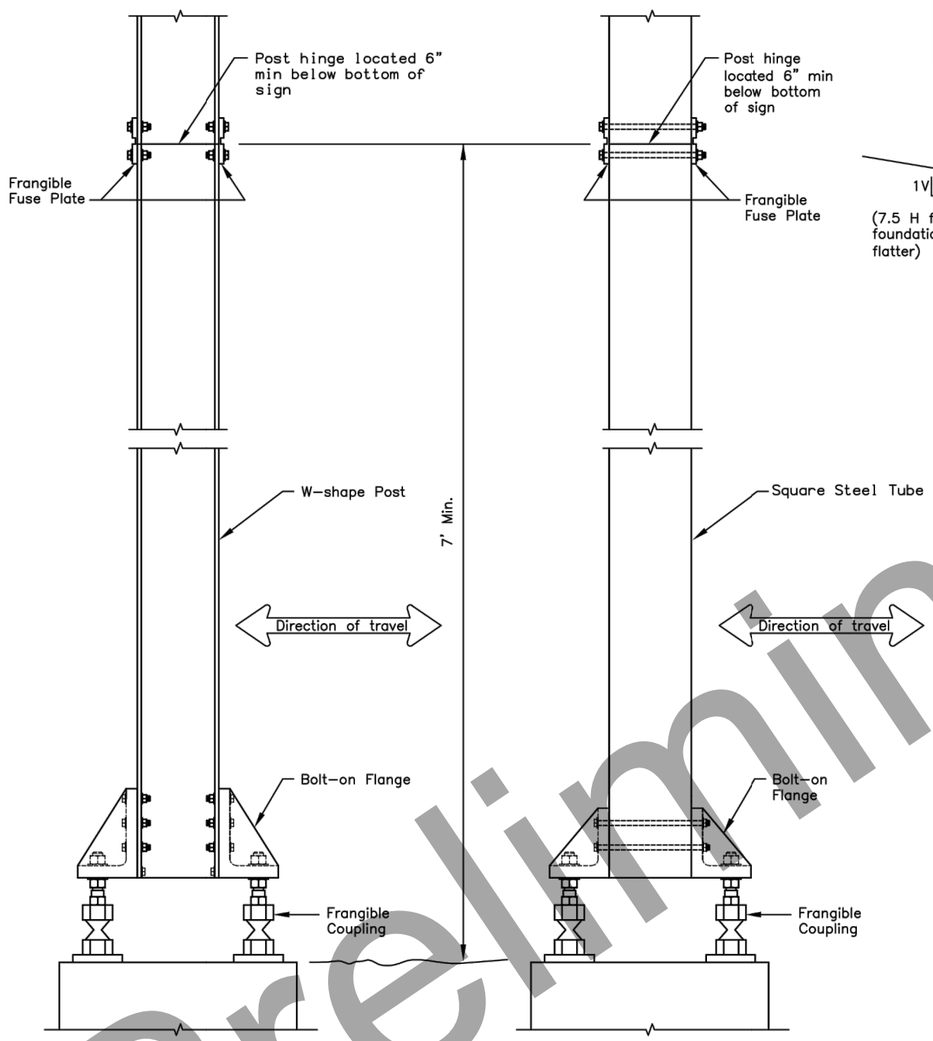

FRANGIBLE COUPLING SYSTEM FOR W-SHAPE POST

FRANGIBLE COUPLING SYSTEM FOR SQUARE STEEL TUBES

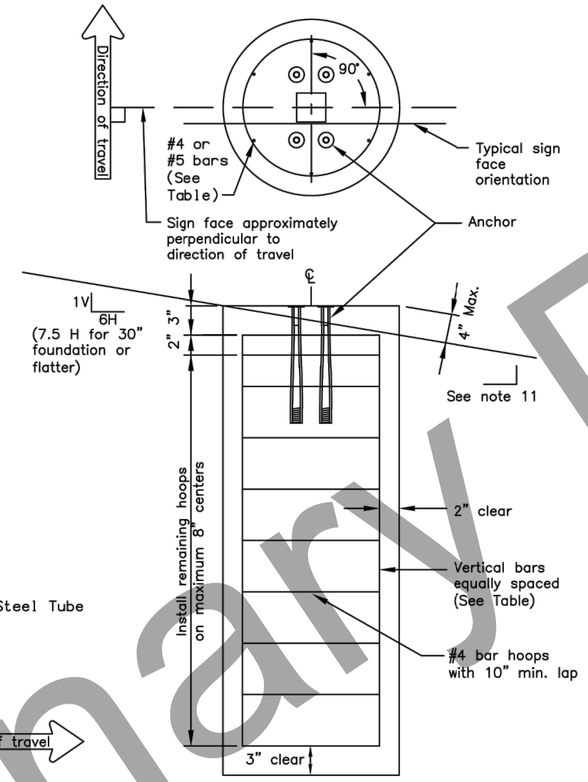

SIGN POST FOUNDATION
See Table for depth and diameter

POST SIZE & TYPE	FOUNDATION *			REINFORCEMENT					
	DIA.	MIN. DEPTH	CY^3 CONC.	VERTICAL BARS			HOOPS		
				QTY.	SIZE	LGTH.	QTY.	SIZE	DIA.
2 1/2" TUBE	1'-6"	6'-0"	0.39	7	#5	5'-6"	10	#4	1'-2"
3" TUBE	1'-6"	6'-0"	0.39	7	#5	5'-6"	10	#4	1'-2"
3 1/2" TUBE	1'-6"	6'-0"	0.39	7	#5	5'-6"	10	#4	1'-2"
4" TUBE	2'-6"	6'-0"	1.09	8	#8	5'-6"	10	#4	2'-2"
4 1/2" TUBE	2'-6"	6'-0"	1.09	8	#8	5'-6"	10	#4	2'-2"
5" TUBE	2'-6"	6'-0"	1.09	8	#8	5'-6"	10	#4	2'-2"
W6 x 9	2'-6"	6'-0"	1.09	8	#8	5'-6"	10	#4	2'-2"
W6 x 12	2'-6"	6'-0"	1.09	8	#8	5'-6"	10	#4	2'-2"
W6 x 15	3'-0"	6'-6"	1.70	8	#11	6'-0"	12	#4	2'-8"
W6 x 30	3'-0"	7'-6"	1.96	8	#11	7'-0"	13	#4	2'-8"

FOUNDATION TABLE

* Foundations sized for use where there are no loose, high moisture, or fine grained soils.

GENERAL NOTES

1. Furnish sign posts with NCHRP 350 compliant frangible couplings designed to break away safely when struck from any direction. There is no MASH compliant device at this time. See SPDR report for more info.
2. Furnish frangible coupling systems with bolt-on flanges.
3. Details on this sheet illustrate only the general components of a frangible coupling system, and are not intended to specify a particular product.
4. Install frangible fuse plates as specified by the manufacturer and hinged joints when multiple posts are used to support a sign. Do not use round pipes.
5. Install the components of the breakaway system, including hinges, in accordance with the written instructions of the system manufacturer.
6. Use Class A, B or W concrete conforming to Sections 501 or 550 of the Standard Specifications. Furnish ASTM A615 grade 60 steel bars for concrete reinforcement conforming to AASHTO M31.
7. Spiral reinforcing steel may be substituted for hoops in concrete foundation. Spiral option shall consist of #3 plain spiral with 6" pitch with three flat turns at the top and one flat turn at the bottom.
8. Install the concrete anchors using a rigid template. Locate the anchors on centers and within tolerances specified by the manufacturer.
9. Install the anchors in fresh concrete as recommended by the manufacturer. Adjust the template's final position until it is level. Remove and replace all foundations that need more than 2 shims under any 1 coupling or more than a total of 3 shims under any pair of couplings to plumb the post.
10. Drill the holes for attaching brackets before the sign posts are hot dip galvanized. Test fit templates in the holes to ensure the brackets can be installed square to the posts.
11. Special grading detail and/or shielding may be required to maintain 4" maximum clear distance.

State of Alaska DOT&PF
ALASKA STANDARD PLAN

SIGN POST BASE AND FOUNDATION

Adopted as an Alaska Standard Plan by: Carolyn Morehouse
Carolyn Morehouse, P.E.
Chief Engineer

Adoption Date: 7/17/2020

Last Code and Stds. Review
By: KLK, MJM Date: 7/8/2020

Next Code and Standards Review Date: 7/8/2030

S-31.02

Preliminary Plans

STANDARD PLAN S-31.02

PLANS DEVELOPED BY: STATE OF ALASKA DEPARTMENT OF TRANSPORTATION & PUBLIC FACILITIES, NORTHERN REGION, 2301 PEGER ROAD, FAIRBANKS, AK 99709 (907)451-2200
C:\Users\jbergstrom\Desktop\Home Work Home\Home Rich\03 Drafting\std V dwgs\s310_NR-STANDARD PLAN S-31.02 Fri, Aug/07/20 03:00pm

STATE	PROJECT DESIGNATION	YEAR	SHEET NO.	TOTAL SHEETS
ALASKA	PENDING/NFHWY00355	2020	V15	V16

T-20.04

SHEET 1 of 1

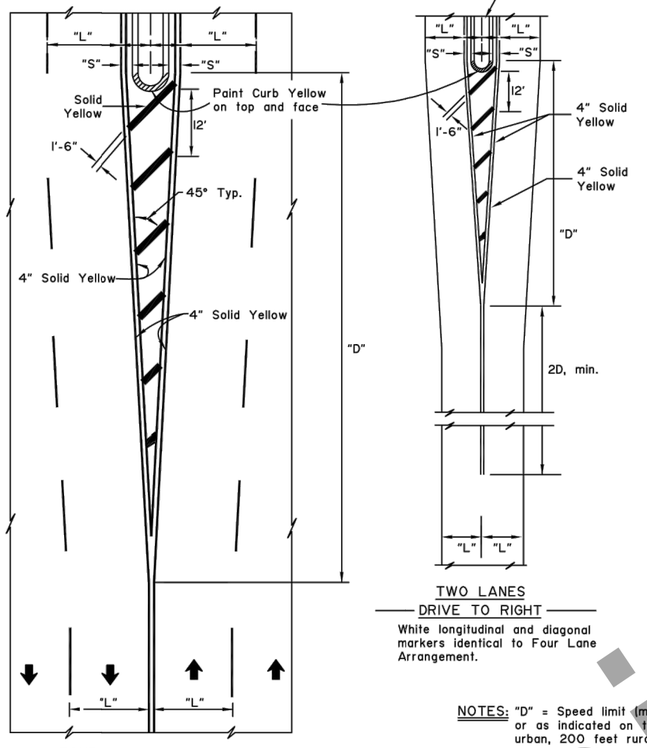

TWO LANES
DRIVE TO RIGHT

White longitudinal and diagonal markers identical to Four Lane Arrangement.

FOUR OR MORE LANES
DRIVE TO RIGHT

NOTES: "D" = Speed limit (mph) X "S" (offset width in feet) or as indicated on the plans. Minimum "D" = 100 feet urban, 200 feet rural.

APPROACH TO OBSTRUCTIONS

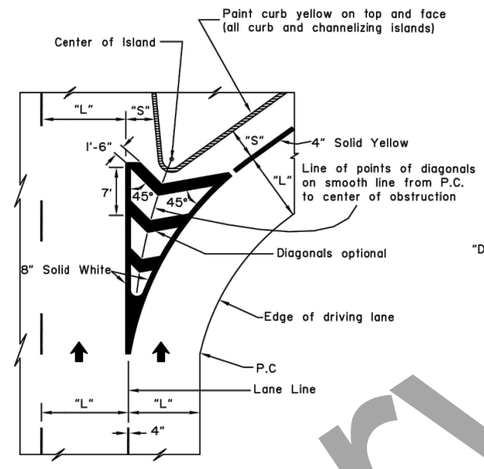

CHANNELIZING ISLAND

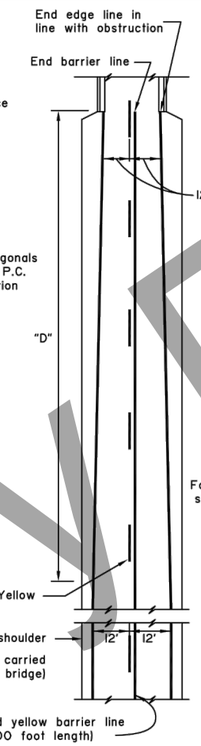

Note: On bridges over 24' wide use standard pavement markings. Barrier lines not used unless otherwise required.

EDGE LINE TRANSITION TO NARROW BRIDGE AND APPROACH BARRIER LINE

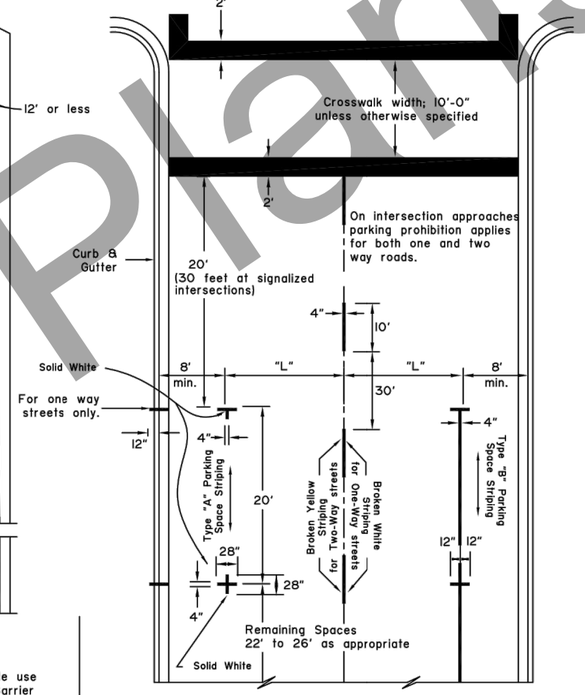

CENTERLINES FOR TWO LANE TWO WAY URBAN ROADS-PARKING LIMIT LINES

RAILROAD CROSSING NOTES:

1. All markings solid while unless indicated otherwise.
2. On 4-lane roadways place railroad crossing approach markings in each lane of the approach.
3. Locate Stop Bar 15' from railroad track or 8' from gate, if present.
4. Place edge lines and lane lines on a uni-directional approach in a normal manner except that the lane line(s) shall be solid 4" white in lieu of broken for a distance of (D+60') in advance of the stop bands.

POSTED LIMIT	D
30 M.P.H.	225'
40	350'
50	475'
60	625'

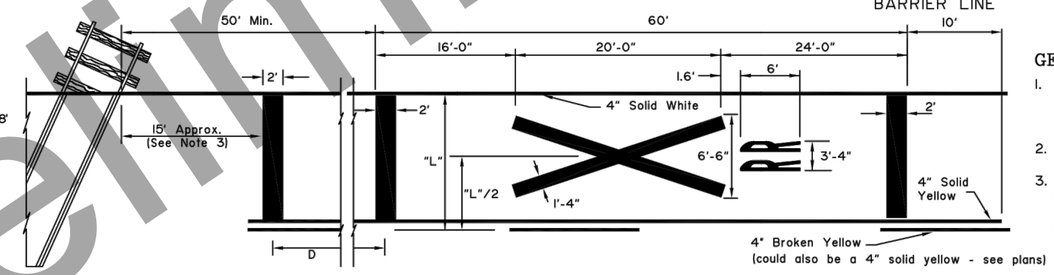

APPROACH TO RAILROAD CROSSING ON 2 LANE 2 WAY HIGHWAY

GENERAL NOTES:

1. "S"= offset distance as shown on the plans, otherwise 1 to 2 feet.
2. "L"= driving lane width.
3. See the Alaska Traffic Manual for additional guidance and/or restrictions on the use of traffic control devices.

NOT TO SCALE

State of Alaska DOT&PF
ALASKA STANDARD PLAN

PAVEMENT MAKING APPLICATIONS

Adopted as an Alaska Standard Plan by: Kenneth J. Fisher, P.E.
Chief Engineer

Adoption Date: 02/08/2019

Last Code and Stds. Review
By: Date:
Next Code and Standards Review date: 02/08/2029

T-20.04

Preliminary Plans

STANDARD PLAN T-20.04

PLANS DEVELOPED BY: STATE OF ALASKA DEPARTMENT OF TRANSPORTATION & PUBLIC FACILITIES, NORTHERN REGION, 2301 PEGER ROAD, FAIRBANKS, AK 99709 (907)451-2200
C:\Users\Ubergstrom\Desktop\Home Work Home\Home Work\03 Drafting\std V dwgs\T-20 04_NR-STANDARD PLAN T-20.04 Fri, Aug/07/20 03:01pm

STATE	PROJECT DESIGNATION	YEAR	SHEET NO.	TOTAL SHEETS
ALASKA	PENDING/NFHWY00355	2020	V16	V16

T-21.04

SHEET 1 of 1

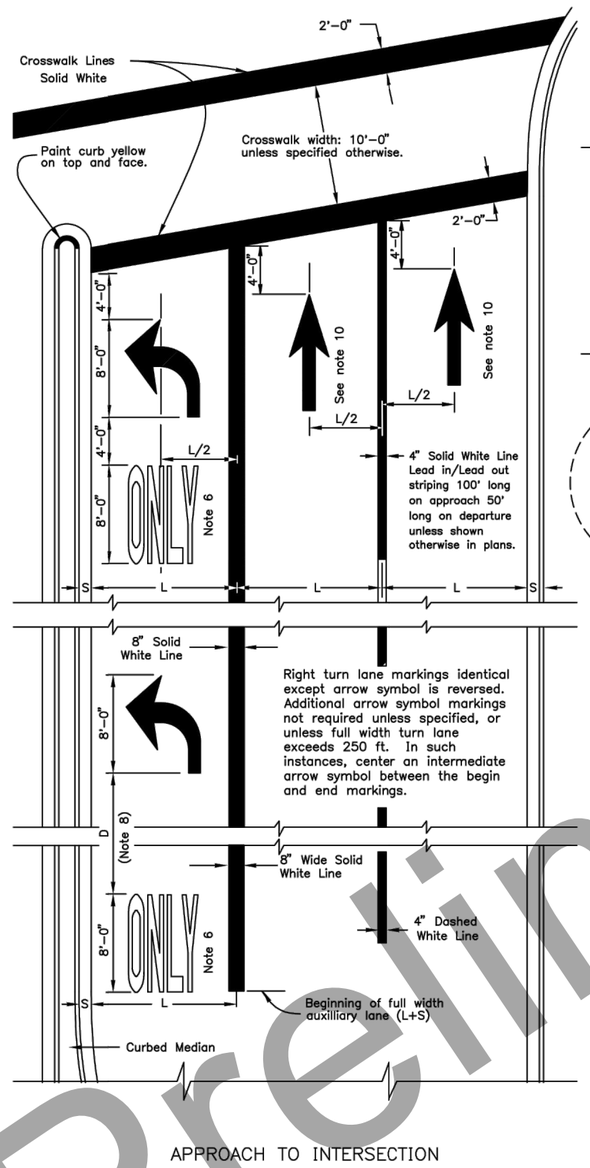

APPROACH TO INTERSECTION

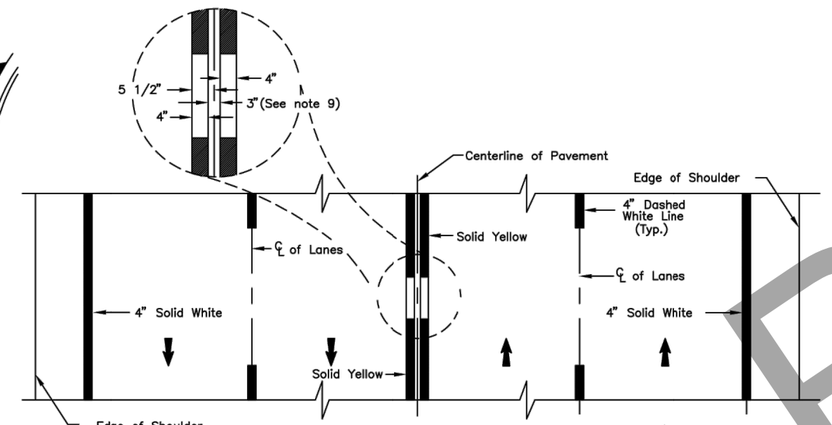

FOUR LANE TWO WAY

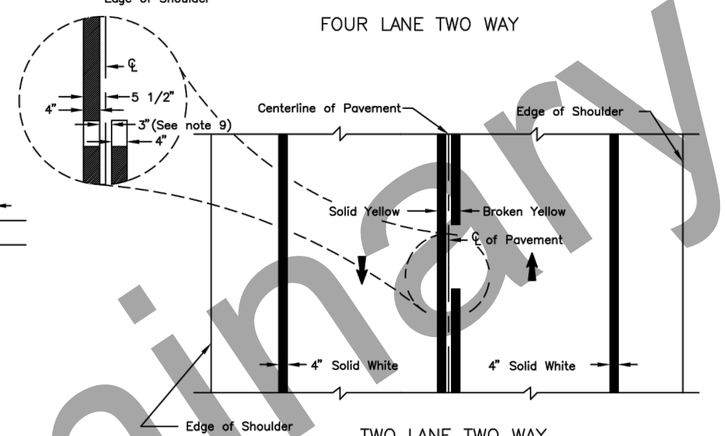

TWO LANE TWO WAY

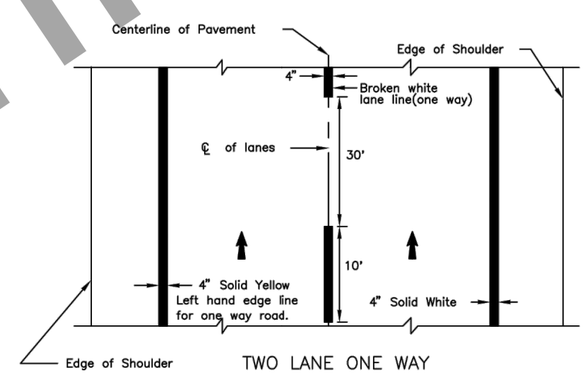

TWO LANE ONE WAY

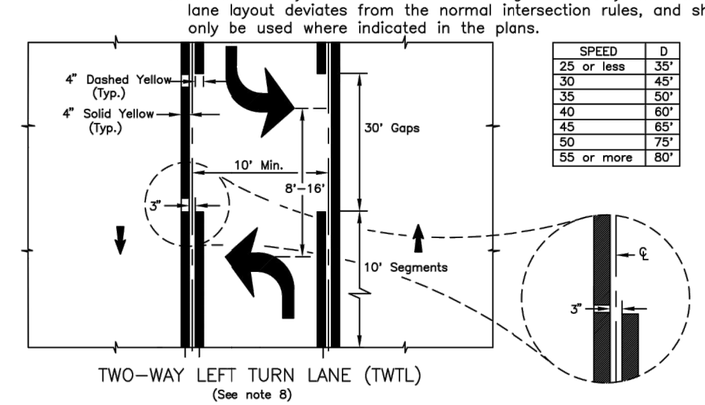

TWO-WAY LEFT TURN LANE (TWTL)
(See note 8)

SPEED	D
25 or less	35'
30	45'
35	50'
40	60'
45	65'
50	75'
55 or more	80'

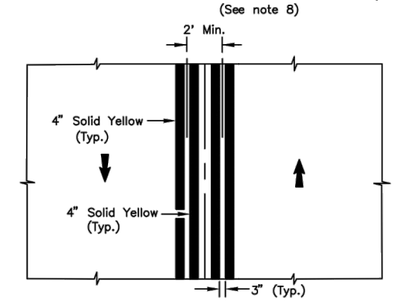

STRIPED MEDIAN

GENERAL NOTES:

1. All markings white unless indicated otherwise.
2. Lengths of stripe and gap for lane and center lines identical.
3. Lane lines for auxiliary lanes are unbroken solid lines.
4. "L" = driving lane width.
5. "S" = shy distance as shown on plans, otherwise 1 to 2 feet.
6. ONLY markings are required where through lanes change to turn lanes. In other cases, apply ONLY markings as indicated on plans.
7. See ALASKA TRAFFIC MANUAL for additional instruction on the use of TRAFFIC CONTROL DEVICES.
8. Adjust distance D between ONLY and Turn Arrow based on SPEED vs. D table. Table may be used for spacing between pairs of TWLT markings.
9. Adjust centerline spacing from 3" up to 5" where recessed pavement markers are required.
10. Arrows and symbols are used for through lanes only when the lane layout deviates from the normal intersection rules, and shall only be used where indicated in the plans.

State of Alaska DOT&PF
ALASKA STANDARD PLAN

PAVEMENT MARKING APPLICATIONS

Adopted as an Alaska Standard Plan by: Carolyn Morehouse
Carolyn Morehouse, P.E.
Chief Engineer

Adoption Date: 7/17/2020

Last Code and Stds. Review
By: KLK Date: 7/8/2020

Next Code and Standards Review Date: 7/8/2030

T-21.04

Preliminary Plans

STANDARD PLAN T-21.04

PLANS DEVELOPED BY: STATE OF ALASKA DEPARTMENT OF TRANSPORTATION & PUBLIC FACILITIES, NORTHERN REGION, 2301 PEGER ROAD, FAIRBANKS, AK 99709 (907)451-2200
H:\projects\rich_hwy\60638_rich_115_148\06 design\05 civil 3d\03_90265 137-148\03 Drafting\std V dwgs\T2103_NR-STANDARD PLAN T-21.04 Mon, Oct/12/20 02:31pm