STATE	PROJECT DESIGNATION	YEAR	SHEET NO.	TOTAL SHEETS
ALASKA	Z621710000 / 0002163	2020	A1	41
CDS ROUTE: 161653	MILEPOINT: 0.2256 TO 2.1656			

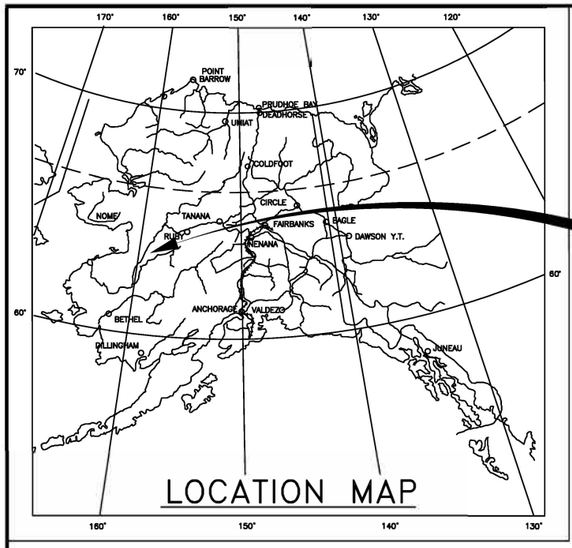

PROJECT LOCATION

STATE OF ALASKA
DEPARTMENT OF TRANSPORTATION
&
PUBLIC FACILITIES

PROPOSED HIGHWAY PROJECT

Z621710000 / 0002163

SHAGELUK AIRPORT ACCESS ROAD IMPROVEMENTS

EROSION PROTECTION, MINOR REALIGNMENT, & RESURFACING

INDEX OF SHEETS	
SHEET NO.	DESCRIPTION
A1	TITLE SHEET
A2	LEGEND
A3	SURVEY CONTROL
B1	TYPICAL SECTIONS
C1	ESTIMATE OF QUANTITIES & GENERAL NOTES
D1	SUMMARY TABLES
E1–E2	CULVERT SUMMARY & DETAILS
F1–F5	PLAN & PROFILE
G1	APPROACH DETAILS & SUMMARY
H1	SIGN SUMMARY & DETAILS
P1	ICE ROAD & MATERIAL SITE DETAILS
Q1–Q4	EROSION SEDIMENT CONTROL PLANS
S1	STAGING AREA
T1	TRAFFIC CONTROL
U1–U10	UTILITY PLANS
V1–V9	STANDARD DRAWINGS

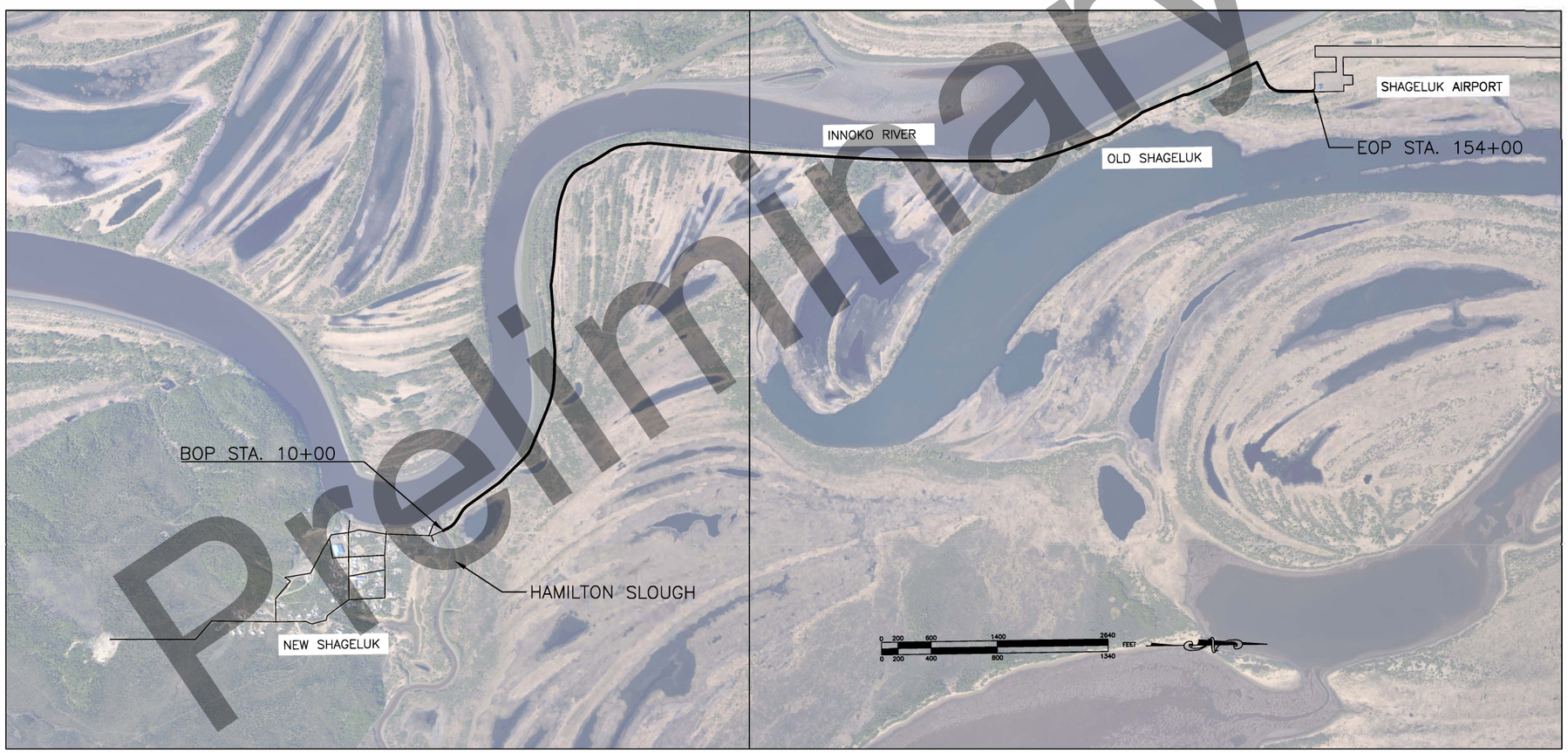

VICINITY MAP

DESIGN DESIGNATIONS	
ADT (2014)	<250
ADT (2030)	<250
DHV (2014)	NONE
PERCENT TRUCKS (T)	<10%
DIRECTIONAL SPLIT (D)	N/A
DESIGN SPEED (V)	25 mph
DESIGN EAL'S (15 YEARS)	N/A

PROJECT SUMMARY	
WIDTH OF ROAD (FT)	14–18
LENGTH OF GRADING (FT)	16,460
LENGTH OF PAVING (FT)	0
LENGTH OF PROJECT (FT)	16,460

CHRISTOPHER F. JOHNSTON, P.E., ENGINEERING MANAGER
CRISTINA DeMATTIO, P.E., DESIGN ENGINEER

STATE OF ALASKA
DEPARTMENT OF TRANSPORTATION
&
PUBLIC FACILITIES

APPROVED BY:

_____ DATE _____

Sarah E. Schacher, P.E.
Preconstruction Engineer, Northern Region

ACCEPTED FOR CONSTRUCTION:

_____ DATE _____

Ryan F. Anderson, P.E.
Reg nio al D ctor, N thern R gio

Preliminary Plans

C:\Users\cmdemattio\Desktop\62171_ShagelukAptRd\04 PS&E\04 Plans\Review Plan Set\62171_A_Title-Cover Sheet Fri May/22/20 11:10am

STATE	PROJECT DESIGNATION	YEAR	SHEET NO.	TOTAL SHEETS
ALASKA	Z621710000 / 0002163	2020	A2	A3

	RECOVERED	SET
BLM MONUMENT		
GLO MONUMENT		
USC&GS MONUMENT		
PRIMARY MONUMENT		
CENTERLINE MONUMENT IN CASING		
PRIMARY R.O.W. MONUMENT		
BEARING OBJECT		
MISCELLANEOUS MONUMENT		
LINE OF SIGHT MONUMENT		
CONCRETE R.O.W. MONUMENT		
BENCHMARK		BM
REBAR AND CAP		
REBAR		
IRON PIPE		
PK NAIL		
SPIKE		
HUB AND TACK		
CONSTRUCTION CENTERLINE	5+00	
MICELLANEOUS CENTERLINE	10+00	
STATION EQUATION	"L"48+97.23 POT BK= "O"48+97.23 PC AHD	
PROJECT RIGHT-OF-WAY LINE	R/W	
EXISTING RIGHT-OF-WAY LINE		
EXISTING PROPERTY LINE		
CONTROLLED ACCESS LINE	C/A	
EXISTING EASEMENT LINE		
PROPOSED EASEMENT LINE		
PROPOSED CUT SLOPE LIMIT		
PROPOSED FILL SLOPE LIMIT		
SECTION LINE		
1/4 SECTION LINE		
1/16 SECTION LINE		
TOWNSHIP & RANGE LINE	T. 2 N. / T. 1 N. / T. 1 E. / T. 2 E.	
MEANDER LINE	M1 M2 M3	

	EXISTING	PROPOSED
SANITARY SEWER (FLOW DIRECTION →)	SS	SS
FUEL LINE	O	O
GAS LINE	G	G
WATER LINE	W	W
METER, VALVE, FIRE HYDRANT	W	W
EXISTING STORM DRAIN (FLOW DIRECTION →)	SD	
PROPOSED STORM DRAIN		S-10, SD, P-10, S-11, MH, P-11
FIBER OPTIC LINE	FO	
DIRECT BURIAL TELEPHONE CABLE	T	T
DIRECT BURIAL ELECTRIC CABLE	E	E
ELECTRIC LINE (OVERHEAD)		
POWER POLE LINE		
JOINT USE POWER & TELEPHONE		
TELEPHONE POLE LINE		
POLE ANCHOR		
STUB POLE (POWER OR TELEPHONE)		
TELEPHONE DUCT	T	T
TELEPHONE PEDESTAL		
BURIED CABLE MARKER		
PIPELINE MARKER OR VALVE		
CATCH BASIN OR DROP INLET		
MANHOLE	MH	MH
SANITARY SEWER CLEAN OUT		

	EXISTING	PROPOSED
ROADWAY/PAVEMENT EDGE		
FENCE	X	X
CURB AND GUTTER		
DETECTABLE WARNINGS		
GUARDRAIL		
CULVERT PIPE		
SIGN		
MAILBOX	MB	MB
RAILROAD TRACKS		
RAILROAD DEVICES	CROSS-BUCK, FLASHING LIGHT	CANTILEVER, SWITCH
TREE LINE		
WATER BOUNDARY		
ORDINARY HIGH WATER LINE		
FLOW CENTERLINE		
FLOW DIRECTION		
WETLANDS		
EXISTING BUILDINGS	H	
POST OR BOLLARD		
WELL OR MONITORING WELL	W	MW
SEPTIC PIPE	S	
FUEL TANK FILL PIPE/VENT	P	
SATELLITE DISH	SAT. DISH	
TEST HOLE	TH	
CONIFER TREE		
DECIDUOUS TREE		
GRAVE		
THERMOSIPHON		
PARKING METER		
VEHICLE PLUG-IN		
DELINEATOR/GUIDE MARKER		

H = HOUSE
G = GARAGE
M = MERCHANT/STORE
B = BARN
S = SHED
P = PRIVY
SS= SERVICE STATION
W = WAREHOUSE

	EXISTING	PROPOSED
JUNCTION BOX, TYPE IA		5
JUNCTION BOX, TYPE II		6
JUNCTION BOX, TYPE III		3
SIGNAL FACE, VEHICULAR	42	42
SIGNAL FACE, BACKPLATE	42	42
SIGNAL FACE, LEFT TURN, BACKPLATE	43	43
SIGNAL FACE, PEDESTRIAN	48	48
LOOP DETECTOR	33	73
VIDEO DETECTOR	2	2
RADAR DETECTOR	4	4A
OPTICOM DETECTOR	1	1
PEDESTRIAN PUSH BUTTON	1	1
SIGNAL POST W/O MAST ARM		1
SIGNAL POLE W/MAST ARM		4
SIGNAL CONTROLLER		
LOAD CENTER		
LUMINAIRE		22
RIGID METAL CONDUIT		

ABBREVIATIONS

LEGEND

Preliminary Plans

PLANS DEVELOPED BY: STATE OF ALASKA DEPARTMENT OF TRANSPORTATION & PUBLIC FACILITIES, NORTHERN REGION, 2301 PEGER ROAD, FAIRBANKS, AK 99709 (907)451-2200
C:\Users\cmdermatto\Desktop\62171_ShogelukAptRd\04 PS&E\04 Plans\Review Plan Set\62171_A_Title-A2 - Legend Fri, May/22/20 11:10am

STATE	PROJECT DESIGNATION	YEAR	SHEET NO.	TOTAL SHEETS
ALASKA	Z621710000 / 0002163	2020	B1	B1

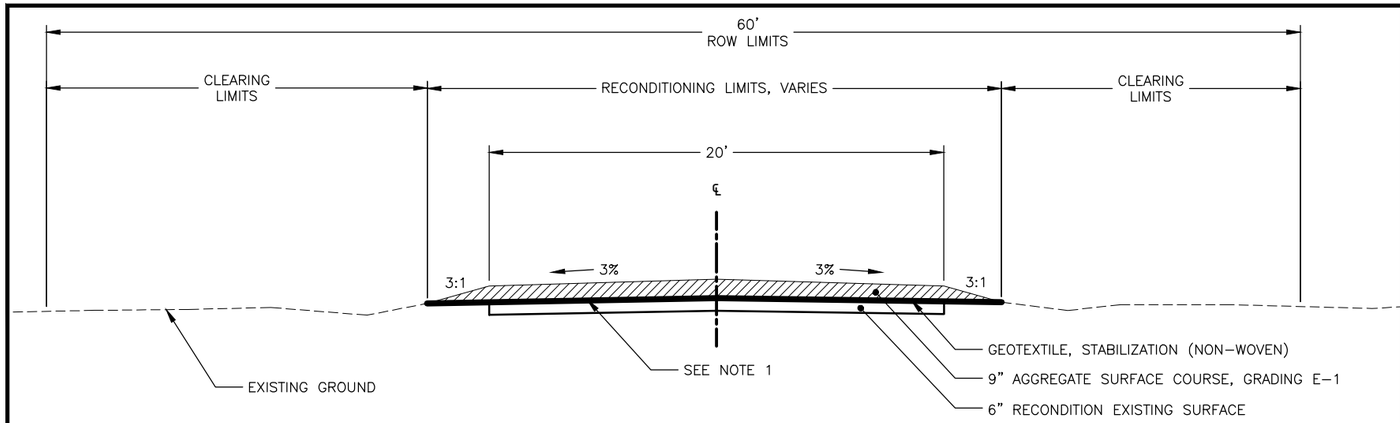

TYPICAL SECTION 1: RESURFACING

STA. "O" 16+50 TO "O" 81+00
STA. "O" 94+00 TO "O" 113+50
STA. "O" 135+75 TO "O" 145+00

NOTES:

1. SCARIFY THE EXISTING ROAD SURFACE PER SECTION 303 TO A TOTAL DEPTH OF 6-INCHES. REGRADE THE SURFACE TO THE TYPICAL SECTION CROSS SLOPES PRIOR TO ADDING THE 9-INCHES OF SURFACE COURSE.
2. COMPACT AGGREGATE SURFACE COURSE AND SELECTED MATERIAL, TYPE A PER SECTION 203-3.04.
3. SEED ALL ERODIBLE DISTURBED AREAS IN ACCORDANCE WITH SECTION 618, EXCEPT WHERE DITCH LINING OR RIPRAP ARE INSTALLED.
4. STOCKPILE UNSUITABLE MATERIAL, INCLUDING ORGANICS AND OVERBURDEN, APPROVED TO BE USED AS TOPSOIL BY THE ENGINGEER. THIS MAY REQUIRE MULTIPLE HANDLING. ALL WORK AND MATERIALS REQUIRED TO STOCKPILE AND RE-HANDLE ARE SUBSIDIARY TO PAY ITEM 618(1). SPREAD MATERIAL TO 4-INCH THICKNESS PRIOR TO PERMANENT SEEDING UNDER SECTION 618. MATERIAL MAY BE STOCKPILED ADJACENT TO THE PROPOSED ROADWAY AS LONG AS IT DOES NOT IMPEDE DRAINAGE OR ACCESS, IS NOT IN A WETLAND, AND IS WITHIN THE PROJECT LIMITS.
5. ANY UNSUITABLE MATERIAL THAT IS NOT USED ON THE PROJECT BECOMES PROPERTY OF THE CONTRACTOR AND IS THE CONTRACTORS RESPONSIBILITY TO REMOVE FROM THE PROJECT AREA.
6. EXCAVATE PERIODIC DITCHES IN THE OLD EMBANKMENT TO AVOID PONDING. LOCATION OF THE DITCHES WILL BE DETERMINED BY THE ENGINEER.
7. PROOF ROLL LEVELING COURSE PRIOR TO PLACING GEOTEXTILE.

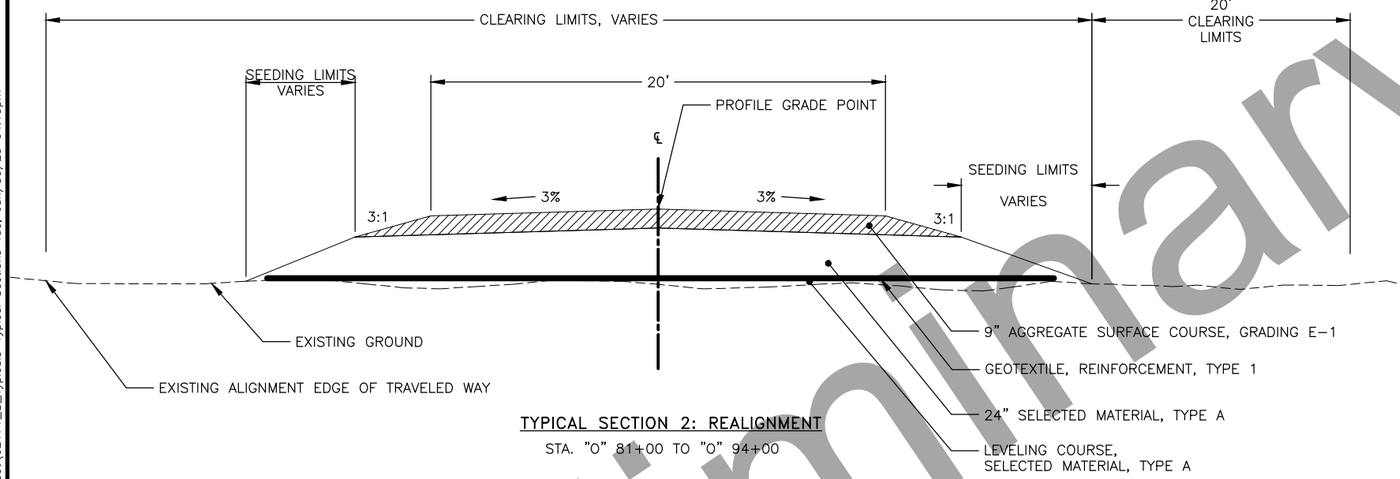

TYPICAL SECTION 2: REALIGNMENT

STA. "O" 81+00 TO "O" 94+00

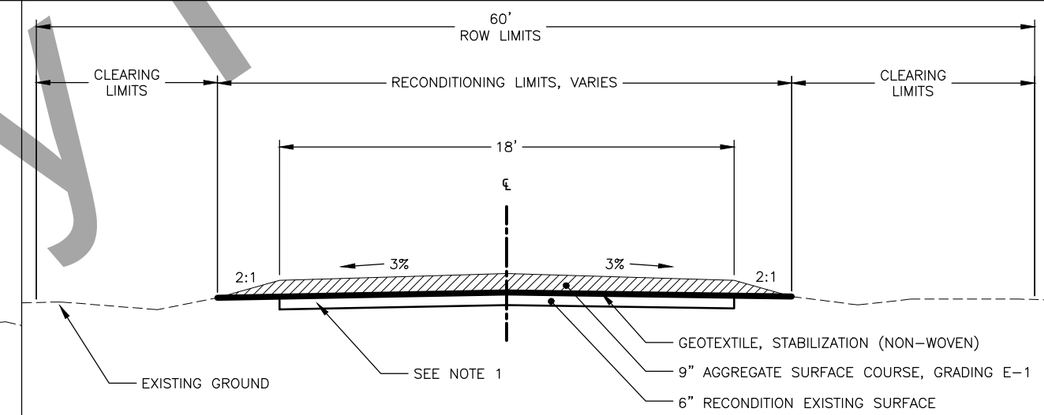

TYPICAL SECTION 3: RESURFACING TRANSITION

STA. "O" 10+60 TO "O" 16+50
STA. "O" 145+00 TO "O" 154+00

*NOTE: TAPER INTO EXISTING GRADE AT STA. 10+60 AND AT EOP.

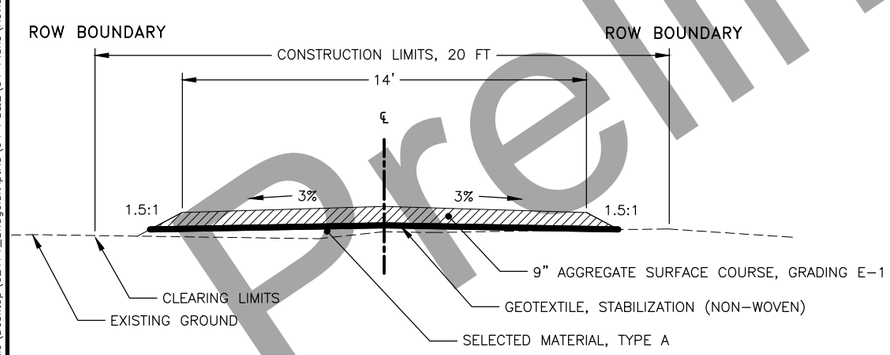

TYPICAL SECTION 4: OLD TOWN RESURFACING

STA. "O" 113+50 TO "O" 129+45

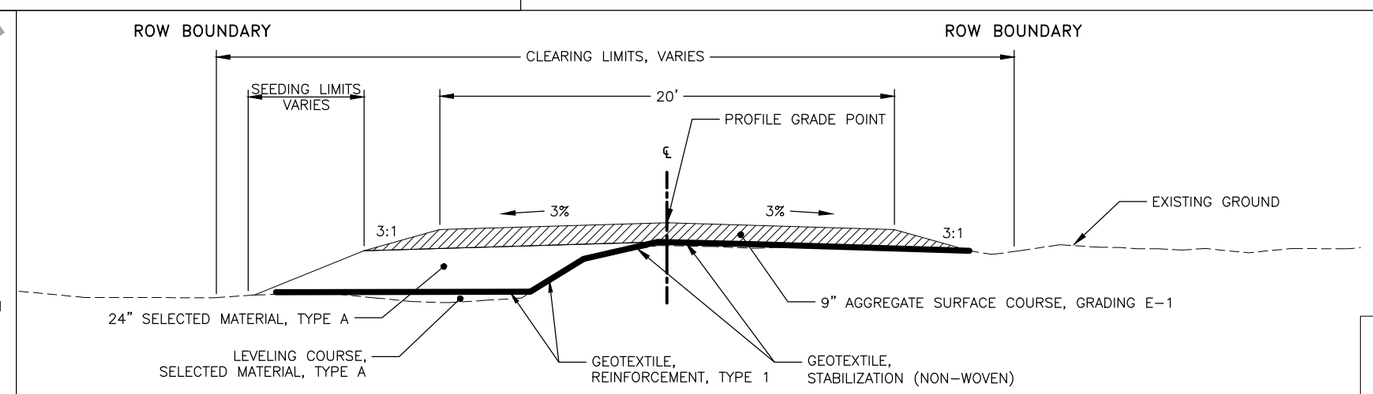

TYPICAL SECTION 5: OLD TOWN REALIGNMENT

STA. "O" 129+45 TO "O" 135+75

TYPICAL SECTIONS

Preliminary Plans

PLANS DEVELOPED BY: STATE OF ALASKA DEPARTMENT OF TRANSPORTATION & PUBLIC FACILITIES, NORTHERN REGION, 2301 PEGER ROAD, FAIRBANKS, AK 99709 (907)451-2200
C:\Users\cmdematio\Desktop\62171_Shageluk&pIRO\04 PS&E\04 Plans\Review Plan Set\62171_B_Typicals-Typical Sections Tue, Jun/30/20 04:13pm

STATE	PROJECT DESIGNATION	YEAR	SHEET NO.	TOTAL SHEETS
ALASKA	Z621710000 / 0002163	2020	C1	C1

ESTIMATE OF QUANTITIES

ITEM NUMBER	SSHC 2017 ITEM NUMBER	PAY ITEM	PAY UNIT	QUANTITY
201.0001.0000	201(1A)	CLEARING	ACRE	14.41
202.0004.0000	202(4)	REMOVAL OF CULVERT PIPE	LINEAR FOOT	158
203.0003.0000	203(3)	UNCLASSIFIED EXCAVATION	CUBIC YARD	12,640
203.0005.000A	203(5)	BORROW, TYPE A	CUBIC YARD	12,640
203.0009.0000	203(9)	OBLITERATION OF ROADWAY	SQUARE YARD	1,600
301.0004.00E1	301(4)	AGGREGATE SURFACE COURSE, GRADING E-1	CUBIC YARD	8,615
303.0001.0000	303(1)	RECONDITIONING	STATION	108.15
603.0001.0024	603(1)-24	CSP 24 INCH	LINEAR FOOT	146
613.0002.0000	613(2)	CULVERT MARKER POST	EACH	4
615.0001.0000	615(1)	STANDARD SIGN	SQUARE FOOT	7.5
618.0001.0000	618(1)	SEEDING	ACRE	1
630.0002.0001	630(2)	GEOTEXTILE, STABILIZATION, CLASS 1	SQUARE YARD	30,260
630.0003.0001	630(3A)	GEOTEXTILE, REINFORCEMENT – TYPE 1	SQUARE YARD	4,170
639.2000.00A0	639(2)	APPROACH, PUBLIC	EACH	4
640.0001.0000	640(1)	MOBILIZATION AND DEMOBILIZATION	LUMP SUM	ALL REQUIRED
640.0004.0000	640(4)	WORKER MEALS AND LODGING, OR PER DIEM	LUMP SUM	ALL REQUIRED
641.0001.0000	641(1)	EROSION, SEDIMENT AND POLLUTION CONTROL ADMINISTRATION	LUMP SUM	ALL REQUIRED
641.0003.0000	641(3)	TEMPORARY EROSION, SEDIMENT AND POLLUTION CONTROL	LUMP SUM	ALL REQUIRED
641.0004.0000	641(4)	TEMPORARY EROSION, SEDIMENT AND POLLUTION CONTROL ADDITIVES	CONTINGENT SUM	ALL REQUIRED
641.0006.0000	641(6)	WITHHOLDING	CONTINGENT SUM	ALL REQUIRED
641.0007.0000	641(7)	SWPPP MANAGER	LUMP SUM	ALL REQUIRED
642.0001.0000	642(1)	CONSTRUCTION SURVEYING	LUMP SUM	ALL REQUIRED
642.0013.0000	642(3A)	THREE PERSON SURVEY PARTY	CONTINGENT SUM	ALL REQUIRED
643.0002.0000	643(2)	TRAFFIC MAINTENANCE	LUMP SUM	ALL REQUIRED
643.0023.0000	643(23)	TRAFFIC PRICE ADJUSTMENT	CONTINGENT SUM	ALL REQUIRED
643.0025.0000	643(25)	TRAFFIC CONTROL	CONTINGENT SUM	ALL REQUIRED
643.2005.0000	643(101)	PUBLIC INFORMATION PROGRAM	LUMP SUM	ALL REQUIRED
644.0001.0000	644(1)	FIELD OFFICE	LUMP SUM	ALL REQUIRED
644.0002.0000	644(2)	FIELD LABORATORY	LUMP SUM	ALL REQUIRED
644.0006.0000	644(6)	VEHICLE	LUMP SUM	ALL REQUIRED
644.0015.0000	644(15)	NUCLEAR TESTING EQUIPMENT STORAGE SHED	EACH	1.00
644.0016.0000	644(16)	STORAGE CONTAINER	EACH	1.00
687.2000.0000	687(2)	POWER UTILITY RELOCATION	LUMP SUM	ALL REQUIRED

TABLE OF ESTIMATING FACTORS

ITEM NO.	DESCRIPTION	FACTOR
203(5)	BORROW, SELECTED MATERIAL, TYPE A	2 TONS/CUBIC YARD
301(3)	AGGREGATE SURFACE COURSE, GRADING E–1	2 TONS/CUBIC YARD
618(1)	SEEDING	1.85 LBS/1000 SF

UTILITY NOTES:

1. LOCATE ALL PROJECT UTILITIES PRIOR TO CONSTRUCTION. ALL UTILITIES WITHIN, UNDER, AND OVER THE PROJECT SHALL REMAIN IN PLACE AND IN SERVICE UNLESS RELOCATED BY THE UTILITY OWNER. THE PRESENCE AND LOCATION OF UTILITIES SHOWN ARE APPROXIMATE. THE CONTRACTOR IS RESPONSIBLE FOR VERIFYING THE PRESENCE AND LOCATION OF UTILITIES IN THE FIELD PRIOR TO PERFORMING ANY EARTH DISTURBING ACTIVITIES.

ABBREVIATIONS:

APPROX	APPROXIMATELY
BOP/BP	BEGINNING OF PROJECT
℄	CENTERLINE
CY	CUBIC YARD
E	EAST, EASTING
ELE/ELEV	ELEVATION
EOP/EP	END OF PROJECT
FT. '	FOOT, FEET
H	HORIZONTAL
IE	INVERT ELEVATION
IN, "	INCH, INCHES
L	LENGTH OF CURVE
LBS	POUNDS
L.C.L	LEFT OF CENTERLINE
LF	LINEAR FEET
LT	LEFT
LVC	LENGTH OF VERTICAL CURVE
MAX	MAXIMUM
MBM	THOUSAND BOARD FEET
MIN	MINIMUM
N	NORTH, NORTHING
NO.	NUMBER
NTS	NOT TO SCALE
O.C.	ON CENTER
PC	POINT OF CURVATURE
POT	POINT ON TANGENT
PST	PERFORATED STEEL TUBE
PT	POINT OF TANGENCY
PVI	POINT OF VERTICAL INTERSECTION
R	RADIUS
R.C.L	RIGHT OF CENTERLINE
RT	RIGHT
S	SOUTH
SF	SQUARE FOOT
SQ. FT.	SQUARE FOOT
STA	STATION
T	TANGENT
TCE	TEMPORARY CONSTRUCTION EASEMENT
TS	TUBE STEEL
TYP	TYPICAL
V	VERTICAL
VPC	VERTICAL POINT OF CURVATURE
VPI	VERTICAL POINT OF INTERSECTION
VPT	VERTICAL POINT OF TANGENCY
W	WEST
Ø	DIAMETER

Preliminary Plans

ESTIMATE OF QUANTITIES

PLANS DEVELOPED BY: STATE OF ALASKA DEPARTMENT OF TRANSPORTATION & PUBLIC FACILITIES, NORTHERN REGION, 2301 PEGER ROAD, FAIRBANKS, AK 99709 (907)451-2200
C:\Users\cmdernatto\Desktop\62177_SogeluAptRd\04 PS&E\04 Plans\Review Plan Set\62177_C_Estimates-Estimate of Quantities Fri, May/22/20 11:10am

NO.	DATE	REVISION

STATE	PROJECT DESIGNATION	YEAR	SHEET NO.	TOTAL SHEETS
ALASKA	Z621710000 / 0002163	2020	D1	D1

201(1A) CLEARING SUMMARY

BEGIN STATION	END STATION	OFFSET	201(1A) CLEARING (ACRES)	REMARKS
"O" 10+60	"O" 81+00	RT	3.26	TO ROW LIMITS
"O" 10+60	"O" 81+00	LT	3.26	TO ROW LIMITS
"O" 81+00	"O" 99+00	RT	1.49	FROM CL TO 20' BEYOND TOE OF SLOPE
"O" 81+00	"O" 99+00	LT	0.97	FROM CL TO TOE OF EXISTING ALIGNMENT
"O" 99+00	"O" 113+00	RT	0.62	20' FROM TOE OF SLOPE
"O" 113+00	"O" 129+45	LT	0.62	TO ROW LIMITS
"O" 113+00	"O" 129+45	RT	2.56	TO ROW LIMITS
"O" 129+45	"O" 135+75	LT	0.56	20' FROM TOE OF SLOPE
"O" 135+75	"O" 142+00	LT	0.15	TO ROW LIMITS
"O" 135+75	"O" 142+00	RT	0.19	TO ROW LIMITS
"O" 142+00	"O" 154+00	LT	0.33	20' FROM TOE OR SLOPE
"O" 142+00	"O" 154+00	RT	0.40	20' FROM TOE OF SLOPE
		TOTAL	14.41	

303(1) RECONDITIONING

BEGIN STATION	END STATION	LENGTH (FT)	LENGTH (STA)
"O" 10+60	"O" 81+00	7,040	70.4
"O" 94+00	"O" 113+50	1,950	19.5
"O" 135+75	"O" 154+00	1,825	18.25
		TOTAL	108.15

618(1) SEEDING SUMMARY

BEGIN STATION	END STATION	OFFSET	AREA (SY)	AREA (AC)	REMARKS
"O" 81+00	"O" 97+00	RT	1800	0.38	REALIGNMENT SIDE SLOPES
"O" 81+00	"O" 97+00	LT	1300	0.28	REALIGNMENT SIDE SLOPES
"O" 82+00	"O" 92+00		1600	0.34	AREA OF THE EXITING ALIGNMENT THAT REMAINS AFTER CONSTRUCTION OF REALIGNMENT.
		TOTAL	4,700	1.00	

GEOTEXTILE SUMMARY

BEGIN STATION	END STATION	630(3A) GEOTEXTILE, REINFORCEMENT, TYPE I (SY)	630(2) GEOTEXTILE, STABILIZATION, NON-WOVEN (SY)
"O" 10+60	"O" 81+00		17,210
"O" 81+00	"O" 94+00	3,470	
"O" 94+00	"O" 129+45		7,605
"O" 129+45	"O" 135+75	700	980
"O" 135+75	"O" 154+00		4,465
	TOTALS	4,170	30,260

Preliminary Plans

SUMMARY TABLES

PLANS DEVELOPED BY: STATE OF ALASKA DEPARTMENT OF TRANSPORTATION & PUBLIC FACILITIES, NORTHERN REGION, 2301 PEGER ROAD, FAIRBANKS, AK 99709 (907)451-2200
C:\Users\cmdermatto\Desktop\62171_ShagelukAptRA\04 PS&E\04 Plans\Review Plan Set\62171_D_Summary Tables-Summary Tables Fri, May/22/20 11:11am

NO.	DATE	REVISION

STATE	PROJECT DESIGNATION	YEAR	SHEET NO.	TOTAL SHEETS
ALASKA	Z621710000 / 0002163	2020	E1	E2

CULVERT SUMMARY

STATION	REMOVAL OF CULVERT PIPE		INLET			OUTLET			NEW CULVERT LENGTH (LF)	CULVERT MARKER POST
	DIAMETER (IN)	REMOVE (LF)	STATION	OFFSET	INVERT ELEVATION	STATION	OFFSET	INVERT ELEVATION	24"	
"0" 87+08	24	90	84+04.25	21.3 RT	71.5	87+11	56.4 LT	71.0	78	2
"0" 100+85	24	68	100+87	24.6 RT	69.0	100+82.4	43.2 LT	66.3	68	2
SUB-TOTALS		158							146	4

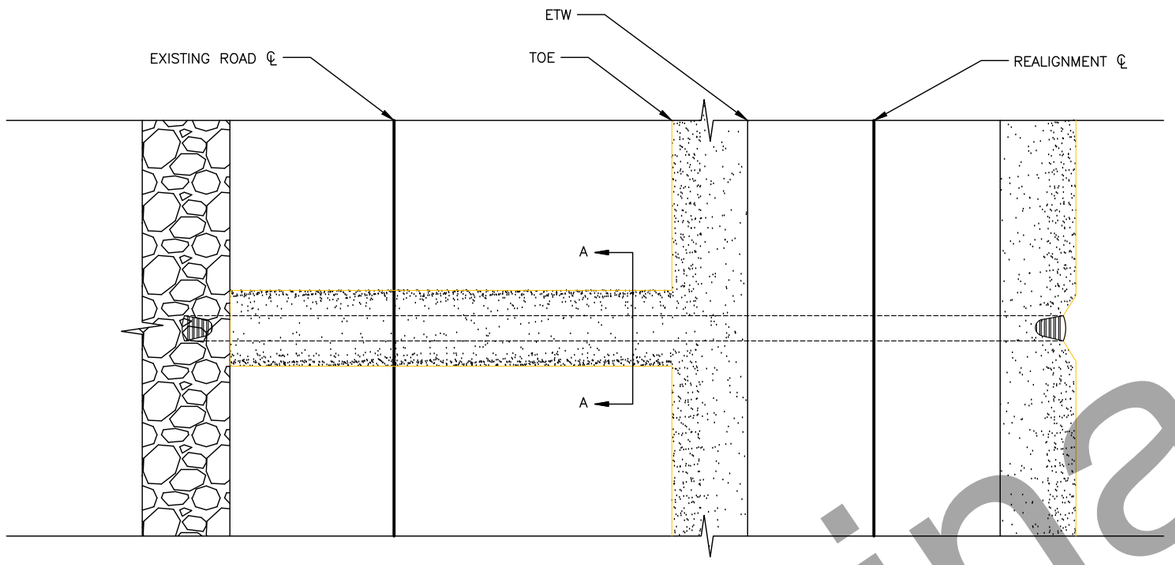

CULVERT 87+08 PLAN VIEW

GENERAL CULVERT NOTES:

1. FOLLOW MANUFACTURERS INSTALLATION SPECIFICATIONS IN ALL CULVERT INSTALLATIONS.
2. STATIONING AND SKEW FOR CULVERTS ARE APPROXIMATE. STAKE CULVERTS LOCATION FOR APPROVAL BY ENGINEER PRIOR TO CONSTRUCTION.
3. EXCAVATIONS ASSOCIATED WITH INSTALLING THE NEW CULVERT WILL BE SUBSIDIARY TO THE 603 SERIES PAY ITEMS.
4. INSTALL CULVERTS IN ACCORDANCE WITH THE CULVERT BEDDING DETAIL TYPE "A" FOUNDATION STABILIZATION ON STANDARD DRAWING D-01.02 1 FOOT BELOW INVERT.
5. MINIMUM ALLOWABLE CULVERT CROSS SLOPE IS 0.5%, UNLESS NOTED OTHERWISE ON THE PLANS.
6. ALL CULVERTS SHALL HAVE A MINIMUM CAMBER EQUAL TO 1% OF THE LENGTH OF THE PIPE, UNLESS THE PROJECT ENGINEER DIRECTS OTHERWISE.
7. NO CULVERT SHALL BE PLACED UNTIL THE BEDDING HAS BEEN APPROVED BY THE ENGINEER.
8. WHERE APRONS ARE NOT SPECIFIED, MINIMIZE DISTURBANCE TO THE VEGETATIVE MAT AROUND CULVERT ENDS, BUT CLEAR AND GRADE AS NEEDED TO ENSURE PROPER DRAINAGE. THIS WORK IS SUBSIDIARY TO 603 SERIES PAY ITEMS.
9. THE CONTRACTOR SHALL ENTER AS-BUILT LOCATIONS FOR ALL CULVERTS IN THE CULVERT SUMMARY TABLE. COORDINATES SHALL BE LOCATED AT THE INTERSECTION OF THE CULVERT AND ROAD CENTERLINE. USE NAD 83 DATUM FORMATTED TO DEGREES, MINUTES, SECONDS TO A PRECISION OF 2 DECIMAL PLACES (DDD° MM' SS.SS"). THIS WORK IS SUBSIDIARY TO 603 SERIES PAY ITEMS.
10. WARP EMBANKMENT SIDE SLOPES FROM VALUE SHOWN ON THE PROJECT TYPICAL SECTIONS TO THOSE SHOWN IN THE CULVERT PLANS OVER 100 FEET AS DIRECTED BY THE ENGINEER.

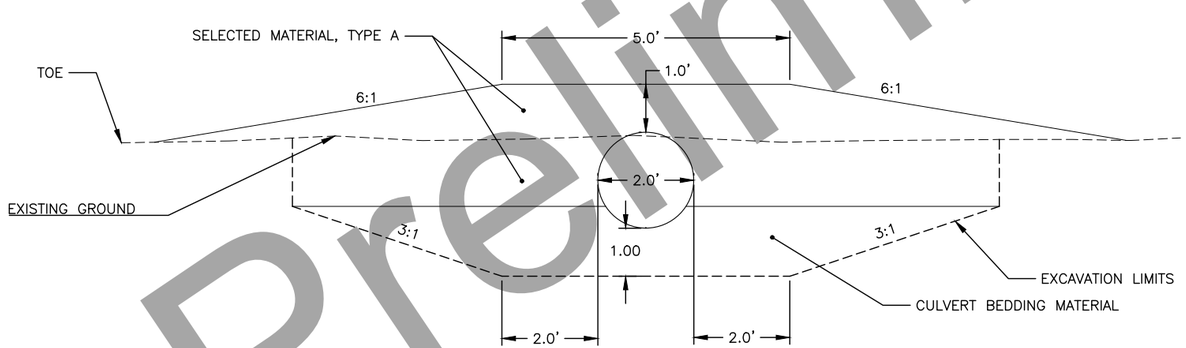

CULVERT OUTLET DRAINAGE

SECTION A-A

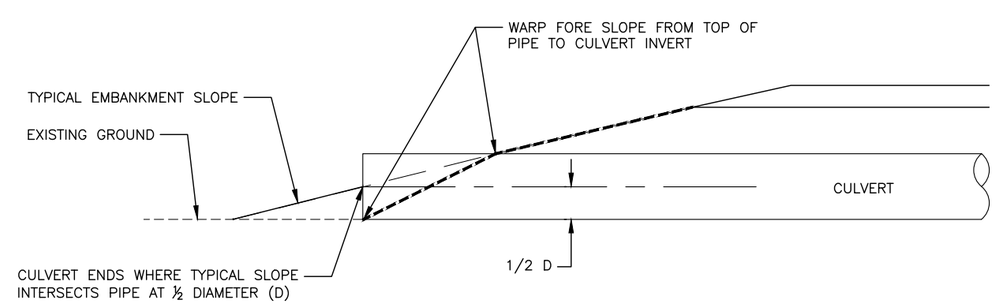

CULVERT SLOPE WARPING DETAIL
2:1 OR FLATTER SLOPES

CULVERT SUMMARY

Preliminary Plans

PLANS DEVELOPED BY: STATE OF ALASKA DEPARTMENT OF TRANSPORTATION & PUBLIC FACILITIES, NORTHERN REGION, 2301 PEGER ROAD, FAIRBANKS, AK 99709 (907)451-2200
C:\Users\cmdematio\Desktop\62171_ShageluAdpRd\04 PS&E\04 Plans\Review Plan Set\62171_E_Culvert_Sheets-E1 Culvert Details Fri, May/22/20 11:11am

NO.	DATE	REVISION

STATE	PROJECT DESIGNATION	YEAR	SHEET NO.	TOTAL SHEETS
ALASKA	Z621710000 / 0002163	2020	E2	E2

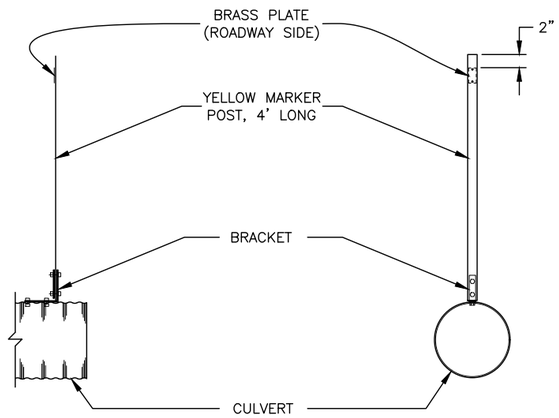

SIDE VIEW END VIEW

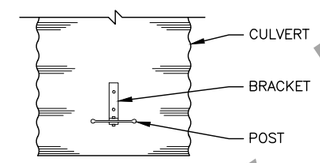

TOP VIEW

CULVERT MARKER POST DETAIL

CULVERT MARKER POSTS NOTES:

1. MARKER POSTS ARE TO BE INSTALLED ON CROSS CULVERTS ONLY.
2. IF CULVERTS ARE CLOSELY SPACED, MARK ONLY THE FIRST AND LAST CULVERT IN SERIES AS APPROVED BY THE ENGINEER.
3. DRILL ALL BOLT HOLES. COAT HOLES WITH ZINC RICH PAINT. FLAME CUTTING SHALL NOT BE PERMITTED.
4. GASKET MATERIAL SHALL BE PLACED BETWEEN DISSIMILAR METALS. GASKET MATERIAL SHALL BE APPROVED PRIOR TO INSTALLATION.
5. HOT DIP GALVANIZE FLAT STEEL TO MEET AASHTO M 111. GALVANIZE AFTER BENDING.

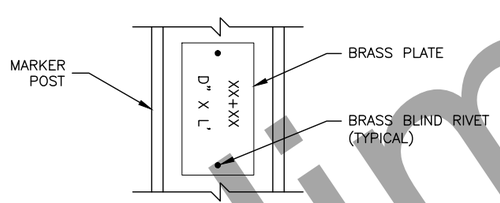

STAMP STATION AND PIPE SIZE, USING 3/8" HIGH MINIMUM LETTERS INTO A 2"X4"X 0.064" THICK BRASS PLATE. FASTEN PLATE TO THE SIDE FACING THE ROADWAY WITH TWO 1/8" BRASS BLIND RIVETS.

BRASS PLATE DETAIL

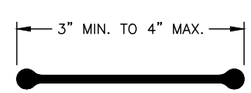

POST DETAIL
CROSS-SECTIONAL VIEW

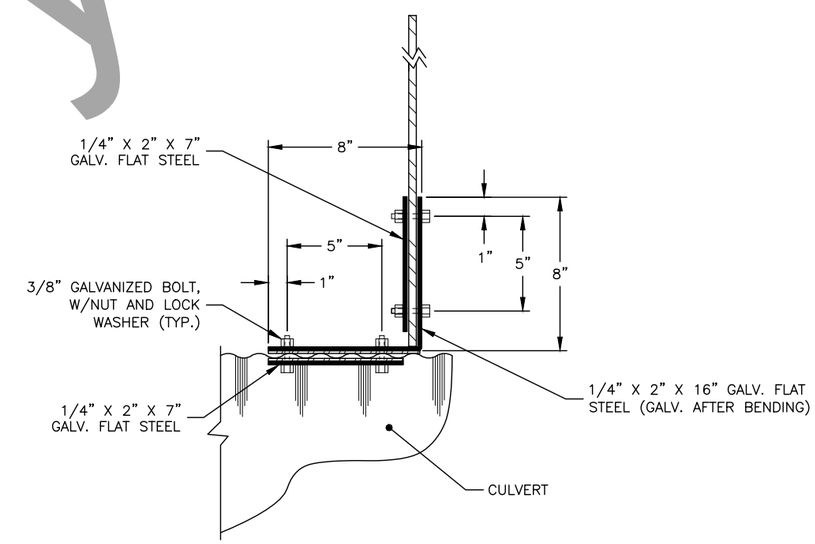

BRACKET DETAIL

CULVERT MARKER POST DETAILS

Preliminary Plans

CULVERT MARKER DETAILS

PLANS DEVELOPED BY: STATE OF ALASKA DEPARTMENT OF TRANSPORTATION & PUBLIC FACILITIES, NORTHERN REGION, 2301 PEGER ROAD, FAIRBANKS, AK 99709 (907)451-2200
C:\Users\cmdermatito\Desktop\62171_ShogeluxAptRG\04 PS&E\04 Plans\Review Plan Set\62171_E_Culvert_Sheets-E2 Culvert Marker Details Fri, May/22/20 11:11am

NO.	DATE	REVISION

STATE	PROJECT DESIGNATION	YEAR	SHEET NO.	TOTAL SHEETS
ALASKA	Z621710000 / 0002163	2020	F1	F5

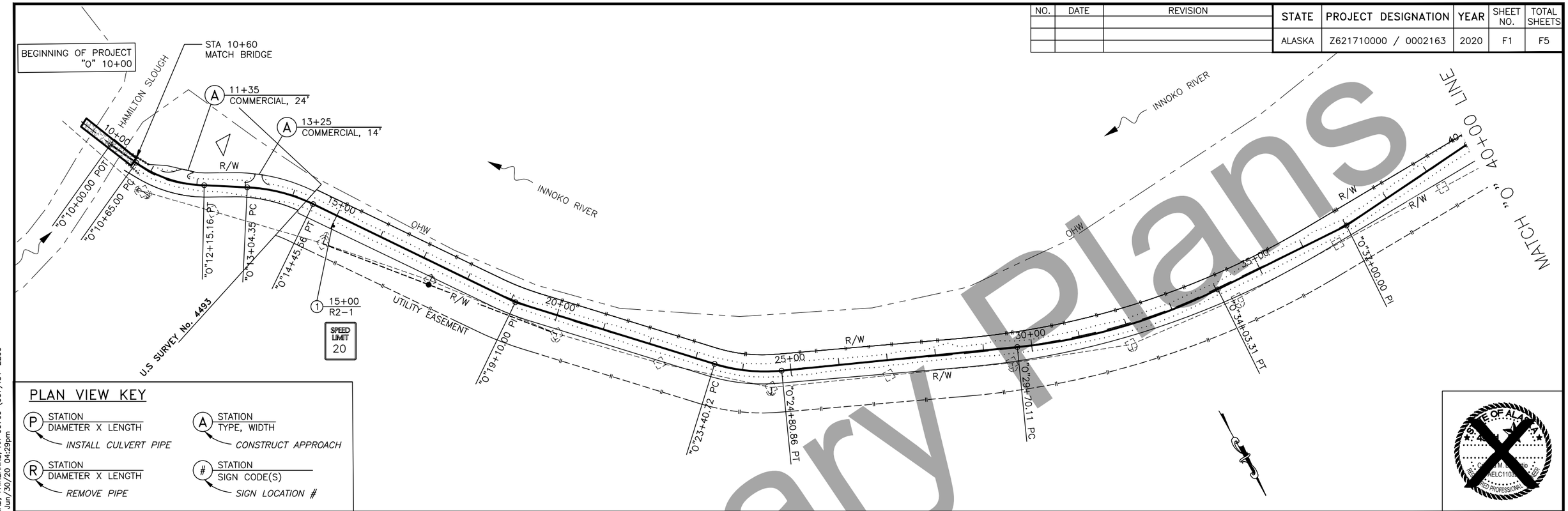

PLAN VIEW KEY

- (P) STATION / DIAMETER X LENGTH — *INSTALL CULVERT PIPE*
- (A) STATION / TYPE, WIDTH — *CONSTRUCT APPROACH*
- (R) STATION / DIAMETER X LENGTH — *REMOVE PIPE*
- (#) STATION / SIGN CODE(S) — *SIGN LOCATION #*

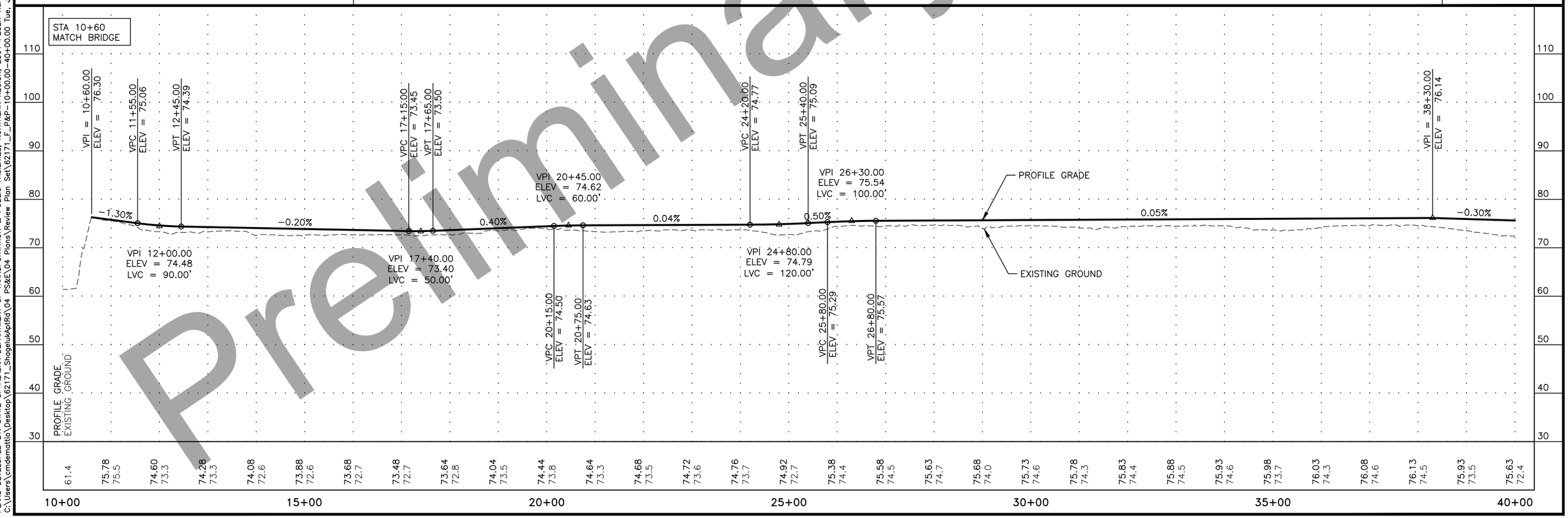

Preliminary Plans

PLANS DEVELOPED BY: STATE OF ALASKA DEPARTMENT OF TRANSPORTATION & PUBLIC FACILITIES, NORTHERN REGION, 2301 PEGER ROAD, FAIRBANKS, AK 99709 (907)451-2200
C:\Users\cmdematio\Desktop\62171_ShagelukAptRd\04 PS&E\04 Plans\Review Plan Set\62171_F_P&P-10+00.00-40+00.00 Tue, Jun/30/20 04:29pm

NO.	DATE	REVISION

STATE	PROJECT DESIGNATION	YEAR	SHEET NO.	TOTAL SHEETS
ALASKA	Z621710000 / 0002163	2020	F2	F5

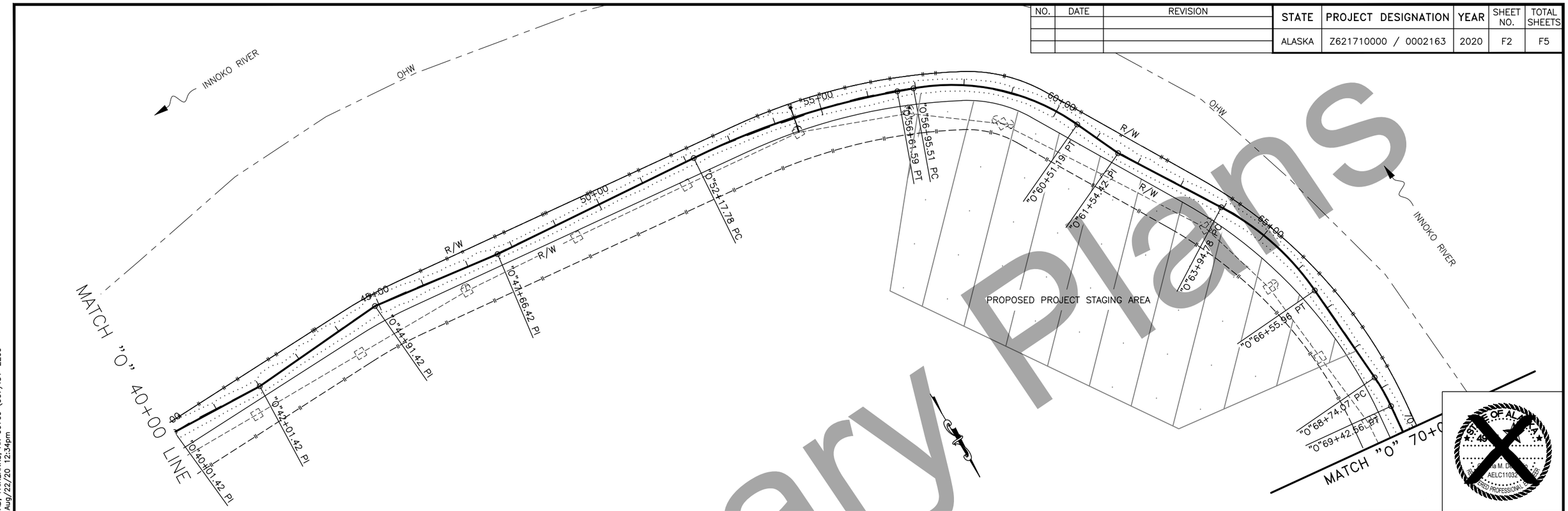

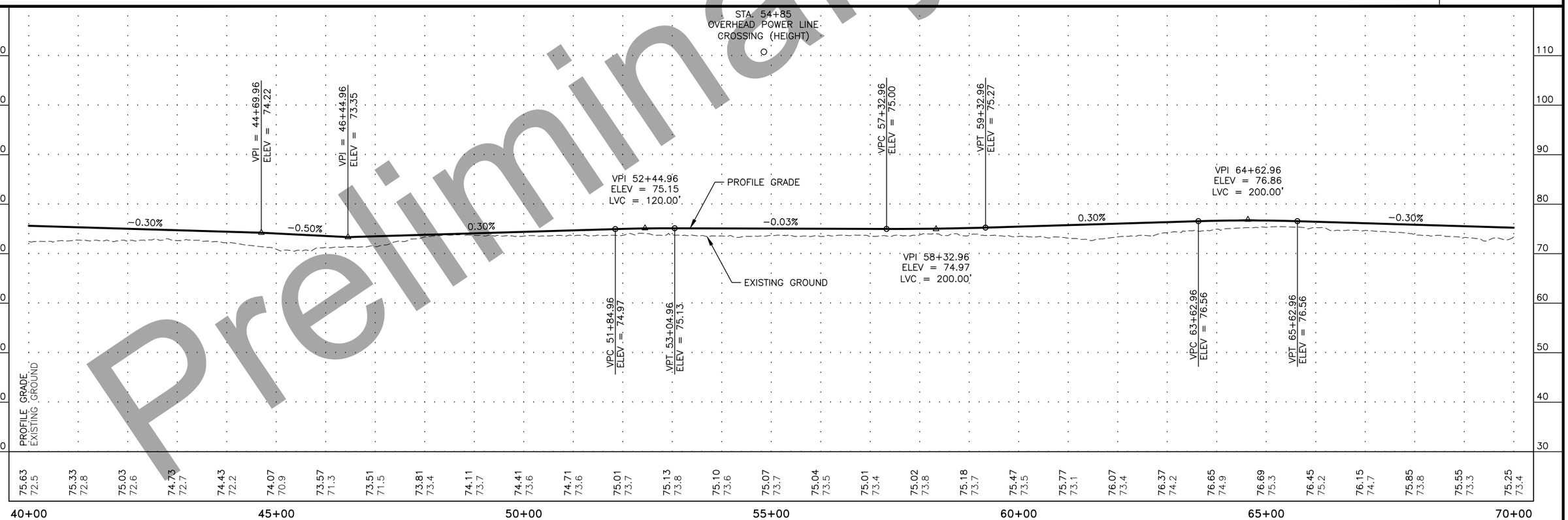

Preliminary Plans

PLANS DEVELOPED BY: STATE OF ALASKA DEPARTMENT OF TRANSPORTATION & PUBLIC FACILITIES, NORTHERN REGION, 2301 PEGER ROAD, FAIRBANKS, AK 99709 (907)451-2200
C:\Users\cmdenadtio\Desktop\62171_StageIIAptRD\04 PS&E\04 Plans\Review Plan Set\62171_F_P&P-40+00.00-70+00.00 Sat, Aug/22/20 12:34pm

NO.	DATE	REVISION

STATE	PROJECT DESIGNATION	YEAR	SHEET NO.	TOTAL SHEETS
ALASKA	Z621710000 / 0002163	2020	F3	F5

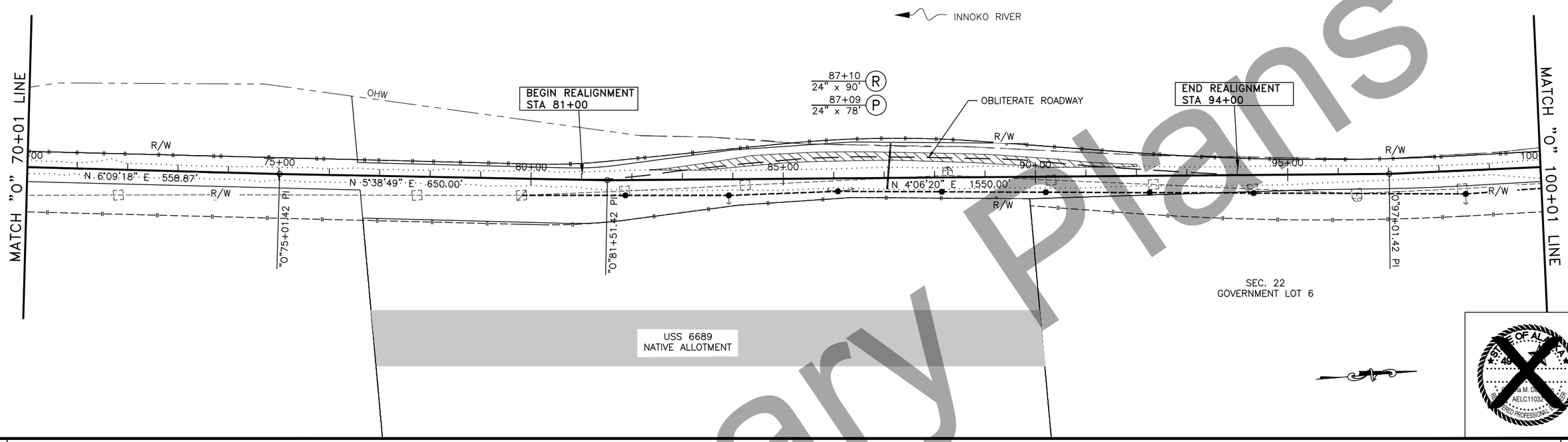

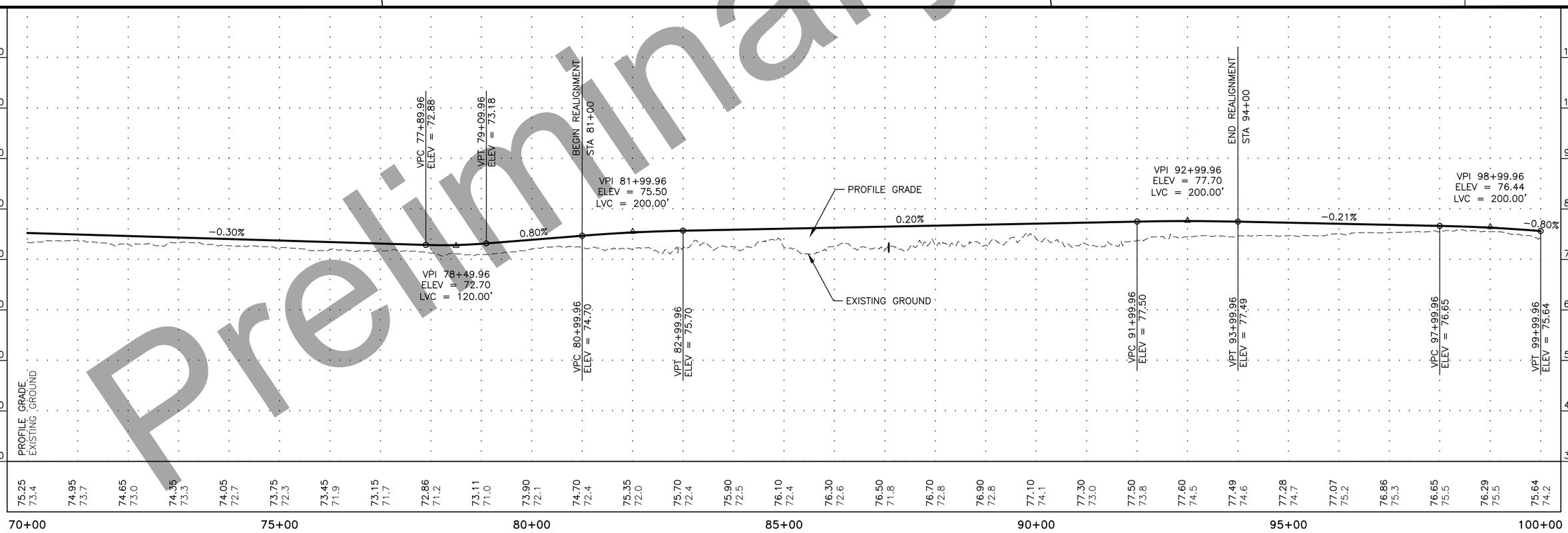

Preliminary Plans

PLANS DEVELOPED BY: STATE OF ALASKA DEPARTMENT OF TRANSPORTATION & PUBLIC FACILITIES, NORTHERN REGION, 2301 PEGER ROAD, FAIRBANKS, AK 99709 (907)451-2200
C:\Users\cmdematio\Desktop\62171_ShogelukpiRA\04 PS&E\04 Plans\Review Plan Set\62171_F_P&P-70+00.00-100+00.00 Sat, Aug/22/20 12:41pm

NO.	DATE	REVISION

STATE	PROJECT DESIGNATION	YEAR	SHEET NO.	TOTAL SHEETS
ALASKA	Z621710000 / 0002163	2020	F4	F5

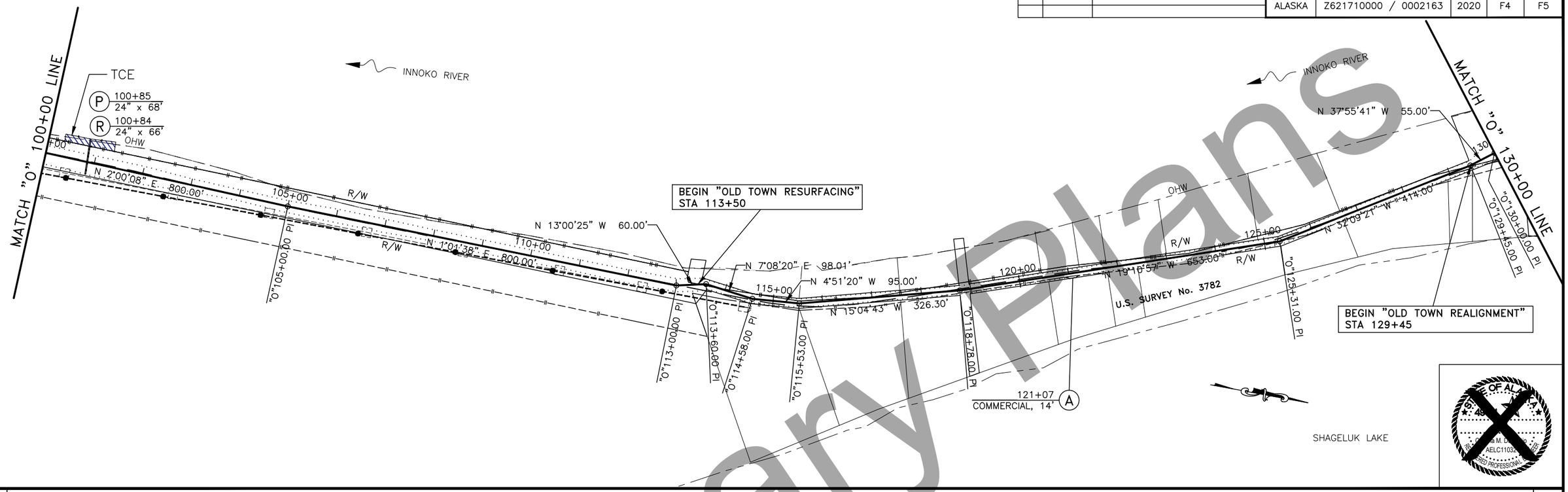

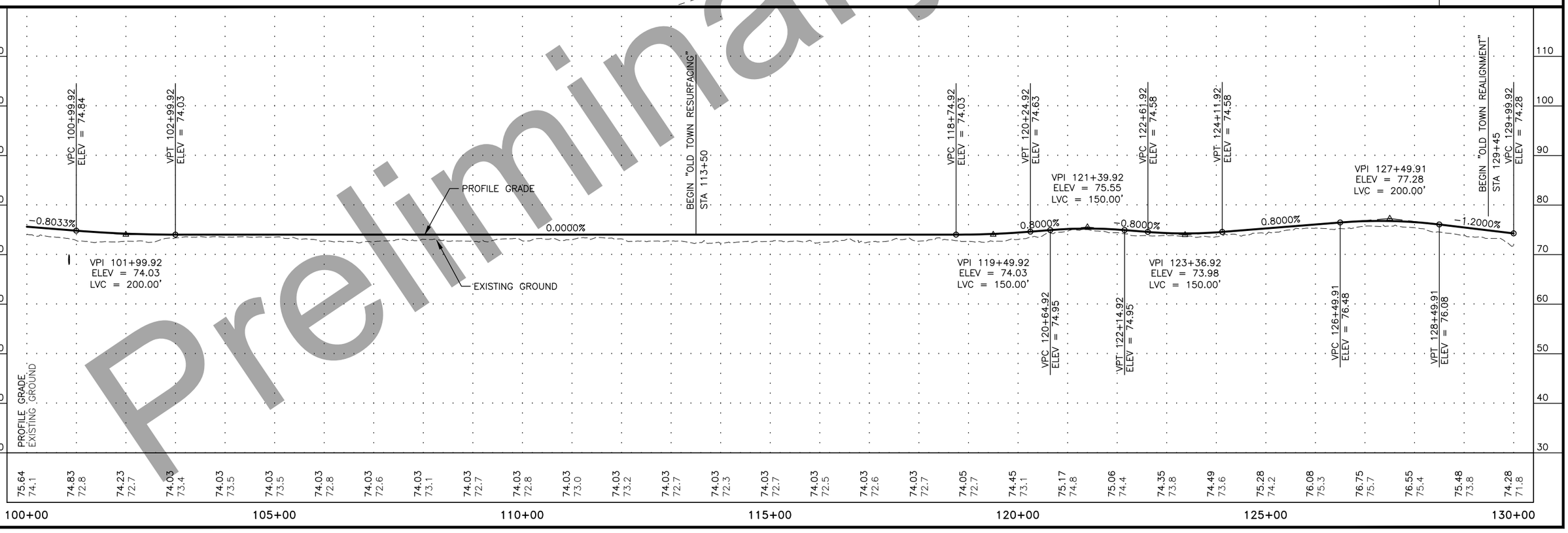

Preliminary Plans

PLANS DEVELOPED BY: STATE OF ALASKA DEPARTMENT OF TRANSPORTATION & PUBLIC FACILITIES, NORTHERN REGION, 2301 PEGER ROAD, FAIRBANKS, AK 99709 (907)451-2200
C:\Users\cmdematio\Desktop\62171_ShogelukAptRA\04 PS&E\04 Plans\Review Plan Set\62171_F_P&P-100+00.00-130+00.00 Sun, Aug/23/20 07:10pm

NO.	DATE	REVISION

STATE	PROJECT DESIGNATION	YEAR	SHEET NO.	TOTAL SHEETS
ALASKA	Z621710000 / 0002163	2020	F5	F5

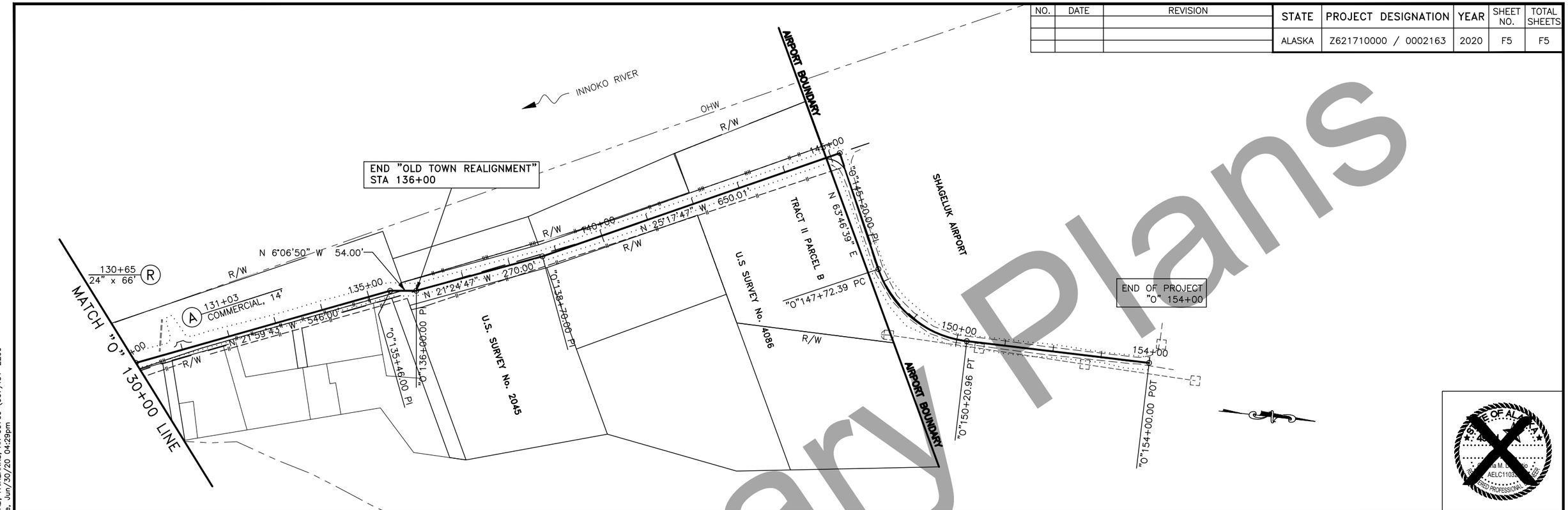

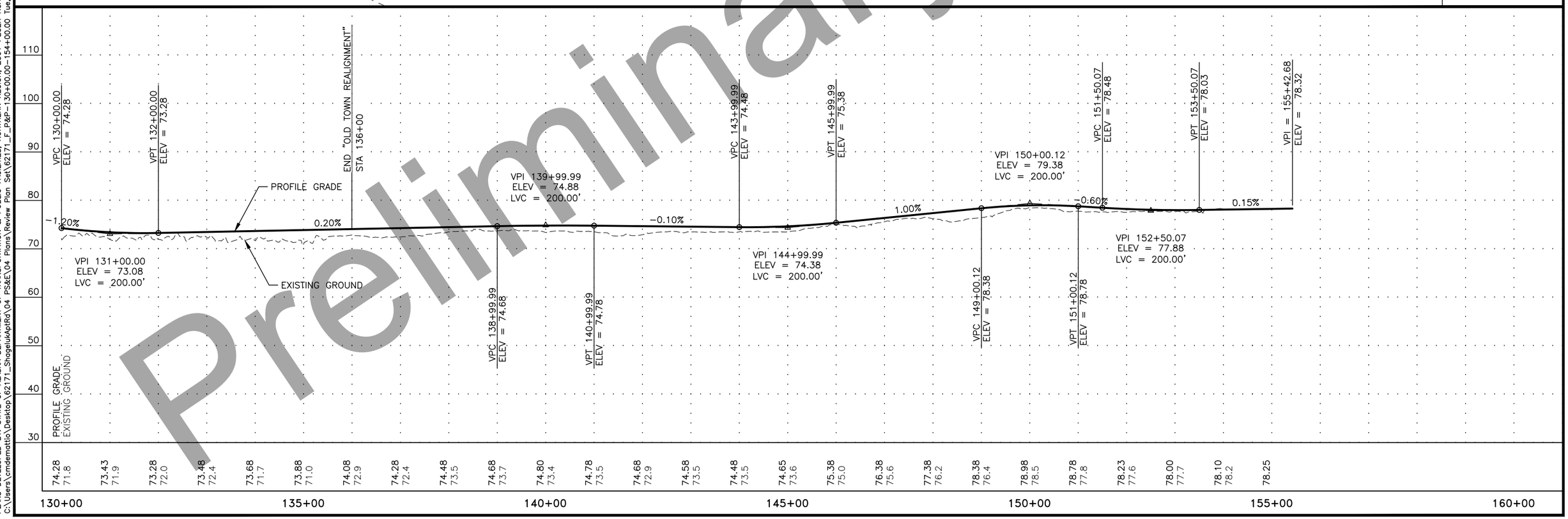

Preliminary Plans

PLANS DEVELOPED BY: STATE OF ALASKA DEPARTMENT OF TRANSPORTATION & PUBLIC FACILITIES, NORTHERN REGION, 2301 PEGER ROAD, FAIRBANKS, AK 99709 (907)451-2200
C:\Users\cmdematio\Desktop\62171_ShogelukApt\04 PS&E\04 Plans\Review Plan Set\62171_F_P&P-130+00.00-154+00.00 Tue, Jun/30/20 04:29pm

NO.	DATE	REVISION

STATE	PROJECT DESIGNATION	YEAR	SHEET NO.	TOTAL SHEETS
ALASKA	Z621710000 / 0002163	2020	G1	G1

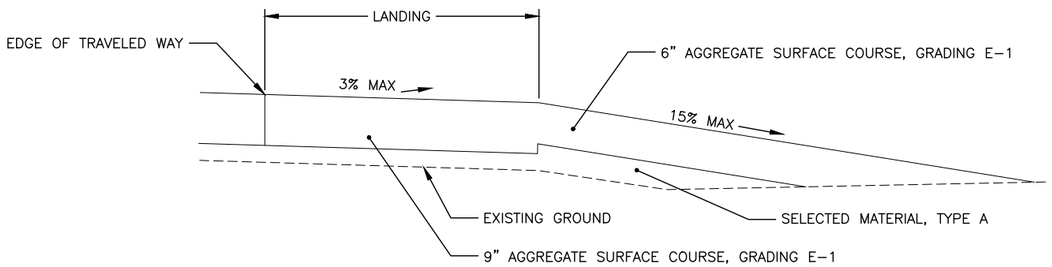

APPROACH ELEVATION – FILL CONDITION

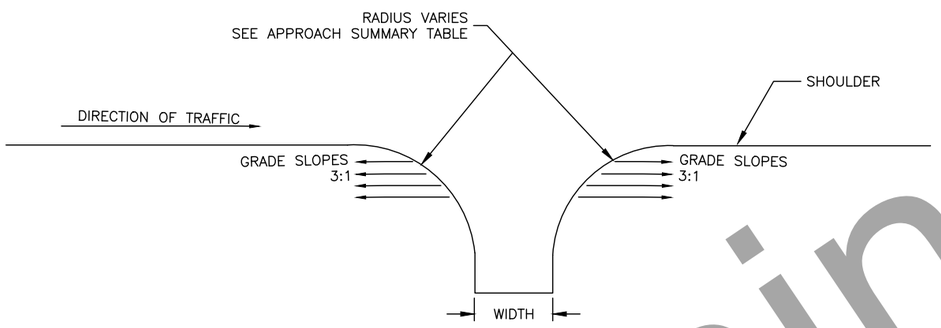

INTERSECTION DETAIL
APPROACH INTERSECTION

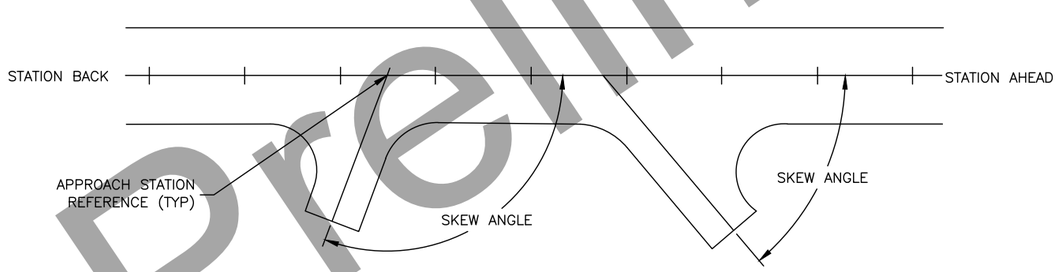

STATION REFERENCE DETAIL

APPROACH SUMMARY

STATION		WIDTH	TYPE	RADIUS AHD	RADIUS BK	LANDING LENGTH	GRADE	SKEW ANGLE	
		FT		STA	STA	FT			
"O" 11+35	LT	24	COMMERCIAL	5	40	12	-2%	42°	
"O" 13+25	LT	14	COMMERCIAL	20	20	12	-2%	90°	
"O" 121+07	RT	14	COMMERCIAL	10	10	2.75	-2%	90°	LIMITED ROW, MATCH EXISTING
"O" 131+03	LT	14	COMMERCIAL	20	8	8	-2%	80°	RIVER ACCESS

APPROACH NOTES:

1. CONSTRUCT APPROACHES IN THE LOCATION AND TO THE DIMENSIONS SHOWN IN THE APPROACH SUMMARY TABLE AND DETAILS.
2. APPROACH TRANSITIONS, DIMENSIONS, AND LOCATIONS MAY BE FIELD ADJUSTED AS APPROVED BY THE ENGINEER.
3. RE-GRADING DRIVEWAY SLOPES IS SUBSIDIARY TO PAY ITEM 639(2) APPROACH, PUBLIC.
4. ENSURE POSITIVE DARINAGE AWAY FROM AIRPORT ROAD AND APPROACH EMBANKMENT FOR ALL APPROACHES.

Preliminary Plans

APPROACH DETAILS & SUMMARY

PLANS DEVELOPED BY: STATE OF ALASKA DEPARTMENT OF TRANSPORTATION & PUBLIC FACILITIES, NORTHERN REGION, 2301 PEGER ROAD, FAIRBANKS, AK 99709 (907)451-2200
C:\Users\cmdermatto\Desktop\62171_ShagelukAptRd\04 PS&E\04 Plans\Review Plan Set\62171_G-Approach Details-Approach Details & Summary Fri, May/22/20 11:11am

NO.	DATE	REVISION

STATE	PROJECT DESIGNATION	YEAR	SHEET NO.	TOTAL SHEETS
ALASKA	Z621710000 / 0002163	2020	H1	H1

SIGNING SUMMARY

LOC. NO.	STATION	LOCATION LT.	LOCATION RT.	ASDS CODE	LEGEND	SIZE H X V (INCHES)	BRACING/ FRAMING BRACED	BRACING/ FRAMING FRAMED	AREA (SQ.FT.)	MTG. HGT. (FT.)	DIR.	POST TYPE	POST SIZE (INCHES)	POST NO.	REMARKS
1	15+00		X	R2-1	SPEED LIMIT 20	30 X 36	X		7.50		SE	PST	2.5	1	REMOVE EXISTING SEE NOTE 1
TOTAL = 7.50															

POST TYPE LEGEND:

PST = PERFORATED STEEL TUBE
TS = TUBE STEEL (SQUARE STRUCTURAL STEEL TUBING)
W_X_ = WIDE FLANGE

SIGNING NOTES:

1. REMOVE AND DISPOSE OF ALL EXISTING SIGNS AND SIGN FOUNDATIONS WITHIN THE PROJECT LIMITS, EXCEPT THOSE DESIGNATED FOR REINSTALLATION, SALVAGE OR OTHERWISE NOTED.
2. MOUNTING HEIGHTS ARE PER STANDARD DRAWING S-05.01 UNLESS OTHERWISE NOTED.
3. DETERMINE POST LENGTHS IN THE FIELD. DO NOT EXTEND POSTS ABOVE TOP OF SIGN.
4. INSTALL PST SIGN POSTS WITH SLEEVE TYPE SOIL EMBEDMENT PER STANDARD DRAWING S-30.04. ATTACH THE SIGN POST TO THE SLEEVE USING GALVANIZED 3/8" BOLT, NUT, SPLIT LOCK WASHER AND TWO FLAT WASHERS.
5. INSTALL "TUBE POST SIGN BRACING" AS SHOWN ON STANDARD DRAWING S-01.01 ON ALL SIGNS, EXCEPT D3-1 SERIES SIGNS, MOUNTED ON A SINGLE POST AND HAVING A DIMENSION OF 30 INCHES OR GREATER. INSTEAD OF THE 5/8" GALVANIZED BOLTS AND NYLON LOCKING NUTS SHOWN STANDARD DRAWING S-01.00, USE GALVANIZED 3/8" BOLTS, SPLIT LOCK WASHERS AND NUTS. STAINLESS STEEL FASTENER HARDWARE MAY BE USED INSTEAD OF GALVANIZED. 1/4" X 1 1/2" ALUMINUM ALLOY 6061-T6 BAR MAY ALSO BE USED TO FABRICATE SIGN BRACES.
6. ATTACH ALL SIGNS TO THEIR SUPPORTS WITH 3/8" BOLTS, EXCEPT ATTACH UNFRAMED SIGNS TO PST POSTS WITH ALUMINUM DRIVE RIVETS. WIND WASHERS ARE NOT REQUIRED WITH DRIVE RIVETS. INCLUDE SPLIT LOCK WASHERS WHEN BOLTS ARE USED.
7. ALL FASTENER HARDWARE SHALL MEET THE REQUIREMENTS OF THE "FASTENER SPECIFICATION TABLE" ON THIS SHEET.
8. MAINTAIN EXISTING SIGNS UNTIL NEW SIGNS ARE INSTALLED. DO NOT LEAVE DUPLICATE OR CONFLICTING SIGNING UP AT ANY TIME.
9. LOCATE AND PROTECT ALL NEW AND EXISTING UNDERGROUND UTILITIES, INCLUDING BUT NOT LIMITED TO: PIPELINES, INTERCONNECT CABLES, SIGNAL SYSTEMS, LIGHTING SYSTEMS, STORM AND SANITARY SEWERS, WATER SYSTEMS, AND TELEPHONE AND ELECTRICAL CABLES, PRIOR TO INSTALLING SIGN POSTS. NOT ALL EXISTING UTILITIES MAY BE SHOWN ON THE PLANS.
10. CLEARING MAY BE REQUIRED TO ENSURE ADEQUATE VISIBILITY OF SIGNS. THIS WORK IS SUBSIDIARY TO PAY ITEM 615(1) STANDARD SIGN.

FASTENER SPECIFICATION TABLE

FASTENERS	STEEL	STAINLESS STEEL
BOLTS	ASTM A 307	ASTM F 593
NUTS	ASTM A 563	ASTM F 594
WASHERS	ASTM F 844	ASTM A 480

THESE SPECIFICATIONS APPLY TO ALL SIGN FASTENER HARDWARE ON THE PROJECT.

Preliminary Plans

SIGN SUMMARY

PLANS DEVELOPED BY: STATE OF ALASKA DEPARTMENT OF TRANSPORTATION & PUBLIC FACILITIES, NORTHERN REGION, 2301 PEGER ROAD, FAIRBANKS, AK 99709 (907)451-2200
C:\Users\cmdernalt\o\Desktop\62171_SnagelukAptRd\04 PS&E\04 Plans\Review Plan Set\62171_E_Culvert_Sheets-H1 Sign Summary Fri, May/22/20 11:11am

NO.	DATE	REVISION

STATE	PROJECT DESIGNATION	YEAR	SHEET NO.	TOTAL SHEETS
ALASKA	Z621710000 / 0002163	2020	P1	P1

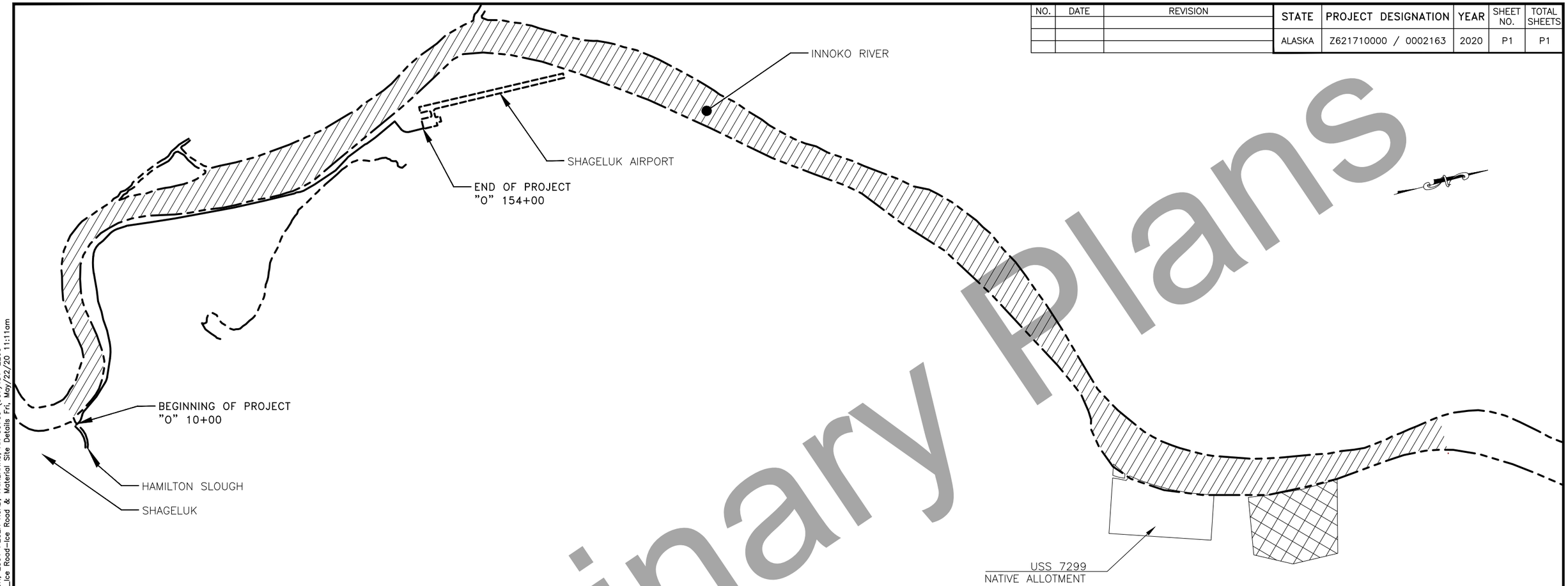

Preliminary Plans

NOTES:

1. ALL WORK AND MATERIALS REQUIRED TO BUILD AND MAINTAIN THE ICE ROAD WILL BE SUBSIDIARY TO PAY ITEMS 203(5), 301(4), 611(1), AND 641(3).
2. THE ICE ROAD STUDY AREA WAS EVALUATED AS A PART OF THE NEPA PROCESS WHILE DEVELOPING THE ENVIRONMENTAL DOCUMENT. IF THE CONTRACTOR'S PROPOSED ICE ROAD LEAVES THE STUDY AREA IT IS THE CONTRACTORS RESPONSIBILITY TO MAKE SURE ALL PERMITS AND CLEARANCES ARE IN PLACE PRIOR TO CONSTRUCTING THE ICE ROAD.
3. THE ICE ROAD SHALL BE KEPT FREE OF DEBRIS.
4. EQUIPMENT, OTHER THAN VESSELS, MUST NOT ENTER OPEN WATER AREAS DURING THE WINTER.
5. ICE OR SNOW BRIDGES AND APPROACH RAMPS CONSTRUCTED AT STREAM CROSSINGS MUST BE SUBSTANTIALLY FREE OF EXTRANEOUS MATERIALS (SOIL, ROCK, WOOD, VEGETATION...).
6. ICE OR SNOW BRIDGES AND APPROACH RAMPS MUST BE REMOVED IF REQUESTED BY ALASKA DEPARTMENT OF FISH AND GAME DIVISION OF HABITAT.
7. FUELING EQUIPMENT WHILE ON THE ICE ROAD IS PROHIBITED.
8. ALTERATIONS TO THE BANKS OF ANY WATER COURSE FOR CONSTRUCTION OF THE ICE ROAD IS PROHIBITED AT ANY TIME.

ICE ROAD STUDY AREA

PROPOSED MATERIAL SITE

ICE ROAD & MATERIAL SITE DETAILS

PLANS DEVELOPED BY: STATE OF ALASKA DEPARTMENT OF TRANSPORTATION & PUBLIC FACILITIES, NORTHERN REGION, 2301 PEGER ROAD, FAIRBANKS, AK 99709 (907)451-2200
C:\Users\cmdenatto\Desktop\62171_ShagelukAptRd\04 PS&E\04 Plans\Review Plan Set\62171_P_Material Site_Ice Road-Ice Road & Material Site Details Fri, May/22/20 11:11am

NO.	DATE	REVISION

STATE	PROJECT DESIGNATION	YEAR	SHEET NO.	TOTAL SHEETS
ALASKA	Z621710000 / 0002163	2020	Q1	Q4

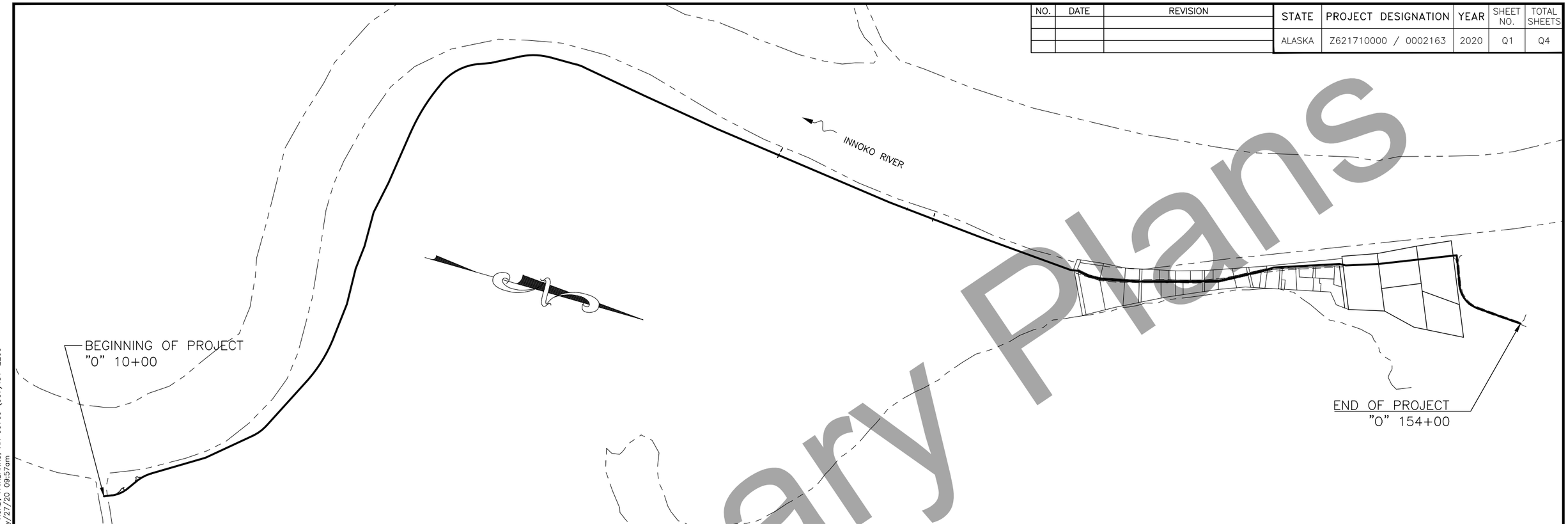

Preliminary Plans

ESCP GENERAL NOTES:

GENERAL:

1. THIS ESCP IS A GENERAL PLAN FOR GUIDING THE DEVELOPMENT OF THE CONTRACTOR'S SWPPP. THE CONTRACTOR IS EXPECTED TO PROVIDE ADDITIONAL DETAILS AND BMP'S BASED ON THE CONTRACTOR'S ACTUAL SCHEDULE AND CONSTRUCTION METHODS, AS REQUIRED TO COMPLY WITH THE CONSTRUCTION GENERAL PERMIT.
2. SHAGELUK DOES NOT HAVE A WEATHER STATION LOCATED AT THE AIRPORT OR IN THE COMMUNITY. WEATHER DATA PROVIDED IS FROM THE CLOSEST WEATHER STATION LOCATED IN HOLY CROSS.
3. READ AND COMPLY WITH THE CONSTRUCTION GENERAL PERMIT (CGP) AND SECTION 641 OF THE PROJECT SPECIFICATIONS.
4. PRIOR TO MOBILIZATION TO THE SITE THE CONTRACTOR IS REQUIRED TO WASH ALL EQUIPMENT AND ENSURE THAT THE EQUIPMENT IS FREE OF ALL SOIL, VEGETATION, AND ROCK MEDIUM. THIS WORK IS SUBSIDIARY TO PAY ITEM 641(3).
5. INSTALL EROSION AND SEDIMENT CONTROL BMP'S PRIOR TO THE START OF CONSTRUCTION, AS NECESSARY TO MINIMIZE EROSION FROM DISTURBED SURFACES AND CAPTURE SEDIMENT ON SITE.
6. ALL DISTURBED GROUND CAPABLE OF SUPPORTING VEGETATION SHALL BE RE-VEGETATED FOR FINAL STABILIZATION. FINAL STABILIZED AREAS NOT RE-VEGETATED SHALL BE 100% COVERED BY ROCK OR OTHER PERMANENT NON-ERODIBLE MATERIAL. ATTAINMENT OF FINAL STABILIZATION SHALL BE AS APPROVED IN THE FIELD BY THE ENGINEER. THIS WORK WILL BE SUBSIDIARY TO PAY ITEM 641(3).
7. WATERING FOR DUST CONTROL SHALL BE EMPLOYED DURING CONSTRUCTION AND IS SUBSIDIARY TO PAY ITEM 643(2).
8. STOCKPILE AND STAGING LOCATIONS SHALL BE RECLAIMED TO THEIR ORIGINAL CONDITION AS APPROVED BY THE ENGINEER.
9. TEMPORARY BMPS REQUIRED BY THIS ESCP WILL NOT BE MEASURED FOR PAYMENT AND ARE SUBSIDIARY TO PAY ITEM 641(3).
10. A PERSON MEETING THE QUALIFICATION OF THE SECRETARY OF THE INTERIOR'S STANDARDS AND GUIDELINES WILL BE ON-SITE PRIOR TO CONSTRUCTION TO DEMARCATE AND SET-UP BARRIERS (ORANGE COLOR FENCING) AROUND XHC-014 IN ORDER TO PREVENT ACCIDENTAL IMPACTS TO THIS RESOURCE DURING CONSTRUCTION ACTIVITIES.
11. THE CONTRACTOR SHALL CONTACT, THROUGH THE ENGINEER, THE US FISH AND WILDLIFE PERMIT OFFICE IF ANY EAGLE NEST ARE LOCATED WITHIN A HALF MILE OF ANY PROJECT RELATED ACTIVITY.
12. THE CONTRACTOR SHALL ABIDE BY ALL PERMITS FOUND IN APPENDIX A.
13. ALL EQUIPMENT SHALL BE FUELED AT A MINIMUM OF 100 FEET AWAY FROM ANY DRAINAGE CHANNEL OF ACTIVE WATER BODY.
14. CONTRACTOR IS RESPONSIBLE FOR COORDINATING AND COMPLYING WITH MATERIAL SITE OWNERS FOR ANY RECLAMATION REQUIRED.
15. SEE APPENDIX C FOR ADDITIONAL EROSION AND SEDIMENT CONTROL PLAN INFORMATION.

CULVERTS:

16. PROVIDE TEMPORARY INLET AND OUTLET PROTECTION FOR CULVERTS WITHIN THE AREA OF DISTURBANCE PRIOR TO MAKING OPERATIONAL OR BEGINNING EARTH DISTURBING ACTIVITIES.
17. PERMANENT INLET PROTECTION IS ESTABLISHED VEGETATION. PERMANENT OUTLET PROTECTION IS THE EMBANKMENT ARMORING WHERE THE CULVERTS DAYLIGHT.

PERIMETER CONTROL:

18. CONTROLS SHALL BE INSTALLED WHERE AREAS LESS THAN 25 FEET OF UNDISTURBED VEGETATIVE BUFFER EXISTS BETWEEN THE PROJECT GROUND DISTURBING ACTIVITY AND WATERS OF THE US INCLUDING WETLANDS.

HAULING:

19. ENSURE LOADS ARE STABLE OR COVERED SO THAT NO MATERIAL ESCAPEMENT OCCURS DURING HAULING ACTIVITIES.

STOCKPILE PROTECTION:

20. PERIMETER CONTROLS SHALL BE INSTALLED AROUND ALL STOCKPILES CONTAINING ERODIBLE MATERIALS.
21. EROSION CONTROL BMP'S MAY HAVE TO BE REMOVED AND RE-INSTALLED EACH SHIFT.
22. COVER MUST BE USED ON STOCKPILES IN ACCORDANCE WITH SUBSECTION 641-3.01.5 TO PROVIDE ADDITIONAL EROSION PROTECTION.
23. NO STOCKPILES OR STAGING AREAS SHALL BE ALLOWED IN WETLANDS.

ENVIRONMENTAL INFORMATION:

24. HISTORIC PLACES: XHC-014 AND XHC-063 (OLD SHAGELUK DISTRICT).

ESCP DETAILS

PLANS DEVELOPED BY: STATE OF ALASKA DEPARTMENT OF TRANSPORTATION & PUBLIC FACILITIES, NORTHERN REGION, 2301 PEGER ROAD, FAIRBANKS, AK 99709 (907)451-2200
C:\Users\cmdernatto\Desktop\62171_ShagelukAptRG\04 PS&E\04 Plans\Review Plan Set\62171_Q_ESCP-ESCP Details Wed, May/27/20 09:57am

NO.	DATE	REVISION

STATE	PROJECT DESIGNATION	YEAR	SHEET NO.	TOTAL SHEETS
ALASKA	Z621710000 / 0002163	2020	Q2	Q4

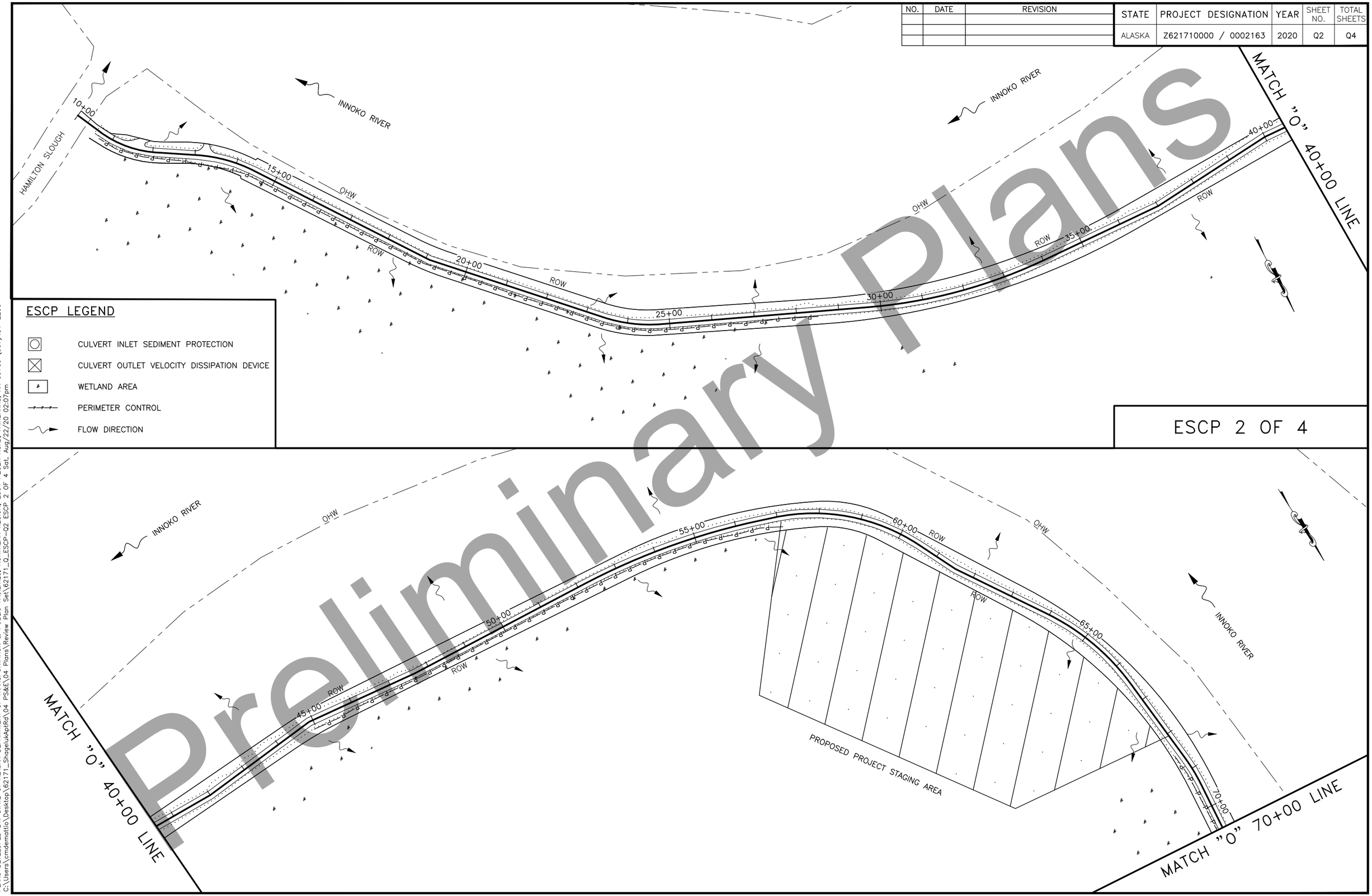

ESCP LEGEND

- CULVERT INLET SEDIMENT PROTECTION
- CULVERT OUTLET VELOCITY DISSIPATION DEVICE
- WETLAND AREA
- PERIMETER CONTROL
- FLOW DIRECTION

ESCP 2 OF 4

Preliminary Plans

PLANS DEVELOPED BY: STATE OF ALASKA DEPARTMENT OF TRANSPORTATION & PUBLIC FACILITIES, NORTHERN REGION, 2301 PEGER ROAD, FAIRBANKS, AK 99709 (907)451-2200
C:\Users\cmdernatlio\Desktop\62177_SnogeluxAptRG\04 PS&E\04 Plans\Review Plan Set\62177_Q_ESCP-Q2 ESCP 2 OF 4 Sd1, Aug/22/20 02:07pm

NO.	DATE	REVISION

STATE	PROJECT DESIGNATION	YEAR	SHEET NO.	TOTAL SHEETS
ALASKA	Z621710000 / 0002163	2020	Q3	Q4

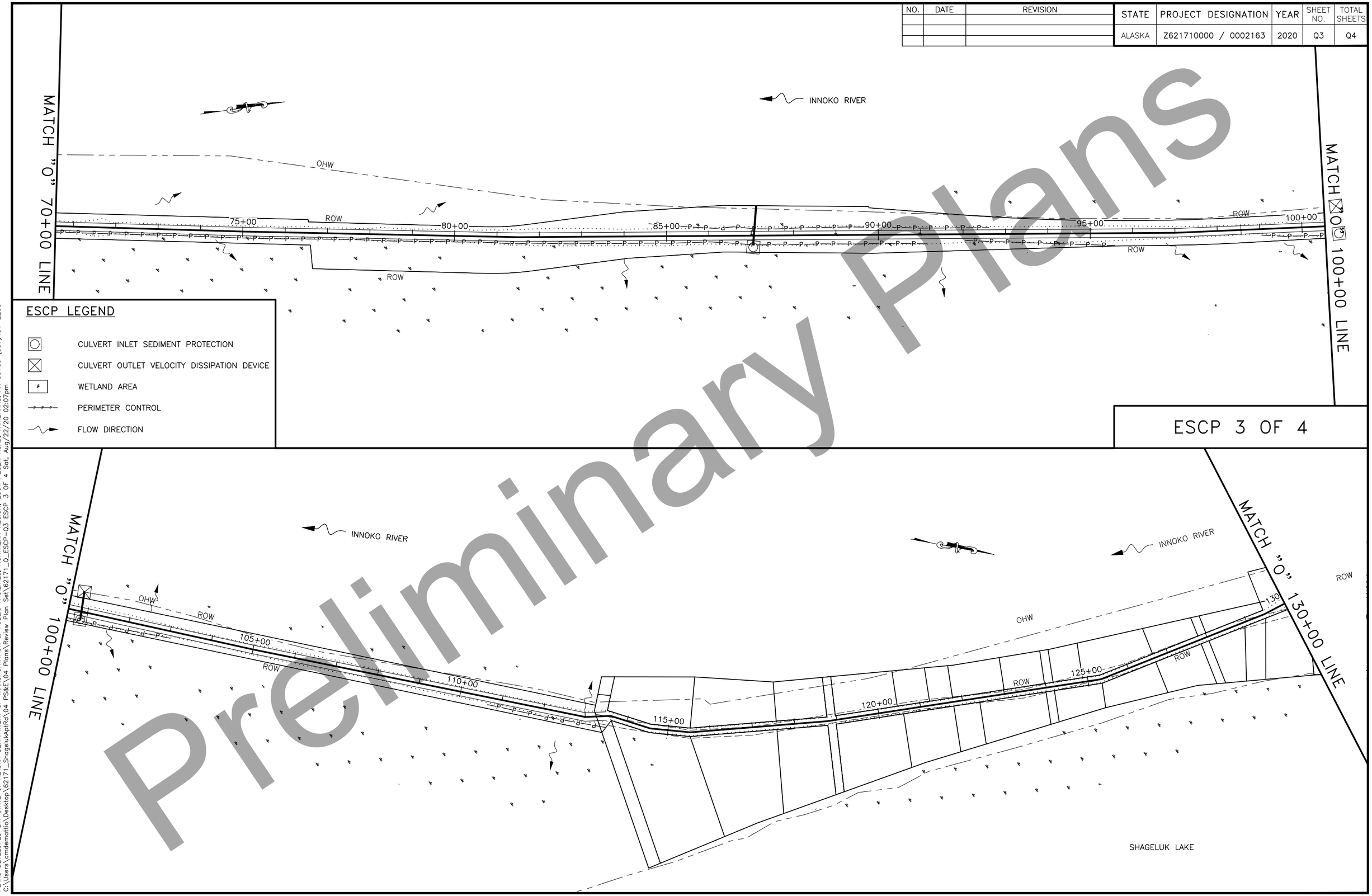

ESCP LEGEND

- CULVERT INLET SEDIMENT PROTECTION
- CULVERT OUTLET VELOCITY DISSIPATION DEVICE
- WETLAND AREA
- PERIMETER CONTROL
- FLOW DIRECTION

ESCP 3 OF 4

Preliminary Plans

PLANS DEVELOPED BY: STATE OF ALASKA DEPARTMENT OF TRANSPORTATION & PUBLIC FACILITIES, NORTHERN REGION, 2301 PEGER ROAD, FAIRBANKS, AK 99709 (907)451-2200
C:\Users\crnderna\tio\Desktop\62171_ShagelukAptRG\04 PS&E\04 Plans\Review Plan Set\62171_Q_ESCP-Q3 ESCP 3 OF 4 Sot, Aug/22/20 02:07pm

NO.	DATE	REVISION

STATE	PROJECT DESIGNATION	YEAR	SHEET NO.	TOTAL SHEETS
ALASKA	Z621710000 / 0002163	2020	Q4	Q4

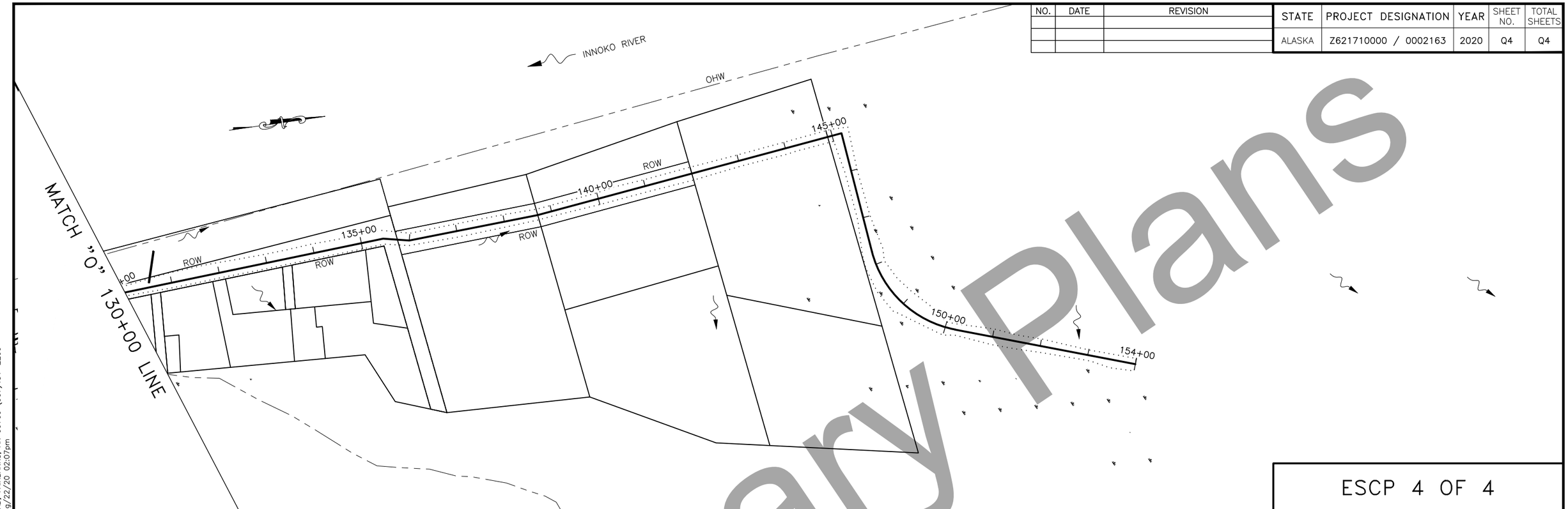

ESCP 4 OF 4

ESCP LEGEND

- CULVERT INLET SEDIMENT PROTECTION
- CULVERT OUTLET VELOCITY DISSIPATION DEVICE
- WETLAND AREA
- PERIMETER CONTROL
- FLOW DIRECTION

Preliminary Plans

PLANS DEVELOPED BY: STATE OF ALASKA DEPARTMENT OF TRANSPORTATION & PUBLIC FACILITIES, NORTHERN REGION, 2301 PEGER ROAD, FAIRBANKS, AK 99709 (907)451-2200
C:\Users\cmderrato\Desktop\Z171_ShagelukAptRG\04 PS&E\04 Plans\Review Plan Set\0217_Q_ESCP-Q4 ESCP 4 OF 4 Sat, Aug/22/20 02:07pm

NO.	DATE	REVISION

STATE	PROJECT DESIGNATION	YEAR	SHEET NO.	TOTAL SHEETS
ALASKA	Z621710000 / 0002163	2020	S1	S1

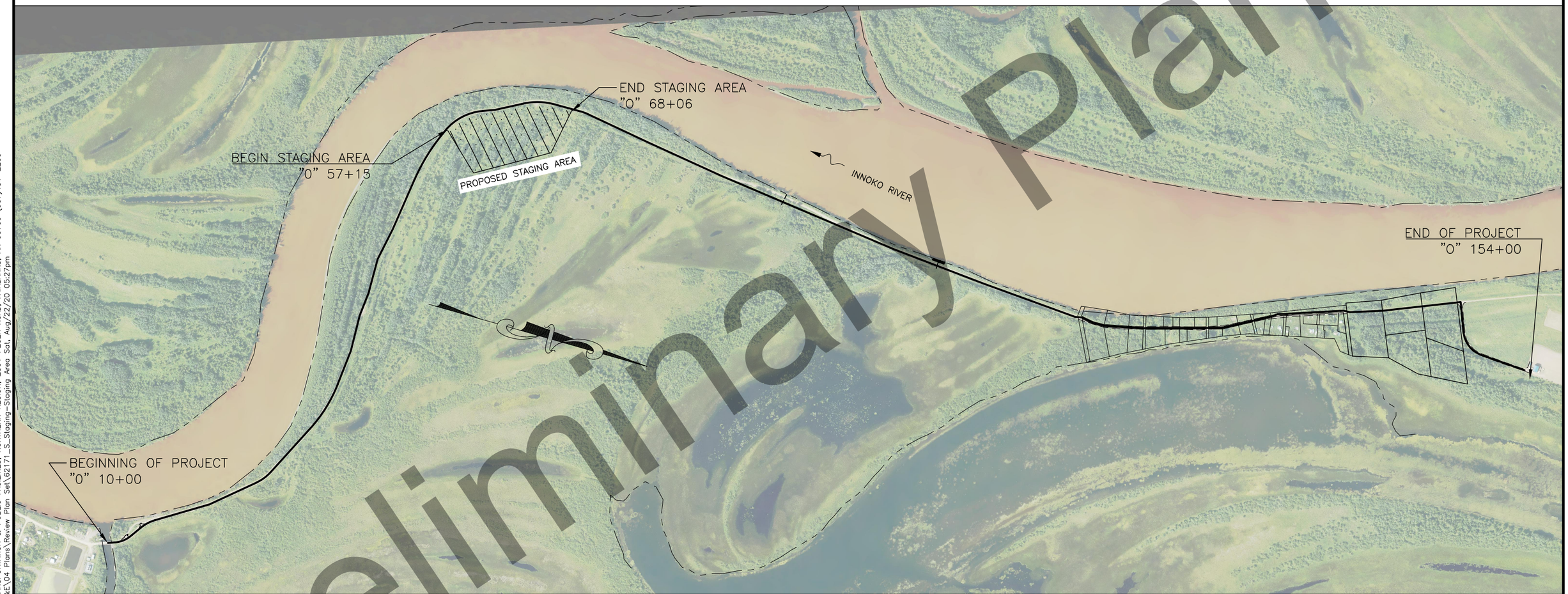

Preliminary Plans

STAGING AREA

PLANS DEVELOPED BY: STATE OF ALASKA DEPARTMENT OF TRANSPORTATION & PUBLIC FACILITIES, NORTHERN REGION, 2301 PEGER ROAD, FAIRBANKS, AK 99709 (907)451-2200
C:\Users\cmderratto\Desktop\62171_Shageluk&PIRG\04 PS&E\04 Plans\Review Plan Set\62171_S_Staging-Staging Area Sat, Aug/22/20 05:27pm

STATE	PROJECT DESIGNATION	YEAR	SHEET NO.	TOTAL SHEETS
ALASKA	Z621710000 / 0002163	2020	T1	T1

VERTICAL DROP-OFFS

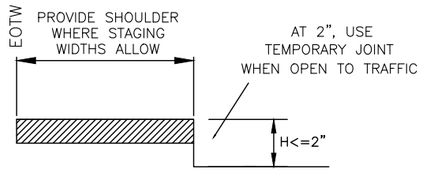

CASE A

DROP-OFFS ≤2 INCHES
(PAVED SURFACES ONLY)

1. USE "UNEVEN LANES" (CW8-11) SIGNS FOR ALL DROP-OFFS IN BETWEEN TRAFFIC LANES.
2. LEAVE NO DROP-OFFS > 1.5" IN THE TRAFFIC LANE OR ACTIVE WHEEL TRACK.

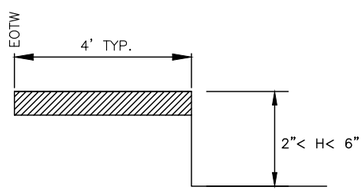

CASE B

2"< DROP-OFFS < 6"
(ALL ROADWAY SURFACES)

1. PLACE CONES OR CANDLES FOR DROP-OFFS ≥ 4 FEET AND ≤ 30 FEET FROM THE EOTW.
2. USE DRUMS OR TYPE II BARRICADES FOR DROP-OFFS < 4 FEET FROM THE EOTW.

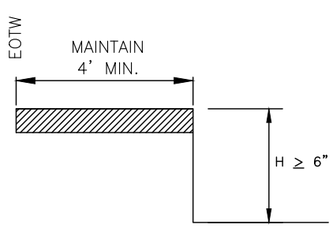

CASE C

DROP-OFFS ≥6"
(ALL ROADWAY SURFACES AND ROADSIDE SLOPES)

1. PLACE DRUMS OR TYPE II BARRICADES FOR DROP-OFFS ≤ 24" WITHIN THE CLEAR AREA.
2. PROVIDE PORTABLE CONCRETE BARRIER FOR DROP-OFFS >24" WITHIN 15 FEET OF THE EOTW. USE DRUMS OR TYPE II BARRICADES IF BEYOND 15 FEET.

FILL SLOPES

STEEPER THAN OR EQUAL TO 3:1 | BETWEEN 4:1 AND 3:1 | FLATTER THAN OR EQUAL TO 4:1

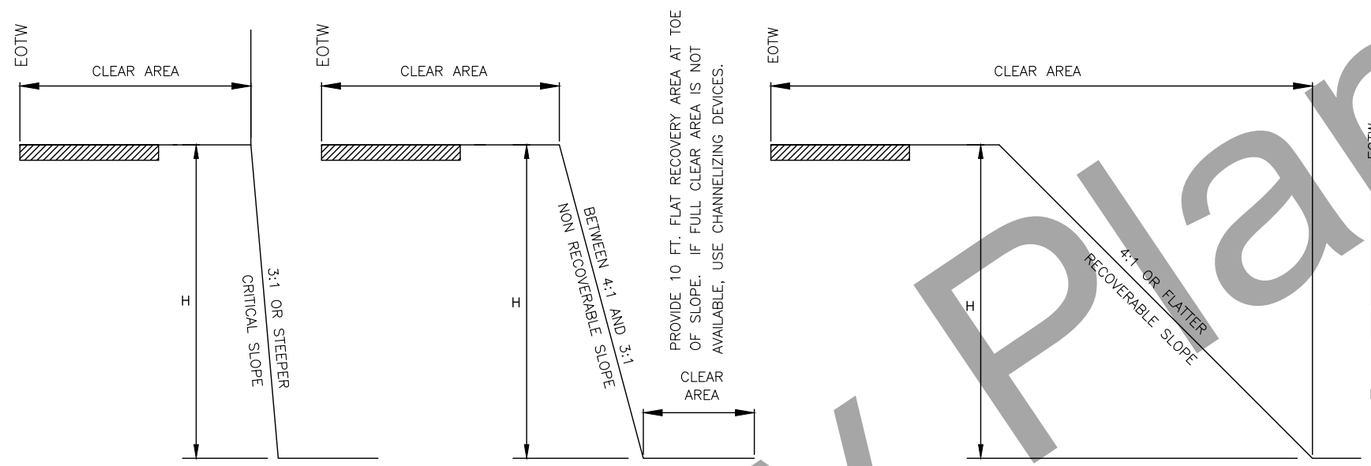

CUT SLOPES

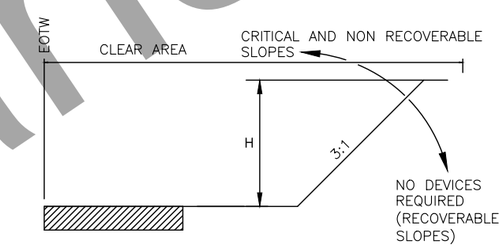

EOTW = EDGE OF TRAVELED WAY

CLEAR AREA REQUIREMENTS

	LOW SPEED < = 35 MPH	INTERMEDIATE SPEED 40 MPH TO 45 MPH	HIGH SPEED > = 50 MPH
RURAL	15'	24'	30'
URBAN	10' DITCH CONDITIONS, OR 2' BEHIND CURB	15' DITCH CONDITIONS OR 2' BEHIND CURB	15' DITCH CONDITIONS OR 2' BEHIND CURB

CHANNELIZING DEVICE REQUIREMENTS FOR SLOPES 3:1 OR STEEPER WITHIN THE CLEAR AREA

	H <= 15'	H > 15'
< 2000 VPD (LOW VOLUME)	CANDLES OR CONES	TYPE II BARRICADES OR DURMS
> 2000 VPD	TYPE II BARRICADES OR DRUMS	PORTABLE CONCRETE BARRIERS OR TEMPORARY GUARDRAIL

TRAFFIC CONTROL NOTES:

1. USE THE EXISTING CROSS-SECTION (PRIOR TO CONSTRUCTION) AS A BASIS FOR DETERMINING WHEN CHANNELIZING DEVICES ARE NEEDED.
2. INSTALL CHANNELIZING DEVICES WHEN THE HORIZONTAL OR VERTICAL CURVATURE IS MADE MORE SEVERE.
3. INSTALL FLEXIBLE DELINEATORS WHEN ALL VEGETATION OVER 4 FEET HIGH IS CLEARED FROM FILL SLOPES THAT ARE 3:1 OR STEEPER IN THE CLEAR AREA.
4. USE PORTABLE CONCRETE BARRIER FOR WARRANTING CONDITIONS WHICH LAST LONGER THAN 3 DAYS. FOR CONDITIONS LASTING LESS THAN 3 DAYS, OTHER CHANNELIZING DEVICES MAY BE INSTALLED.
5. TERMINATE RUNS OF PORTABLE CONCRETE BARRIER USING THE FOLLOWING METHODS:
   - A) CONNECT TO A PORTABLE CRASH CUSHION, OR
   - B) PROVIDE A CONCRETE BARRIER WITH THRIE BEAM TRANSITION TO W-BEAM GUARDRAIL, TREATED WITH A PARALLEL TERMINAL (SEE SECTION 710).
   - C) FLARE THE ENDS OF THE PORTABLE CONCRETE BARRIER AWAY FROM THE ROADWAY AT A RATE OF 7:1 ON A COMPACTED SLOPE OF 6:1 OR FLATTER, OUTSIDE OF THE CLEAR AREA. INSTALL A SLOPING PORTABLE CONCRETE BARRIER END TREATMENT, OR
   - D) BURY IN THE BACKSLOPE.
6. TERMINATE THE RUNS OF TEMPORARY W-BEAM GUARDRAIL USING THE FOLLOWING METHODS:
   - A) PROVIDE A PARALLEL TERMINAL (SEE SECTION 710)
   - B) FLARE THE ENDS OF THE TEMPORARY GUARDRAIL AWAY FROM THE ROADWAY AT A RATE OF 6:1 ON A COMPACTED SLOPE OF 6:1 OR FLATTER OUTSIDE OF THE CLEAR AREA, TERMINATE WITH A STANDARD W-BEAM END SECTION, OR
   - C) BURY IN THE BACKSLOPE.

EQUIPMENT NOTES:

1. WHEN THERE IS ACTIVE, NONMOBILE CONSTRUCTION EQUIPMENT WITHIN THE CLEAR AREA, DELINEATE THE ROADSIDE WITH TRAFFIC CONES.
2. SEPARATE PROCEDURES ARE REQUIRED FOR MOBILE WORK ZONE OPERATIONS AND SHORT DURATION WORK OF LESS THAN 12 HOURS.

WINTER SHUTDOWN NOTES:

1. WHEN REQUIRED, USE CHANNELIZING DEVICES WHICH CAN BE MAINTAINED OVER WINTER.
2. NO CHANNELIZING DEVICES ARE REQUIRED IF:
   - A) CONSTRUCTION SLOPES ARE RECOVERABLE, AND
   - B) SLOPES ARE SMOOTH AND COMPACTED, AND
   - C) REQUIRED CLEAR AREA IS PROVIDED

T1 TRAFFIC CONTROL NOTES

Preliminary Plans

PLANS DEVELOPED BY: STATE OF ALASKA DEPARTMENT OF TRANSPORTATION & PUBLIC FACILITIES, NORTHERN REGION, 2301 PEGER ROAD, FAIRBANKS, AK 99709 (907)451-2200
C:\Users\cmdematio\Desktop\62171_SnagelukAptRd\04 PS&E\04 Plans\Review Plan Set\62171_T_TCP-T1 Traffic Control Notes Fri, May/22/20 11:13am

NO.	DATE	REVISION
D	3-7-19	ISSUED FOR REVIEW
E	7-1-20	REVIEW PS&E
F	7-22-20	REVIEW PS&E - REV 1

STATE	PROJECT DESIGNATION	YEAR	SHEET NO.	TOTAL SHEETS
ALASKA	NFHWY00186	2017	U1	U10

SHAGELUK AIRPORT ACCESS RD RECONSTRUCTION, STAGE 1

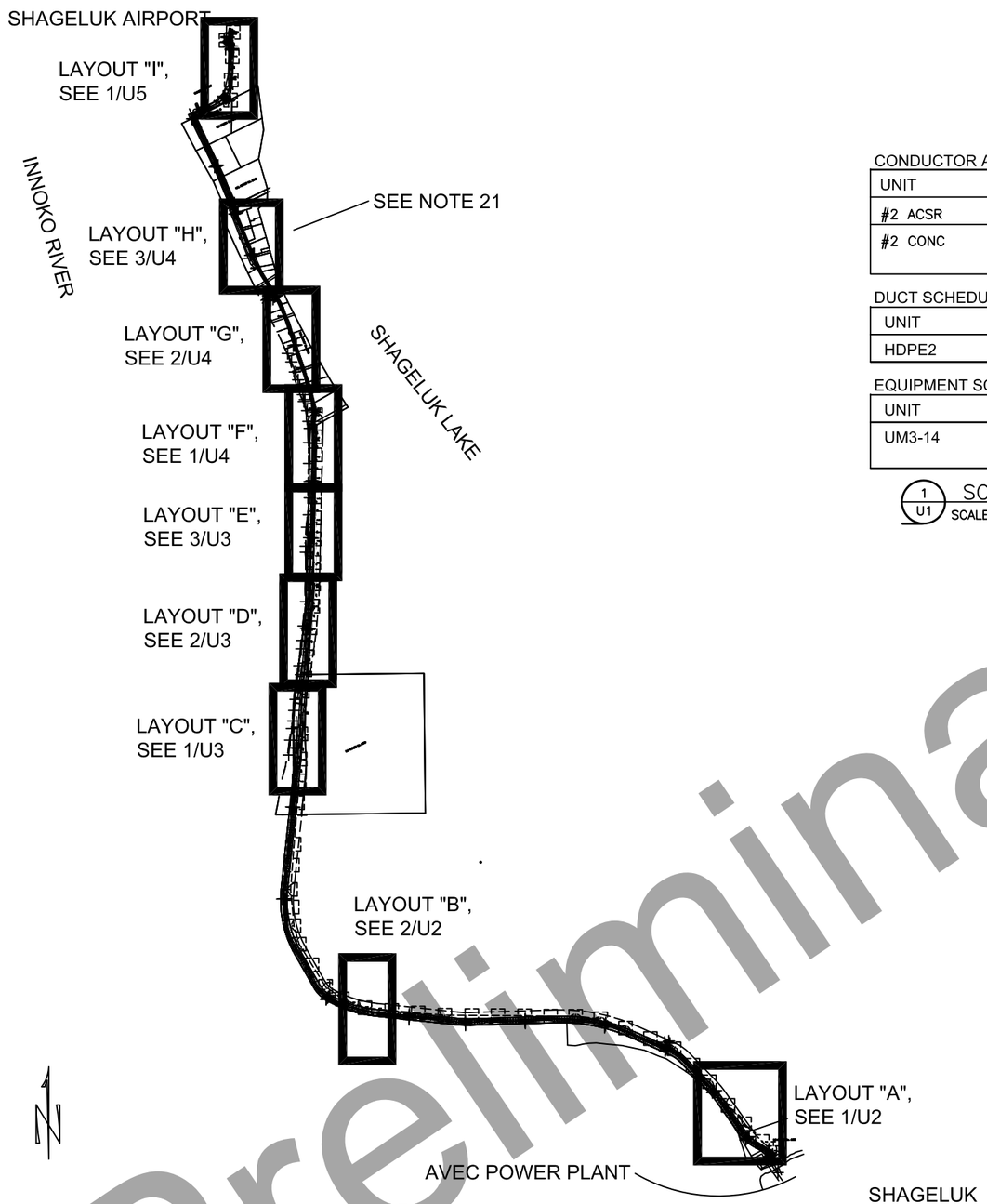

1 / U1 LINE RELOCATION LAYOUT
SCALE: SEE GRAPHIC SCALE

CONDUCTOR AND CABLE SCHEDULE

UNIT	DESIGNATION	DESCRIPTION	MANUFACTURER
#2 ACSR	OH PRIMARY CONDUCTOR	#2 ACSR, SPARATE	RUS APPROVED
#2 CONC	UG PRIMARY CONDUCTOR	#2 AL CONC, 133% EPR INSULATION, FULL COPPER CONCENTRIC NEUTRAL, JACKETED	OKONITE# 161-23-3060, OR APPROVED EQUAL

DUCT SCHEDULE

UNIT	DESIGNATION	DESCRIPTION	MANUFACTURER
HDPE2	PRIMARY DUCT	2" SCHEDULE 40, HDPE, RED (OR BLACK WITH RED STRIPES)	DURALINE, OR APPROVED EQUAL

EQUIPMENT SCHEDULE

UNIT	DESCRIPTION	DESCRIPTION	MANUFACTURER
UM3-14	4-WAY JUNCTION BOX	NORDIC FIBERGLASS, ND-362454-MG-S110-X-X (SEE SHEET U10)	NORDIC FIBERGLASS, OR APPROVED EQUAL

1 / U1 SCHEDULES
SCALE: NTS

GENERAL NOTES:

1. ALL WORK SHALL COMPLY WITH THE REQUIREMENTS OF THE MOST RECENT EDITION OF THE NATIONAL ELECTRIC SAFETY CODE (NESC), RURAL UTILITY SERVICE (RUS), AND ALASKA VILLAGE ELECTRIC COOPERATIVE (AVEC). WHERE STANDARDS VARY, THE MOST STRINGENT SHALL APPLY.
2. LOCATIONS OF EXISTING FEATURES SHOWN ON DRAWINGS ARE COMPILED FROM DRAWINGS PROVIDED BY DEPARTMENT OF TRANSPORTATION AND PUBLIC FACILITIES (DOT&PF) AND AVEC. CONTRACTOR TO FIELD VERIFY EXISTING CONDITIONS.
3. CONTRACTOR SHALL UTILIZE AN ALASKAN LICENSED LAND SURVEYOR TO STAKE THE REQUIRED ELECTRICAL DISTRIBUTION RELOCATION FACILITIES, AND COORDINATE WITH AVEC'S ENGINEER TO FIELD REVIEW THE STAKING PRIOR TO CONSTRUCTION. POLE, ANCHOR, TRENCH, AND EQUIPMENT LOCATIONS ALONG THE ALIGNMENT SHOWN MAY BE SLIGHTLY FIELD ADJUSTED BY ENGINEER. ANY FIELD MODIFICATIONS WILL BE DOCUMENTED BY AVEC'S ENGINEER AND COORDINATED WITH THE STATE'S FIELD REPRESENTATIVE. CONTRACTOR (OR CONTRACTOR'S SURVEYOR) SHALL PROVIDE THE ASBUILT LOCATIONS OF ALL EQUIPMENT INSTALLED IN AUTOCAD (v2019) FORMAT TO AVEC'S ENGINEER.
4. EXISTING DISTRIBUTION SYSTEM IS: 7,200V/12,470V WYE.
5. ALL MATERIAL PROVIDED SHALL BE ON THE RUS APPROVED MATERIALS LIST.
6. ASSEMBLY UNITS SHOWN ARE FOR EMPHASIS OF MAJOR ASSEMBLY UNITS ONLY. SEE STAKING SHEETS FOR REQUIRED ASSEMBLY UNITS. WHERE ASSEMBLY UNITS ARE NOT DETAILED IN THIS DRAWING SET, REFERENCE REA STANDARD DETAILS, REA BULLETIN 50-3, STD D 804.
7. POLES SHALL BE SET AT DEPTH OF 10% OF POLE HEIGHT PLUS 3' MINIMUM (7'-0" MINIMUM FOR 40' POLE); AND NOT GREATER THAN 10% OF POLE HEIGHT PLUS 4.5', EXCEPT AS NOTED.
8. TYPICAL NEW POLE 40/4, UNLESS OTHERWISE NOTED.
9. PROVIDE POLE NUMBERS FOR ALL NEW POLES (TO MATCH NUMBER FROM EXISTING RETIRED POLES).
10. PROVIDE CLEARING AND GRUBBING WHERE REQUIRED.
11. PROVIDE ARMOR ROD ON PRIMARY AND NEUTRAL CONDUCTORS AT EVERY ATTACHMENT EXCEPT AT DEADENDS.
12. OVERHEAD CONDUCTORS SHALL BE TIED USING MANUFACTURED PREFORMED TIES.
13. PROVIDE VIBRATION DAMPENERS ON PRIMARY AND NEUTRAL CONDUCTORS ON BOTH SIDES OF ITS SUPPORT ON ALL POLES PROVIDED OR MODIFIED UNDER THIS PROJECT.
14. PRIMARY SHALL NOT CROSS NEUTRAL IN ANY SPAN; INSTALL NEUTRAL ON ROAD SIDE OF POLES.
15. NEW PRIMARY SHALL BE #2 ACSR SPARATE.
16. JUMPER PRIMARY AND NEUTRAL WITH #2 ACSR SPARATE AND COMPRESSION H-TAP CONNECTORS.
17. SAG NEW CONDUCTORS BETWEEN POLES 1-32 AND 1-48 WITH SAG CHARTS PROVIDED BY ENGINEER. MATCH EXISTING TENSION WHEN RE-WORKING POLE 1-1 THROUGH POLE 1-5.
18. PROVIDE 3" SQUARE CURVED WASHER ON BOTH SIDES OF ALL EYEBOLTS; TIGHTEN WASHERS AGAINST EYE-BOLTS ON BOTH SIDES.
19. TRIM ALL BOLTS TO WITHIN 1" OF THEIR LOCKNUT.
20. BURIED DUCT SHALL BE EMBEDDED 60" TO TOP OF DUCT. DUCTS SHALL BE INSTALLED WITHOUT SPLICING (CONTINUOUS FROM JUNCTION BOX TO JUNCTION BOX). WHERE FIELD CONDITIONS NECESSITATE SPLICING; SPLICING SHALL BE THERMAL WELDING (BUTT WELDING). MECHANICAL DUCT SPLICES ARE PROHIBITED.
21. CLEARING IS REQUIRED FOR ALL NEW OH POWER LINES INSTALLED. PROVIDE 15' VERTICAL CLEARING ON EACH SIDE OF NEW OH LINES, OR TO EDGE OF R-O-W.
22. CLEARING AND GRUBBING ARE REQUIRED FOR ALL NEW UG FACILITIES. CLEAR AND GRUB 7.5' ON EACH SIDE OF UG LINES, OR TO EDGE OF R-O-W.
23. COORDINATE SCHEDULED CONSTRUCTION WITH ADOT+PF ROAD CONSTRUCTION WORK.
24. REQUEST LOCATES PRIOR TO DIGGING.
25. MINIMIZE DURATION AND QUANTITY OF OUTAGES. COORDINATE OUTAGES WITH AVEC AND AIRPORT OPERATIONS.

SYMBOL LEGEND

- EXISTING POLE
- NEW POLE
- EXISTING GUY AND ANCHOR
- NEW GUY AND ANCHOR
- SPAN GUY
- EXISTING OVERHEAD PRIMARY
- NEW/RELOCATED OVERHEAD PRIMARY
- NEW UNDERGROUND PRIMARY
- EXISTING/ABANDONED UNDERGROUND PRIMARY

100% NOT FOR CONSTRUCTION

LINE RELOCATION LAYOUT & GENERAL NOTES

Preliminary Plans

PLANS DEVELOPED BY: EEE, LLC, PO BOX 220471, ANCHORAGE, AK 99522 (907)345-6168
O:\AVEC\Shageluk\Drawings\eee28-U1-LAYOUT Wed, Jul/22/20 10:32am

NO.	DATE	REVISION
E	7-23-19	ISSUED FOR REVIEW
F	7-1-20	REVIEW PS&E
G	7-22-20	REVIEW PS&E - REV 1

STATE	PROJECT DESIGNATION	YEAR	SHEET NO.	TOTAL SHEETS
ALASKA	NFHWY00186	2017	U2	U10

SHEET NOTES:
1. SEE GENERAL NOTES ON SHEET U1.

SHAGELUK AIRPORT ACCESS RD RECONSTRUCTION, STAGE 1

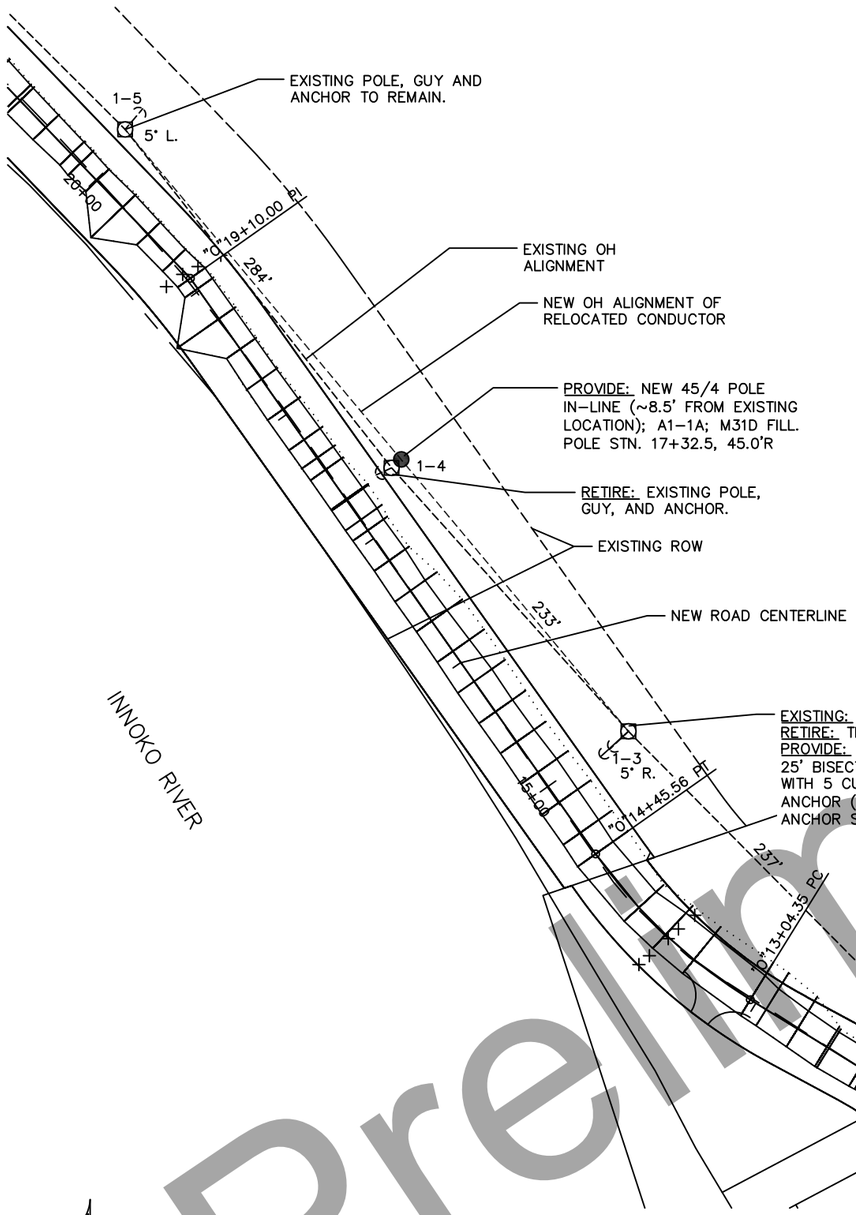

1 U2 ENLARGED LINE RELOCATION LAYOUT "A"
SCALE: SEE GRAPHIC SCALE

50' 25' 0 50' 100'

NOTE: AFTER POLE 1–4 IS REPLACED IN–LINE, RE–TENSION EXISTING CONDUCTOR FROM POLE 1–1 TO POLE 1–5 TO MATCH EXISTING TENSION ACROSS POLE 1–5.

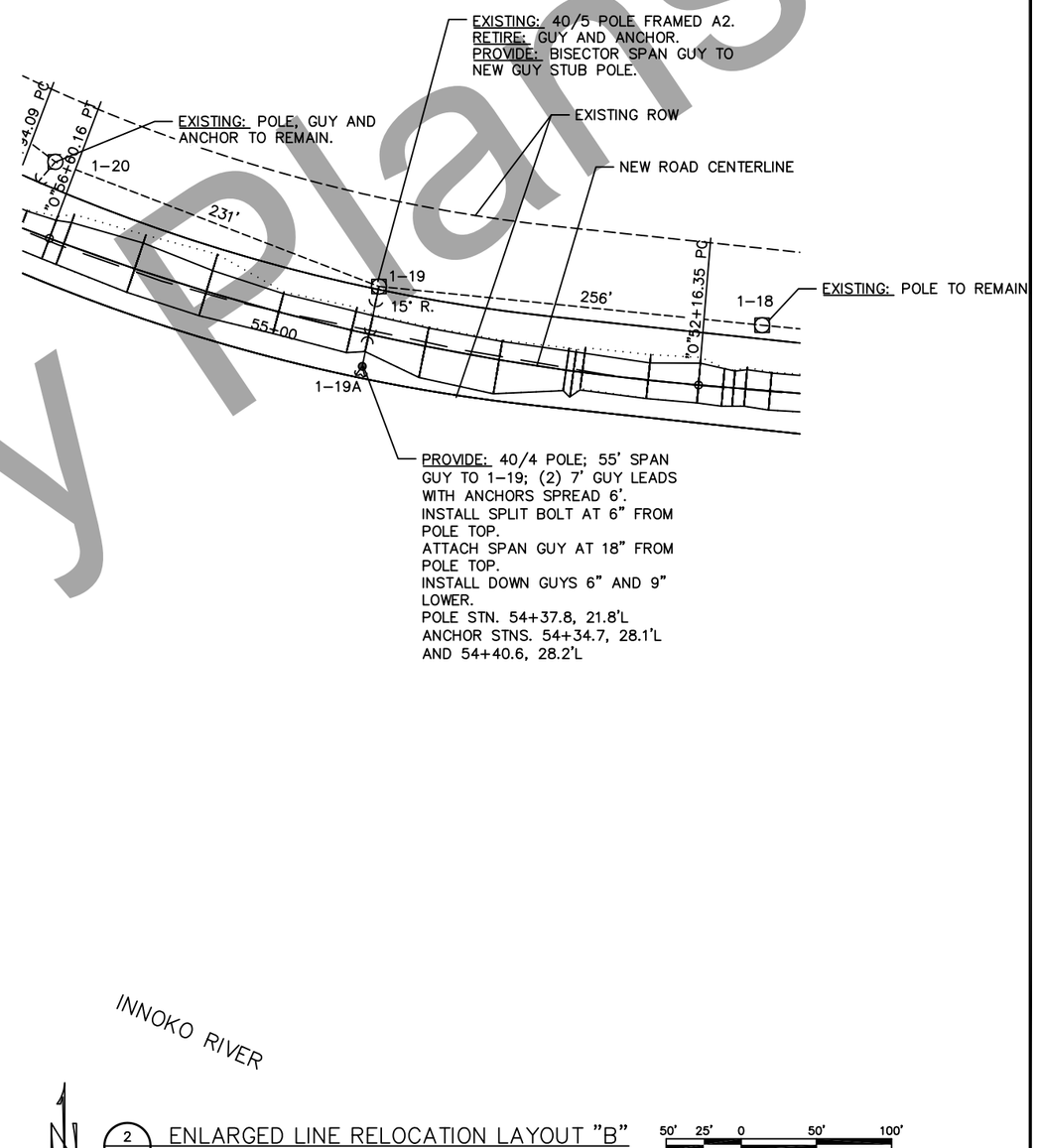

2 U2 ENLARGED LINE RELOCATION LAYOUT "B"
SCALE: SEE GRAPHIC SCALE

50' 25' 0 50' 100'

100% NOT FOR CONSTRUCTION

ENLARGED LINE RELOCATION LAYOUT

Preliminary Plans

PLANS DEVELOPED BY: EEE, LLC, PO BOX 220471, ANCHORAGE, AK 99522 (907)345–6168
O:\AVEC\Shageluk\Drawings\eee28–U2–ENLARGED Wed, Jul/22/20 10:34am

NO.	DATE	REVISION
C	12-30-17	ISSUED FOR REVIEW
D	3-7-19	ISSUED FOR REVIEW
E	7-1-20	REVIEW PS&E

STATE	PROJECT DESIGNATION	YEAR	SHEET NO.	TOTAL SHEETS
ALASKA	NFHWY00186	2017	U3	U10

SHAGELUK AIRPORT ACCESS RD RECONSTRUCTION, STAGE 1

SHEET NOTES:
1. SEE GENERAL NOTES ON SHEET U1.

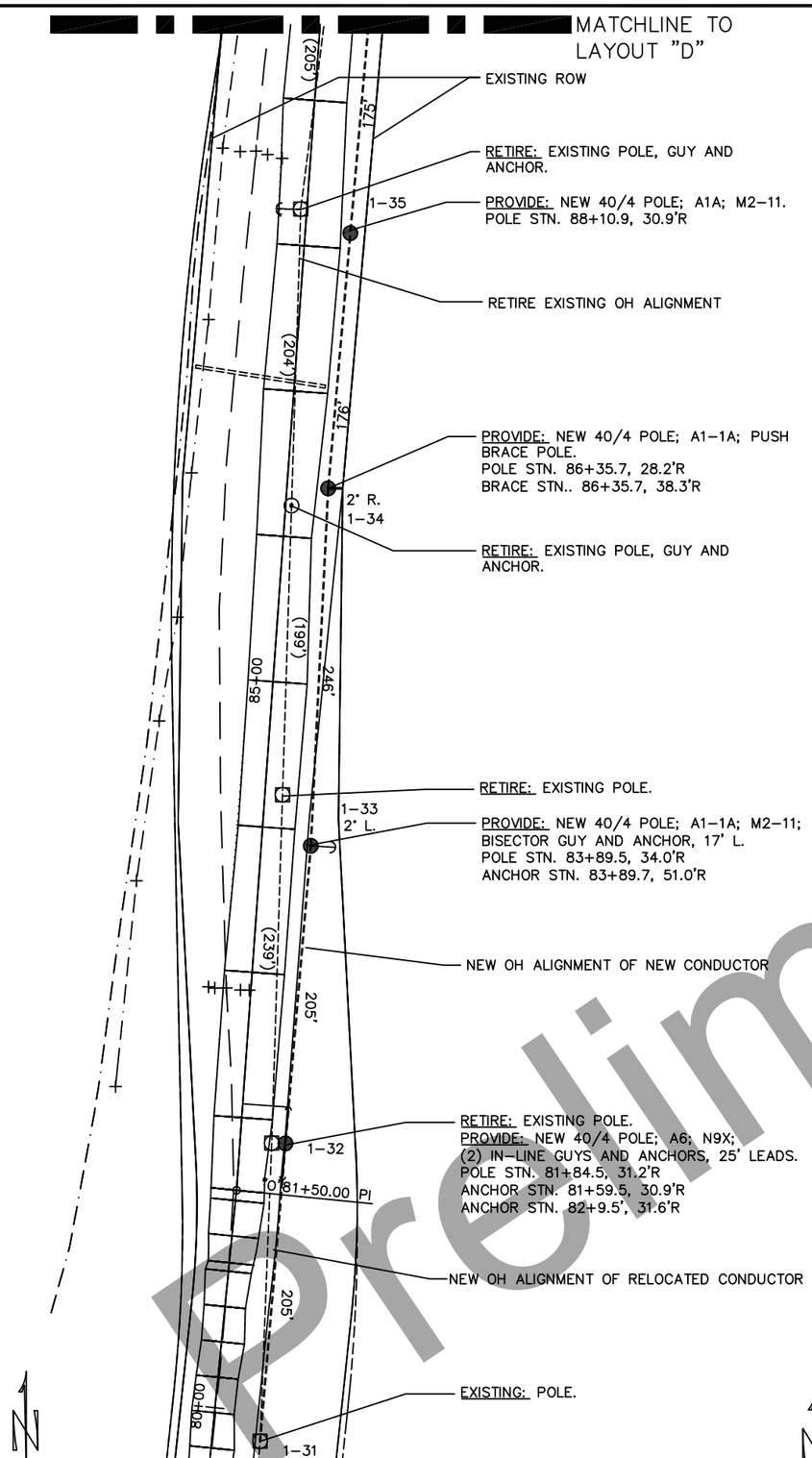

1 U3 ENLARGED LINE RELOCATION LAYOUT "C"
SCALE: SEE GRAPHIC SCALE 50' 25' 0 50' 100'

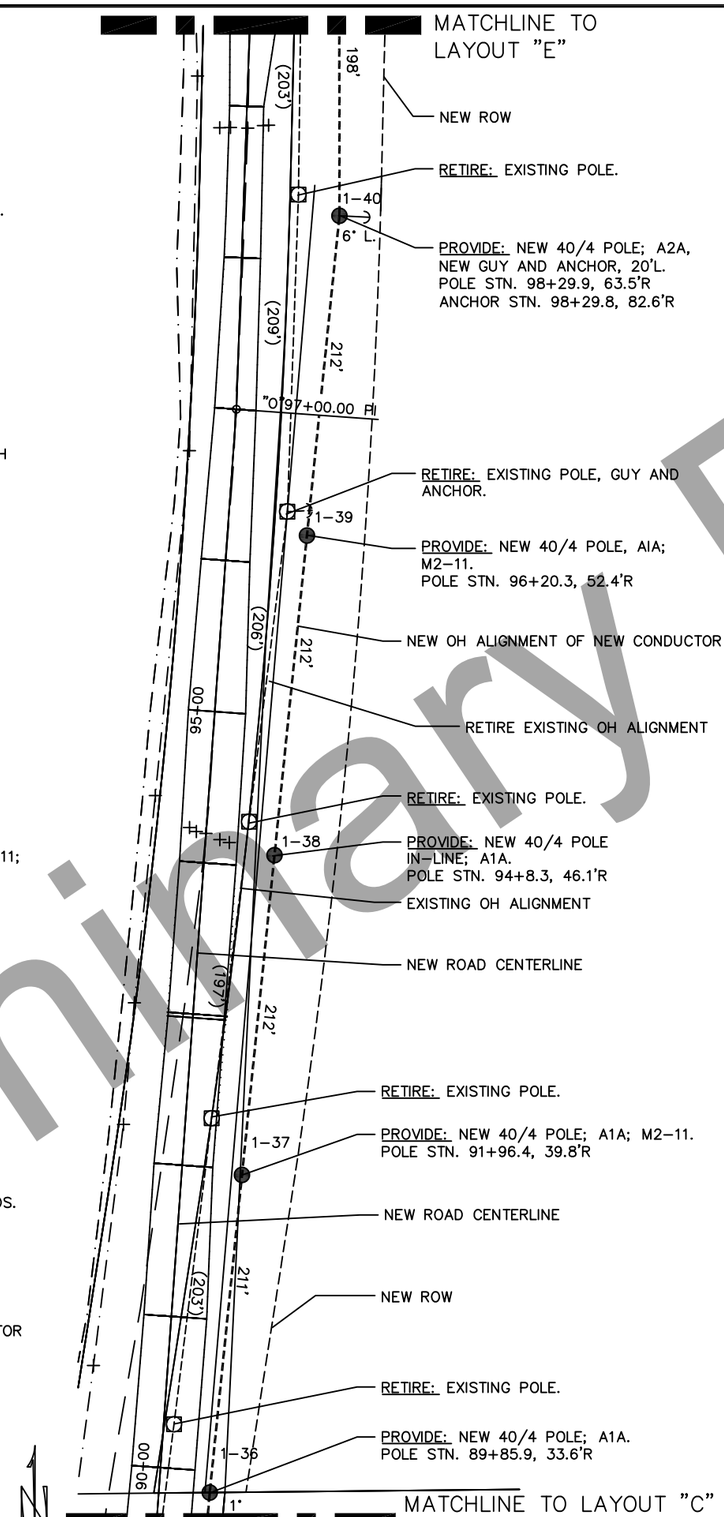

2 U3 ENLARGED LINE RELOCATION LAYOUT "D"
SCALE: SEE GRAPHIC SCALE 50' 25' 0 50' 100'

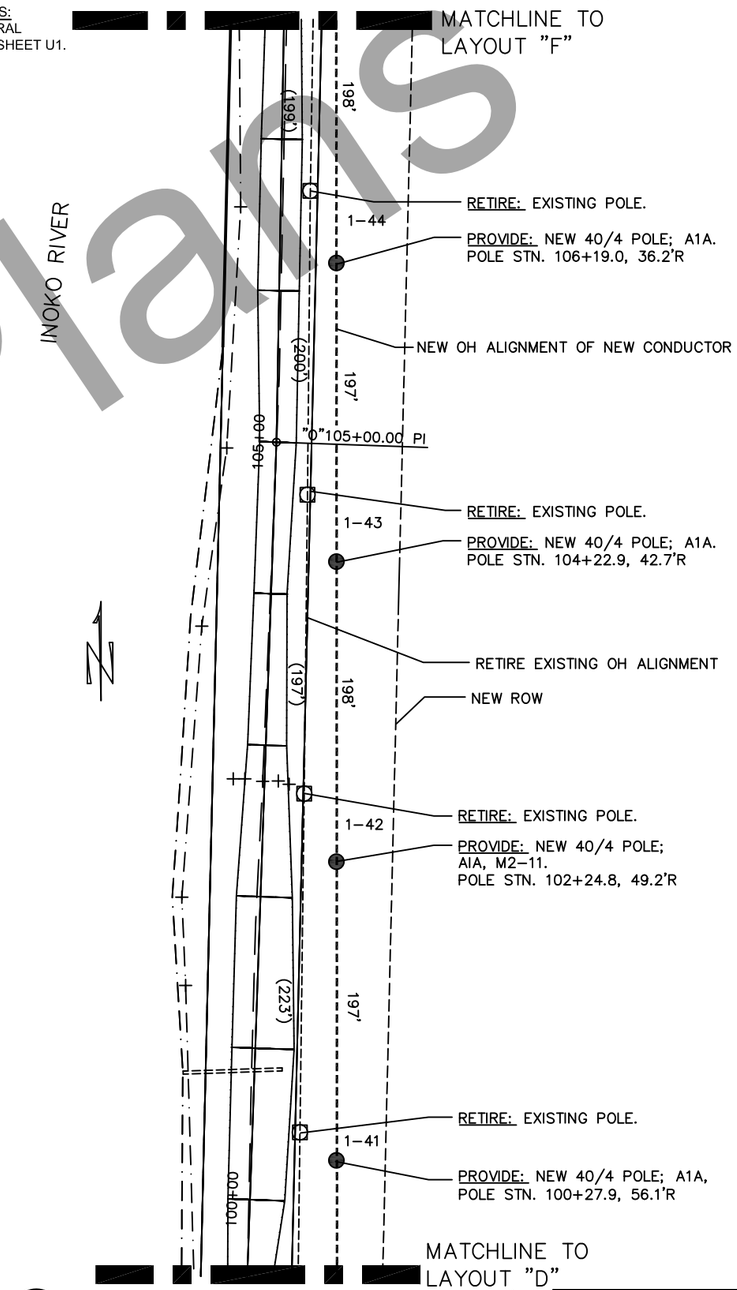

3 U3 ENLARGED LINE RELOCATION LAYOUT "E"
SCALE: SEE GRAPHIC SCALE 50' 25' 0 50' 100'

100% NOT FOR CONSTRUCTION

ENLARGED LINE RELOCATION LAYOUTS

Preliminary Plans

PLANS DEVELOPED BY: EEE, LLC, PO BOX 220471, ANCHORAGE, AK 99522 (907)345-6168
O:\AVEC\Shageluk\eee26-U3-ENLARGED Thu, Jul/02/20 01:51am

SHEET NOTES:
1. SEE GENERAL NOTES ON SHEET U1.
2. EXACT LOCATION OF ROAD CROSSING AND ROUTING OF EXISTING UNDERGROUND CONDUCTOR BETWEEN JUNCTION BOXES IS UNKNOWN. COORDINATE WITH ROAD CONTRACTOR TO PROTECT CABLES. CROSSINGS BELIEVED TO EXIST NEAR STATIONS 127+50 AND 135+00.

NO.	DATE	REVISION
D	3-7-19	ISSUED FOR REVIEW
E	7-1-20	REVIEW PS&E
F	7-22-20	REVIEW PS&E - REV 1

STATE	PROJECT DESIGNATION	YEAR	SHEET NO.	TOTAL SHEETS
ALASKA	NFHWY00186	2017	U4	U10

SHAGELUK AIRPORT ACCESS RD RECONSTRUCTION, STAGE 1

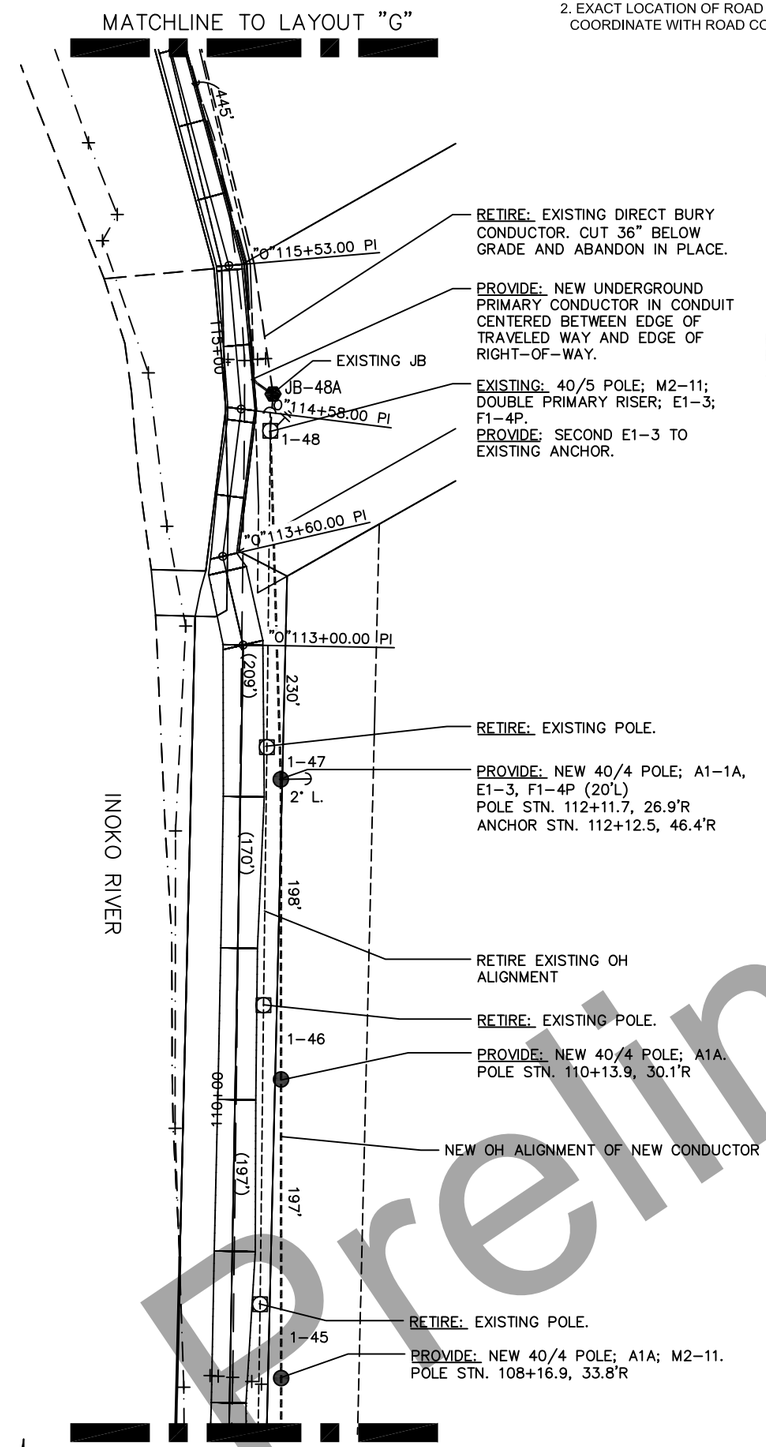

1 U4 ENLARGED LINE RELOCATION LAYOUT "F"
SCALE: SEE GRAPHIC SCALE 50' 25' 0 50' 100'

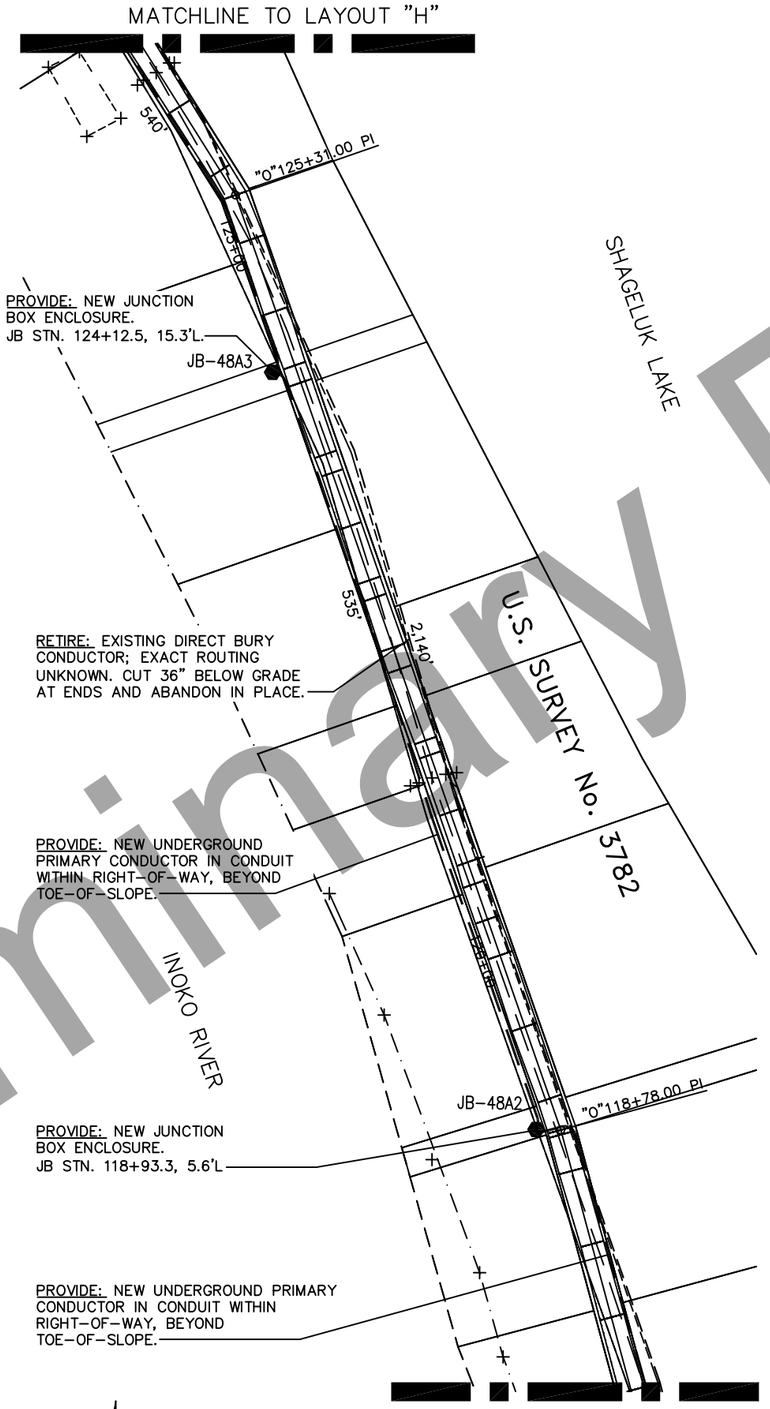

2 U4 ENLARGED LINE RELOCATION LAYOUT "G"
SCALE: SEE GRAPHIC SCALE 50' 25' 0 50' 100'

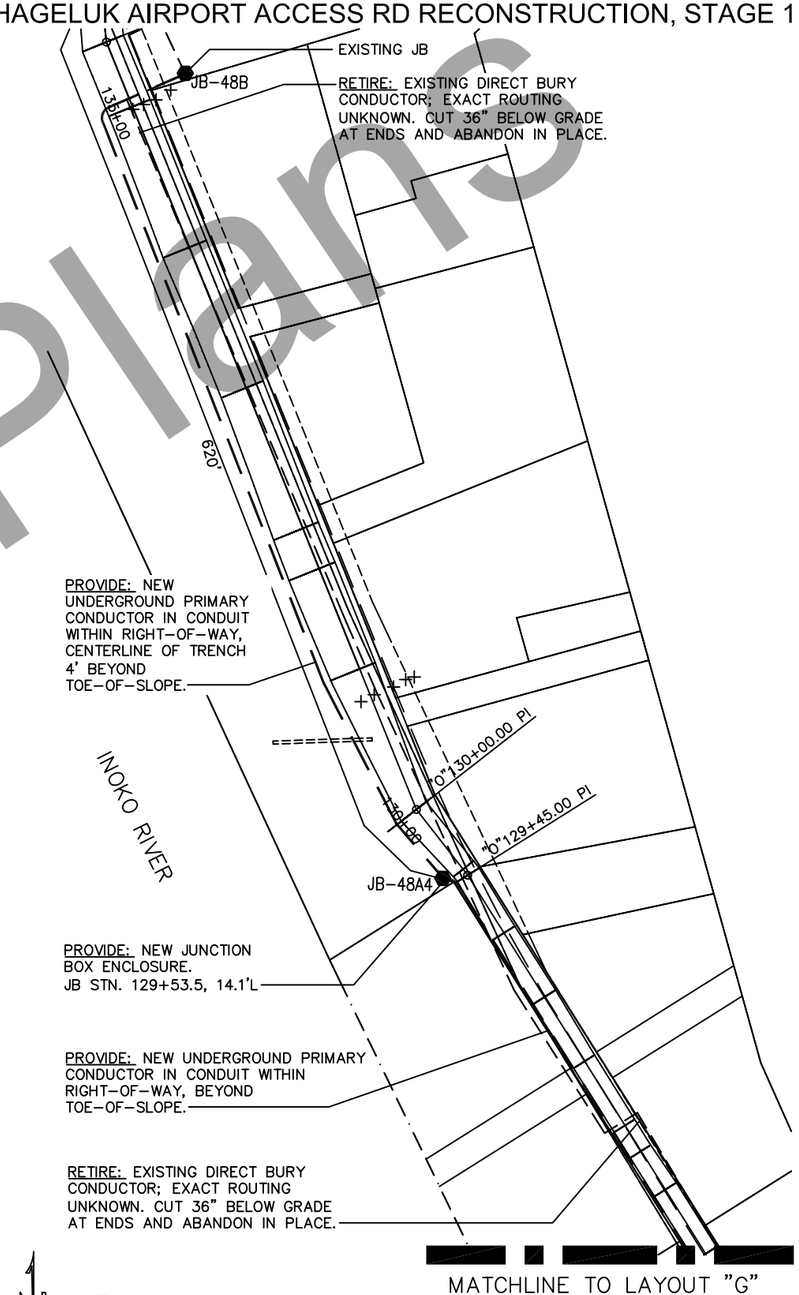

3 U4 ENLARGED LINE RELOCATION LAYOUT "H"
SCALE: SEE GRAPHIC SCALE 50' 25' 0 50' 100'

100% NOT FOR CONSTRUCTION

ENLARGED LINE RELOCATION LAYOUTS

Preliminary Plans

PLANS DEVELOPED BY: EEE, LLC, PO BOX 220471, ANCHORAGE, AK 99522 (907)345-6168
O:\AVEC\Shageluk\Drawings\eee28-U4-ENLARGED Wed, Jul/22/20 10:35am

SHEET NOTES:
1. SEE GENERAL NOTES ON SHEET U1.
2. EXACT LOCATION OF ROAD CROSSING AND ROUTING OF EXISTING UNDERGROUND CONDUCTOR BETWEEN JUNCTION BOXES IS UNKNOWN. COORDINATE WITH ROAD CONTRACTOR TO PROTECT CABLES. CROSSINGS BELIEVED TO EXIST NEAR STATIONS 127+50 AND 135+00.

NO.	DATE	REVISION
A	7-1-20	REVIEW PS&E

STATE	PROJECT DESIGNATION	YEAR	SHEET NO.	TOTAL SHEETS
ALASKA	NFHWY00186	2017	U5	U10

SHAGELUK AIRPORT ACCESS RD
RECONSTRUCTION, STAGE 1

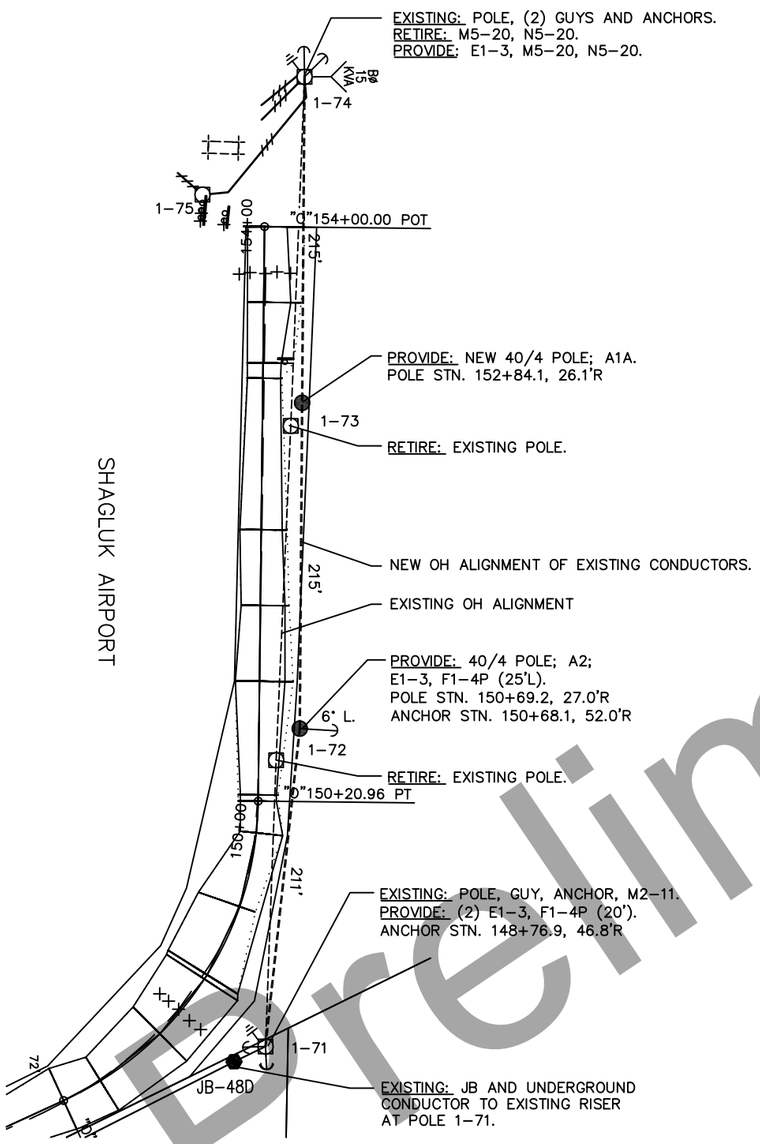

1 / U5 ENLARGED LINE RELOCATION LAYOUT "I"
SCALE: SEE GRAPHIC SCALE 50' 25' 0 50' 100'

Preliminary Plans

100% NOT FOR CONSTRUCTION

ENLARGED LINE
RELOCATION LAYOUTS

PLANS DEVELOPED BY: EEE, LLC, PO BOX 220471, ANCHORAGE, AK 99522 (907)345-6168
O:\AVEC\Shageluk\eee26-U5-ENLARGED Thu, Jul/02/20 01:52am

NO.	DATE	REVISION
B	3-19-17	ISSUED FOR REVIEW
C	12-30-17	ISSUED FOR REVIEW
D	7-1-20	REVIEW PS&E

STATE	PROJECT DESIGNATION	YEAR	SHEET NO.	TOTAL SHEETS
ALASKA	NFHWY00186	2017	U6	U10

SHAGELUK AIRPORT ACCESS RD RECONSTRUCTION, STAGE 1

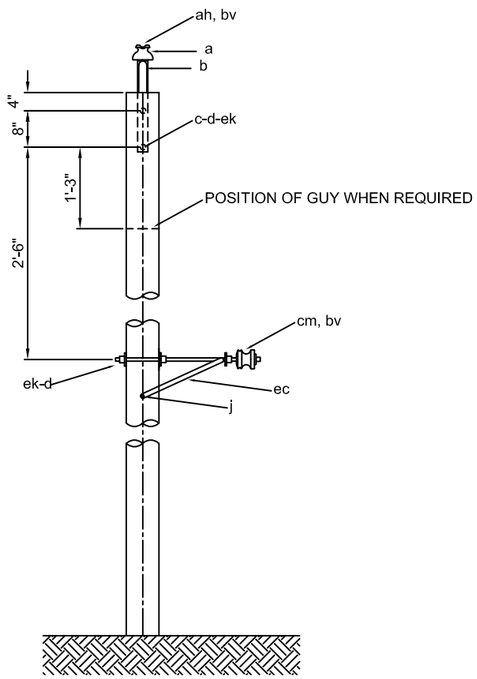

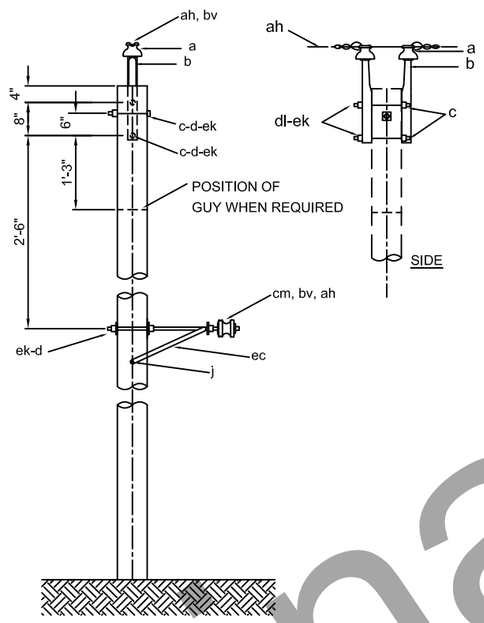

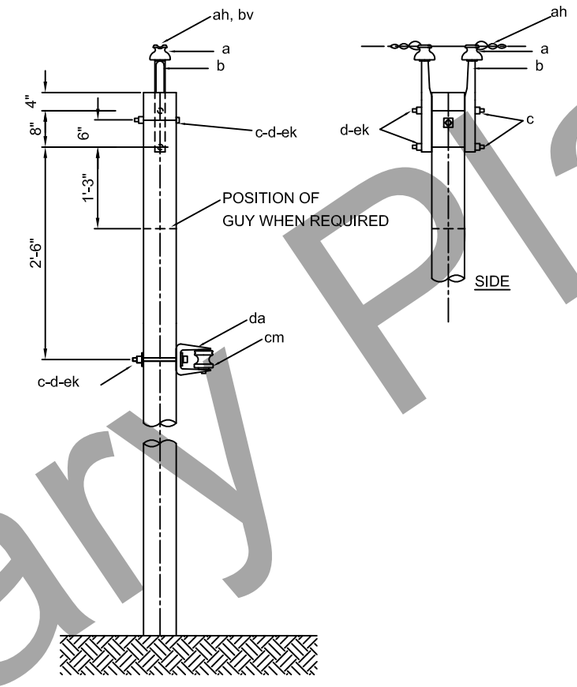

NOTE:
1. THIS ASSEMBLY: USES A 3" SQUARE CURVED WASHERS (1 REQUIRED ON BACKSIDE OF NEUTRAL RIGID CLEVIS).

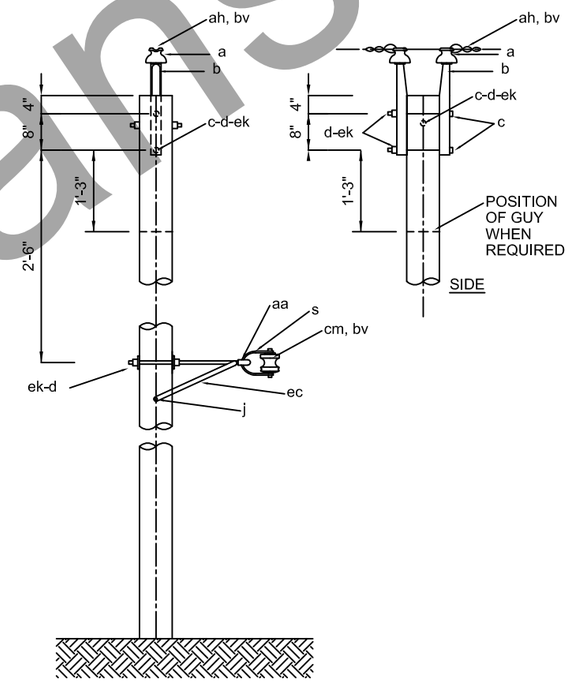

NOTE:
1. THIS ASSEMBLY: USES A 3" SQUARE CURVED WASHERS (1 REQUIRED ON BACKSIDE OF NEUTRAL OFFSET BRACKET).

MATERIAL LIST

NO.	Qty.	DESCRIPTION
a	1	INSULATOR, PIN TYPE, PORCELAIN, F-NECK, ANSI 55-4
b	1	PIN, POLE TOP, 20", STRAIGHT
ah	1	TIE, WRAPLOCK, SINGLE SUPPORT, PREFORMED WTF-0219
ah	1	TIE, SPOOL, PREFORMED SPL-1359-P
bv	2	ARMOR ROD, SINGLE SUPPORT, PREFORMED AR-0114
c	2	BOLT, MACHINE, 5/8" x REQ'D LENGTH
cm	1	INSULATOR, SPOOL, 3", VICTOR #VI 2612, ANSI 53-2
d	3	WASHER, 2-1/4" SQUARE WITH 11/16" HOLE
ec	1	BRACKET, OFFSET NEUTRAL, CHANCE C2060004
ek	–	LOCKNUT, 5/8", AS REQUIRED
j	2	SCREW, LAG, 1/2" X 4-1/2"

1 U6 A1A
SCALE: NTS

MATERIAL LIST

NO.	Qty.	DESCRIPTION
a	2	INSULATOR, PIN TYPE, PORCELAIN, F-NECK, ANSI 55-4
b	2	PIN, POLE TOP, 20", STRAIGHT
ah	1	TIE, WRAPLOCK, DOUBLE SUPPORT, PREFORMED DST-0157
ah	1	TIE, SPOOL, PREFORMED SPL-1359-P
bv	1	ARMOR ROD, DOUBLE SUPPORT, PREFORMED AR-0314
bv	1	ARMOR ROD, SINGLE SUPPORT, PREFORMED AR-0114
c	3	BOLT, MACHINE, 5/8" x REQ'D LENGTH
cm	1	INSULATOR, SPOOL, 3", VICTOR #VI 2612, ANSI 53-2
d	3	WASHER, 2-1/4" SQUARE WITH 11/16" HOLE
dl	2	PIPE SPACER, 3/4" DIA. x 1-1/2"
ec	1	BRACKET, OFFSET NEUTRAL, CHANCE C2060004
ek	–	LOCKNUT, 5/8", AS REQUIRED
j	2	SCREW, LAG, 1/2" X 4-1/2"

2 U6 A1-1A
SCALE: NTS

MATERIAL LIST

NO.	Qty.	DESCRIPTION
a	2	INSULATOR, PIN TYPE, PORCELAIN, F-NECK, ANSI 55-4
b	2	PIN, POLE TOP, 20"
ah	1	TIE, WRAPLOCK, DOUBLE SUPPORT, SIDE TIE, PREFORMED DBST-1107
ah	1	TIE, SPOOL, PREFORMED SPL-1359-P
c	4	BOLT, MACHINE, 5/8" x REQ'D LENGTH
d	1	WASHER, CURVED, 3"
d	2	WASHER, 2-1/4" SQUARE WITH 13/16" HOLE
da	1	BRACKET, OFFSET NEUTRAL, CHANCE C2060004
dl	2	PIPE SPACER, 3/4" DIA. x 1-1/2"
ek	–	LOCKNUT, 5/8", AS REQUIRED
cm	1	INSULATOR, SPOOL, 3", VICTOR #VI 2612, ANSI 53-2
bv	1	ARMOR ROD, DOUBLE SUPPORT, PREFORMED AR-0314
bv	1	ARMOR ROD, SINGLE SUPPORT, PREFORMED AR-0114

3 U6 A2
SCALE: NTS

MATERIAL LIST

NO.	Qty.	DESCRIPTION
a	2	INSULATOR, PIN TYPE, PORCELAIN, F-NECK
aa	1	NUT, EYE, 5/8"
b	2	PIN, POLE TOP, 20", STRAIGHT
bv	1	ARMOR ROD, DOUBLE SUPPORT, PREFORMED AR-0314
bv	1	ARMOR ROD, SINGLE SUPPORT, PREFORMED AR-0114
ah	1	TIE, WRAPLOCK, DOUBLE SUPPORT, SIDE TIE, PREFORMED DBST-1107
ah	1	TIE, SPOOL, PREFORMED SPL-1359-P
c	3	BOLT, MACHINE, 5/8" x REQ'D LENGTH
cm	1	INSULATOR, SPOOL, 3", VICTOR #VI 2612, ANSI 53-2
d	2	WASHER, 2-1/4" SQUARE WITH 11/16" HOLE
ec	1	BRACKET, OFFSET NEUTRAL, CHANCE C2060004
dl	2	PIPE SPACER, 3/4" DIA. x 1-1/2"
ek	–	LOCKNUT, 5/8", AS REQUIRED
j	2	SCREW, LAG, 1/2" X 4-1/2"
s	1	CLEVIS, SWINGING, MACLEAN #GD-J0322
d	1	WASHER, SQUARE, CURVED, 3", 11/16" HOLE

4 U6 A2A
SCALE: NTS

100% NOT FOR CONSTRUCTION

LINE RELOCATION DETAILS

Preliminary Plans

PLANS DEVELOPED BY: EEE, LLC, PO BOX 220471, ANCHORAGE, AK 99522 (907)345-6168
O:\AVEC\Shageluk\eee26-U6-DETAILS Thu, Jul/02/20 01:52am

NO.	DATE	REVISION
C	12-30-17	ISSUED FOR REVIEW
D	7-1-20	REVIEW PS&E
E	7-22-20	REVIEW PS&E - REV 1

STATE	PROJECT DESIGNATION	YEAR	SHEET NO.	TOTAL SHEETS
ALASKA	NFHWY00186	2017	U7	U10

SHAGELUK AIRPORT ACCESS RD RECONSTRUCTION, STAGE 1

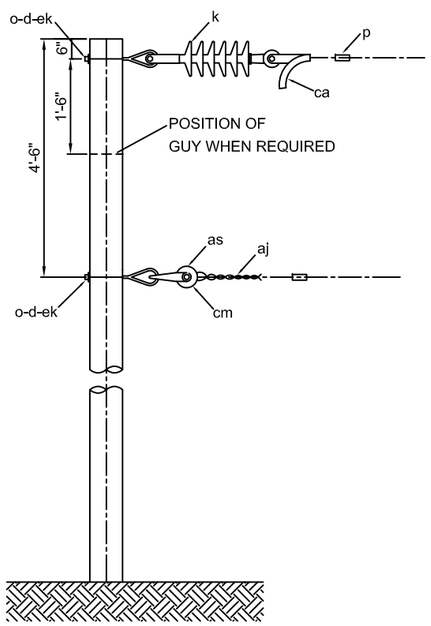

NOTE:
1. THIS ASSEMBLY: USES 3" SQUARE CURVED WASHERS (4 REQUIRED).
2. TIGHTEN EYE-BOLT AGAINST WASHERS ON BOTH SIDES OF POLE.

MATERIAL LIST		
NO.	Qty.	DESCRIPTION
ca	1	DEADEND, BOLTED, QUADRANT SHOE, HUBBELL #PG57N
as	1	CLEVIS, SWINGING, MACLEAN #GD–J0322
d	4	WASHER, SQUARE CURVED, 3"
ek	–	LOCKNUTS, AS REQUIRED
k	1	INSULATOR, POLYMER, SUSPENSION, 25 kV, (15,000 lb)
o	2	BOLT, EYE, 5/8" x AS REQUIRED
cm	1	INSULATOR, SPOOL, 3", VICTOR #VI 2612, ANSI 53–2
aj	1	GRIP, DEADEND, #2 ACSR, PREFORMED #DG–4542
p	–	CONNECTORS, COMPRESSION, H–TAP, AS REQ'D

1 U7 A5
SCALE: NTS

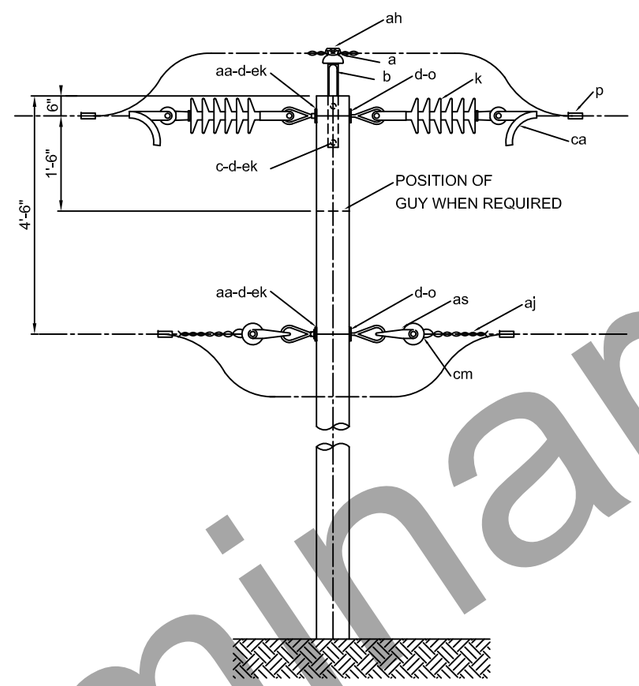

NOTE:
1. THIS ASSEMBLY: USES 3" SQUARE CURVED WASHERS (4 REQUIRED).
2. TIGHTEN EYE-BOLT AGAINST WASHERS ON BOTH SIDES OF POLE.

MATERIAL LIST		
NO.	Qty.	DESCRIPTION
a	1	INSULATOR, PIN TYPE, PORCELAIN, F–NECK
aa	2	NUT, EYE, 5/8"
ah	–	TIE, WIRE, #4 BARE SOLID ALUMINUM
aj	2	GRIP, DEADEND, #2 ACSR, PREFORMED #DG–4542
as	2	CLEVIS, SWINGING, MACLEAN #GD–J0322
b	1	PIN, POLE TOP, 20" STRAIGHT
c	2	BOLT, MACHINE, 5/8" x REQ'D LENGTH
ca	2	DEADEND, BOLTED, QUADRANT SHOE, HUBBELL #PG57N
cm	2	INSULATOR, SPOOL, 3", VICTOR #VI 2612, ANSI 53–2
d	2	WASHER, 2 1/4" SQUARE, 11/16 HOLE
d	4	WASHER, SQUARE CURVED, 3"
ek	–	LOCKNUTS, AS REQUIRED
k	2	INSULATOR, POLYMER, SUSPENSION, 25 kV, (15,000 lb)
o	2	BOLT, EYE, 5/8" x AS REQUIRED
p	–	CONNECTORS, COMPRESSION, H–TAP, AS REQ'D

2 U7 A6
SCALE: NTS

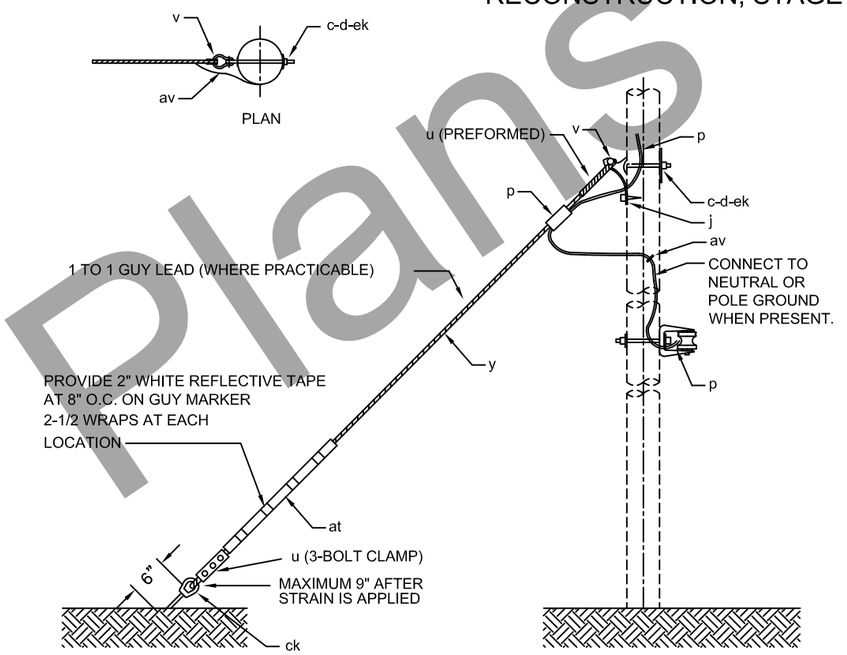

NOTES:
1. FORMED TYPE GRIPS TO BE USED ONLY AT POLE, WITH SUITABLE ATTACHMENTS.
2. WHERE SEPARATE ANCHORS ARE INSTALLED THE MINIMUM SEPARATION SHALL BE FIVE FEET.
3. SPACING BETWEEN ANCHORS SHALL BE SUFFICIENT TO PROVIDE MAXIMUM HOLDING POWER OF EACH ANCHOR.

MATERIAL LIST		
Item	QTY	DESCRIPTION
c	1	BOLT, MACHINE, 3/4" X REQ'D LENGTH
d	1	WASHER, STEEL, 4" SQUARE, STEEL, 3/8 THICK, CURVED, 13/16" HOLE
ek	1	LOCKNUTS, 3/4"
j	1	SCREW, LAG 1/2' x 4"
p	–	CONNECTORS, COMPRESSION, AS REQUIRED
u	1	DEADEND, PREFORMED, GUY, PREFORMED #GDE–1108 (AT POLE)
v	1	GUY CLAMP, HEAVY TYPE, HUBBELL #6461, OR APPROVED EQUAL
y	–	GUY STRAND, 7/16", GALVANIZED STEEL STRAND, EHS, AS REQ'D
al	–	COPPER CLAD STAPLES, AS REQUIRED
av	–	JUMPERS, GOUNDING, AS REQUIRED, #6 BARE SOLID COPPER
at	1	GUY MARKER, 96", 2" DIA. (YELLOW)
ck	1	CLAMP, ANCHOR ROD, BONDING
–	–	2" REFLECTIVE WHITE TAPE, EAGLE ENTERPRISES #HI RF2WH, AS REQUIRED

3 U7 E1–3
SCALE: NTS

100% NOT FOR CONSTRUCTION

LINE RELOCATION DETAILS

Preliminary Plans

PLANS DEVELOPED BY: EEE, LLC, PO BOX 220471, ANCHORAGE, AK 99522 (907)345-6168
O:\AVEC\Shageluk\Drawings\eee28-U7-DETAILS Wed, Jul/22/20 10:36am

NO.	DATE	REVISION
B	3-19-17	ISSUED FOR REVIEW
C	12-30-17	ISSUED FOR REVIEW
D	7-1-20	REVIEW PS&E

STATE	PROJECT DESIGNATION	YEAR	SHEET NO.	TOTAL SHEETS
ALASKA	NFHWY00186	2017	U8	U10

SHAGELUK AIRPORT ACCESS RD
RECONSTRUCTION, STAGE 1

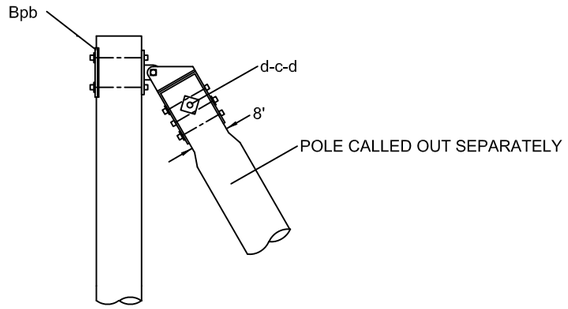

NOTE:
1. THIS ASSEMBLY: USES 3" SQUARE CURVED WASHERS (2 REQUIRED).

MATERIAL LIST		
NO.	Qty.	DESCRIPTION
Bpb	1	PUSH BRACE, INCLUDES FITTINGS, MOUNTING TEE, WASHER PLATE, BOLTS, NUTS, AND LOCKNUTS, HUGHES BROS #3002.
c	1	BOLT, MACHINE, 5/8"x REQ'D LENGTH
d	2	WASHER, SQUARE CURVED, 3", 11/16" HOLE
ek	1	LOCKNUT, 5/8"

2/U8 PUSH BRACE
SCALE: NTS

STAKING SHEET DESIGNATIONS		
ABBREV.	DESCRIPTION	PREFORMED PART #
FTIE	F-NECK WRAPLOCK TIE (FOR ARMORED #2)	WTF-0219
STIE	SPOOL TIE (FOR ARMORED #2)	SPL-1359-P
DBLTIE	F-NECK DOUBLE SIDE TIE (FOR ARMORED #2)	DBST-1107
SARMOR	ARMOR ROD, SINGLE SUPPORT, #2	AR-0114
DARMOR	ARMOR ROD, DOUBLE SUPPORT, #2	AR-0314

4/U8 FRAMING APPURTENANCES
SCALE: NTS

SUBMIT 8" x 4.5" ORANGE AND BLACK WARNING STICKER FOR APPROVAL
BRADY #46346, OR EQUAL

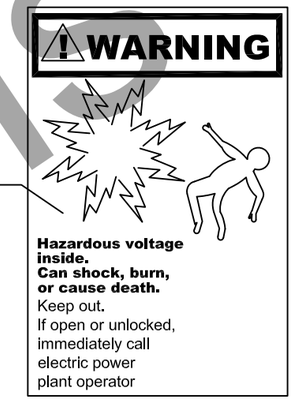

MOUNT OUTSIDE EQUIPMENT ENCLOSURE

SUBMIT 10" x 14" ORANGE AND BLACK DANGER STICKER FOR APPROVAL ACCUFORM REORDER #(VS555)-707349-002, OR EQUAL

MOUNT INSIDE PRIMARY EQUIPMENT ENCLOSURE

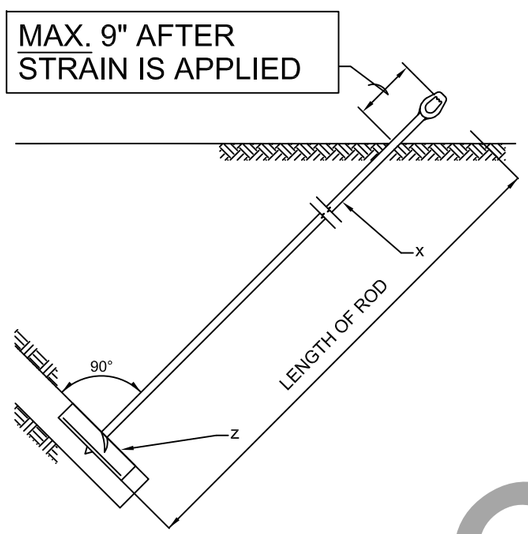

NOTES:
1. PROJECTION AFTER PRELOADING IS 3" - 6" INCHES.
2. THE ANCHOR ROD AND NUTS SHALL BE HOT DIPPED GALVANIZED IN ACCORDANCE WITH ASTM A153.
3. CONTRACTOR SHALL INSTALL ANCHORS IN ACCORDANCE WITH MANUFACTURER'S RECOMMENDATIONS.

MATERIAL LIST	
NO.	DESCRIPTION
x	ROD, ANCHOR, TRIPLE EYE, 3/4" x 8'-0"
z	ANCHOR, PLATE, 24" SQUARE (400 SQ. IN)

1/U8 F1-4P
SCALE: NTS

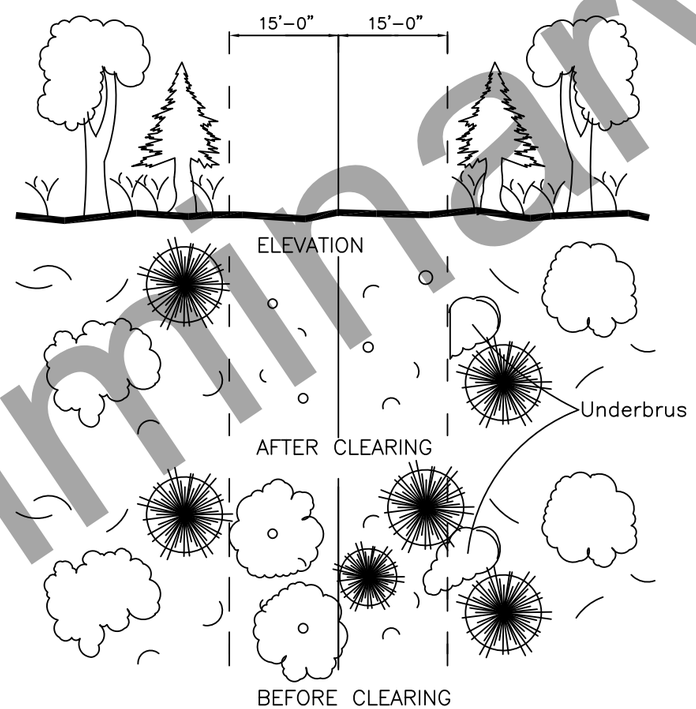

NOTES:
1. ALL LOGS SHALL BE SACKED ALONG THE EDGES OF THE RIGHT-O-WAY. BRUSH SHALL BE CHIPPED OR REMOVED.
2. TREES SHALL BE CUT TO GRADE SO NO STUMPS PROTRUDE IN CLEARING TO ALLOW FOR VEHICULAR TRAVEL.
3. THIS IS A 30' WIDE CLEARING UNIT (15' ON EACH SIDE OF CL).

3/U8 CLEARING
SCALE: NTS

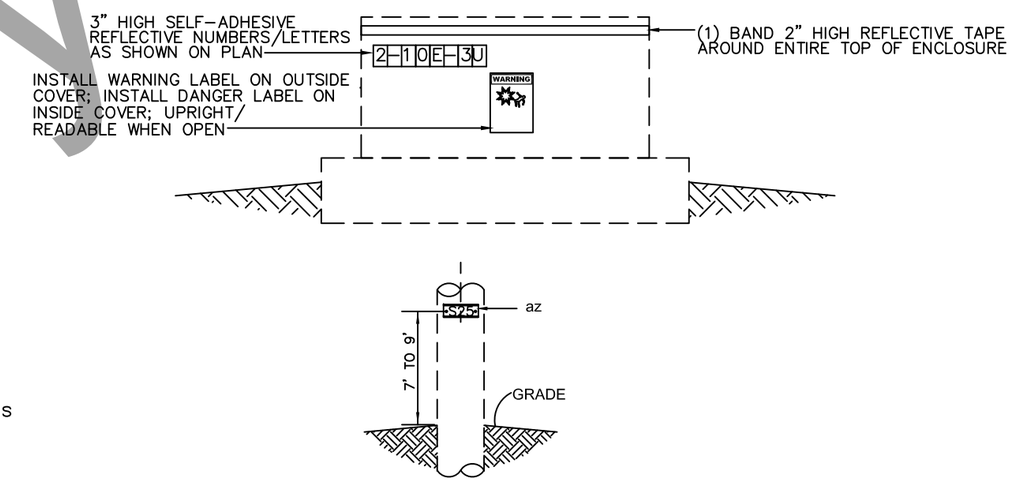

NOTES:
1. POLE NUMBERS TO FACE ROAD.

MATERIAL LIST		
Item	NO.	DESCRIPTION
az	as req'd	POLE NUMBERS AND LETTERS, 1" POLY HOT STAMP ALMATEK
–	1	TAGHOLDER, 1" POLY, #9 FINISH, LENGTH AS REQUIRED
–	2	NAIL, CLOUT, ALUMINUM, 11 OR 12 GAUGE x 1-1/2" LONG

5/U8 M52-3 AND EQUIPMENT NUMBERING
SCALE: NTS

100% NOT FOR CONSTRUCTION

LINE RELOCATION DETAILS

Preliminary Plans

PLANS DEVELOPED BY: EEE, LLC, PO BOX 220471, ANCHORAGE, AK 99522 (907)345-6168
O:\AVEC\Shageluk\eee26-U8-DETAILS Thu, Jul/02/20 01:53am

NO.	DATE	REVISION	STATE	PROJECT DESIGNATION	YEAR	SHEET NO.	TOTAL SHEETS
B	3-19-17	ISSUED FOR REVIEW	ALASKA	NFHWY00186	2017	U9	U10
C	12-30-17	ISSUED FOR REVIEW					
D	7-1-20	REVIEW PS&E					

SHAGELUK AIRPORT ACCESS RD RECONSTRUCTION, STAGE 1

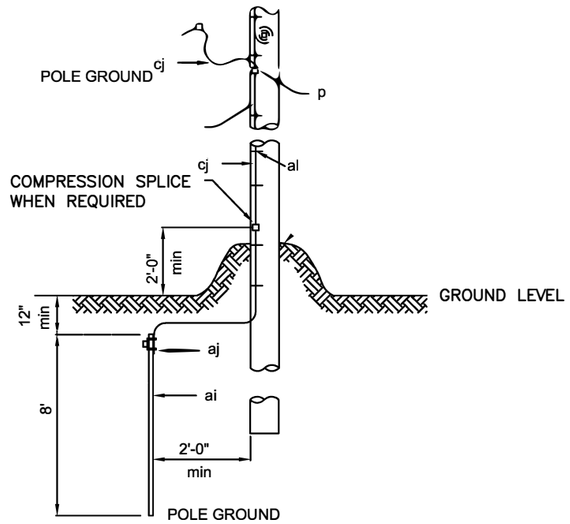

NOTES:
1. POLE GROUND WIRE TO BE LOCATED ON SAME SIDE AS NEUTRAL CONDUCTOR AND IN QUADRANT OPPOSITE CLIMBING SPACE AND ON SIDE OF RISER.
2. STAPLES ON GROUND WIRES SHALL BE 2'-0" APART. EXCEPT FOR A DISTANCE OF 8'-0" ABOVE GROUND AND 8'-0" FROM TOP OF POLE, WHERE THEY SHALL BE 6" APART.
3. GROUND WIRE TO CLEAR ALL HARDWARE BY 2" MINIMUM, AND SHALL BE STAPLED TO MAINTAIN THIS POSITION.
4. GROUND ARRESTORS, TERMINATIONS, ALUMAFORM BRACKET AND RISER PIPE TO POLE GROUND.
5. DOUBLE GROUND RISER PIPE TO POLE GROUND.

MATERIAL LIST

Item	NO.	DESCRIPTION
p	as req'd	CONNECTOR, COMPRESSION
ai	1	ROD, GROUND, COPPER–CLAD STEEL, 5/8" MIN. X 8'
aj	1	GROUND ROD CLAMP
al	AS REQ'D	STAPLES, COPPER
al	1	GROUND WIRE CLIP
ci	AS REQ'D	GROUND WIRE, #6 COPPER
av	AS REQ'D	JUMPER, COPPER

2 U9 M2–11
SCALE: NTS

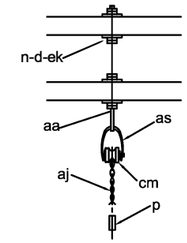

HORIZONTAL FRAMING

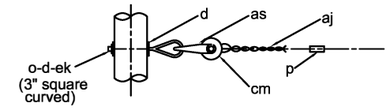

VERTICAL FRAMING

NOTE:
1. THIS ASSEMBLY: USES 3" SQUARE CURVED WASHERS (2 REQUIRED).

MATERIAL LIST

NO.	Qty. H	Qty. V	DESCRIPTION
n	1		BOLT, DA, 5/8" x REQ'D LENGTH
o		1	BOLT, EYE, 5/8" x AS REQUIRED
aa	1		NUT, EYE, 5/8"
ek	–	–	LOCKNUTS, AS REQUIRED
d	4		WASHER, 2–1/4" SQUARE, 11/16" HOLE
d		2	WASHER, SQUARE CURVED, 3", 11/16" HOLE
as	1	1	CLEVIS, SWINGING, MACLEAN #GD–J0322
cm	1	1	INSULATOR, SPOOL, 3", VICTOR #VI 2612, ANSI 53–2
aj	1	1	GRIP, DEADEND, #2 ACSR, PREFORMED #DG–4542
p	–	–	CONNECTORS, COMPRESSION, H–TAP, AS REQ'D

5 U9 N5–20
SCALE: NTS

CABLE TAGGING NOTES:
1. TAG ALL CABLES AT RISERS AND IN JUNCTION BOXES.
2. TAG EVERY CABLE WITH A YELLOW PLASTIC COATED CLOTH TAGS.
3. ATTACH TAGS AT RISERS 12" ABOVE TOP OF CONDUIT. ATTACH TAGS IN JUNCTION BOXES AT 4" BELOW COLD SHRINK SEAL.
4. ALL TAGS SHALL BE SECURELY TAPED TO THE CONDUCTOR WITH 3M #37 OR #88 VINYL ELECTRICAL TAPE.
5. THE DESTINATION (LOCATION OF OTHER END) OF THE CIRCUIT SHALL BE PRINTED LEGIBLY ON EACH TAG WITH A PERMANENT BLACK MARKER.

8 U9 CABLE TAGGING
SCALE: NTS

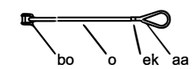

MATERIAL LIST

NO.	Qty.	DESCRIPTION
aa	1	NUT, EYE, 5/8"
bo	1	SHACKLE, ANCHOR
ek	1	LOCKNUT, 5/8"
o	1	BOLT, EYE, 5/8" x 18"

7 U9 M5–21
SCALE: NTS

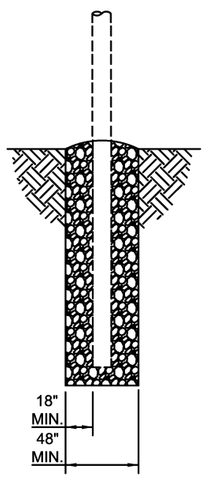

NOTES:
1. IMPORTED BACKFILL IS REQUIRED AT SOME POLE LOCATIONS WHERE NATIVE MATERIAL WILL NOT ADEQUATELY SUPPORT THE POLE.
2. BACKFILL SHALL BE NON FROST-SUSCEPTIBLE (NFS) MATERIAL: WELL-GRADED GRAVEL, GRAVEL-SAND MIXTURE WITH LITTLE TO NO FINES, GROUP GW AS DEFINED BY THE UNIFIED SOIL CLASSIFICATION SYSTEM.
3. TYPICAL QUANTITY REQUIRED IS ~5-6 CUBIC YARDS BUT MAY VARY DEPENDING ON POLE AND HOLE SIZE.

1 U9 M31D
SCALE: NTS

MATERIAL LIST

NO.	Qty.	DESCRIPTION
–	1	VIBRATION DAMPER, SPIRAL,
		PREFORMED #5050103

3 U9 VIBRATION DAMPENER
SCALE: NTS

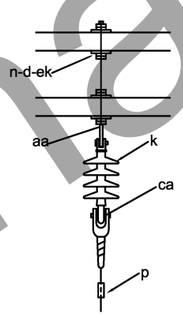

HORIZONTAL FRAMING

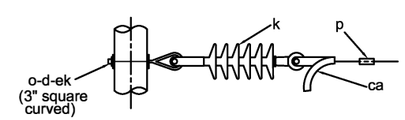

VERTICAL FRAMING

NOTE:
1. THIS ASSEMBLY: USES 3" SQUARE CURVED WASHERS (2 REQUIRED).

MATERIAL LIST

NO.	Qty. H	Qty. V	DESCRIPTION
n	1		BOLT, DA, 5/8" x REQ'D LENGTH
o		1	BOLT, EYE, 5/8" x AS REQUIRED
aa	1		NUT, EYE, 5/8"
ek	–	–	LOCKNUTS, AS REQUIRED
d	4		WASHER, 2–1/4" SQUARE, 11/16" HOLE
d		2	WASHER, SQUARE CURVED, 3", 11/16" HOLE
k	1	1	INSULATOR, POLYMER, SUSPENSION, 25 kV, (15,000 lb)
ca	1	1	DEADEND, BOLTED, QUADRANT SHOE, HUBBELL #PG57N
p	–	–	CONNECTORS, COMPRESSION, H–TAP, AS REQ'D

4 U9 M5–20
SCALE: NTS

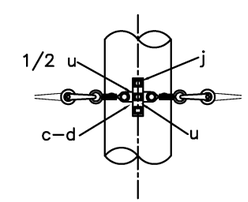

ELEVATION

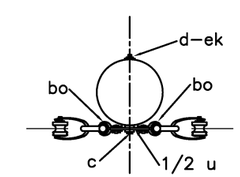

SECTION A–A

MATERIAL LIST

Item	NO.	DESCRIPTION
c	1	BOLT, MACHINE, 5/8" X REQ'D LENGTH
d	1	WASHER, 2–1/4" SQUARE, 11/16" HOLE
j	2	SCREW, LAG, 1/2" x 4"
u	1 1/2	CLAMP, GUY, 6" HEAVY DUTY
bo	4	ANCHOR SHACKLE, 5/8"
ek		LOCKNUTS AS REQUIRED

6 U9 N9X
SCALE: NTS

100% NOT FOR CONSTRUCTION

LINE RELOCATION DETAILS

Preliminary Plans

PLANS DEVELOPED BY: EEE, LLC, PO BOX 220471, ANCHORAGE, AK 99522 (907)345-6168
O:\WEC\Shageluk\eee26-U9-DETAILS Thu, Jul/02/20 01:53am

NO.	DATE	REVISION	STATE	PROJECT DESIGNATION	YEAR	SHEET NO.	TOTAL SHEETS
A	7-1-20	REVIEW PS&E	ALASKA	NFHWY00186	2017	U10	U10

SHAGELUK AIRPORT ACCESS RD RECONSTRUCTION, STAGE 1

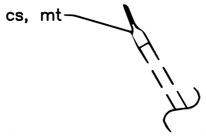

NOTES:
1. APPLY MASTIC TAPE WRAPS AROUND CABLE AND DUCT PRIOR TO INSTALLING COLD SHRINK

MATERIAL LIST		
Item	Qty	DESCRIPTION
cs	–	COLD SHRINK, 3M CPT–1 1/4, OR APPROVED EQUAL
mt	–	MASTIC TAPE (3 WRAPS ON CABLE, 1–1/2 WRAP ON DUCT), 3M COMPOUND 2229, OR APPROVED EQUAL

2/U10 CNDT–SEAL: PRIMARY CABLE TO CONDUIT SEAL
SCALE: NTS

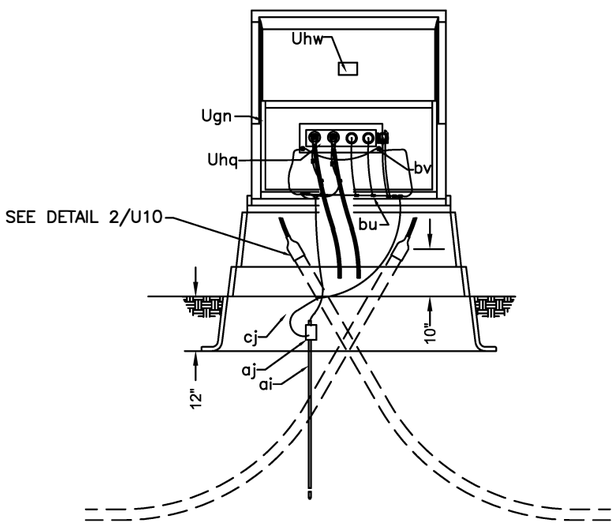

NOTES:
1. PROVIDE A FULL COIL OF CABLE IN BOTTOM OF CABINET FOR EACH CABLE.
2. TAG ALL CABLES PER CABLE TAGGING DETAIL.

MATERIAL LIST		
Item	Qty	DESCRIPTION
ai	1	ROD, GROUND, 5/8" X 8'–0", COPPER CLAD
aj	1	CONNECTION, GROUND ROD CLAMP
bu	–	COMPRESSION CONNECTOR, COPPER, BURNDY YGHC2C2, OR APPROVED EQUAL, AS REQ'D
bv	2	LUG, INSERT PLATE GROUNDING, BURNDY K2C25 OR APPROVED EQUAL
cj	–	GROUND WIRE, #2 BaCuStr, AS REQ'D
Ugn	1	DEADFRONT CABLE JUNCTION PEDESTAL, WITH STAINLESS STEEL JUNCTION MOUNTING PLATE NORDIC FIBERGLASS ND–362454–MG–S110–X–X
Uhw	1 EA.	SIGNS, "DANGER" AND "WARNING" AND "ARC FLASH"
Uhq	1	MODULE, FEED–THRU, MULTIPOINT, 4–POSITION W/ STAINLESS STEEL "U" STRAPS, ELASTIMOLD 164J4–5 OR APPROVED EQUAL
	–	STAINLESS STEEL MOUNTING HARDWARE, AS REQ'D
	–	CABLE TAGS, AS REQ'D
	–	DECALS/NUMBERS, 3" HIGH, REFLECTIVE, AS REQ'D
	1	EQUIPMENT LOCK, TAMPERPROOF

1/U10 UM3–14F: 1–PH JUNCTION BOX – 4 POSITION
SCALE: NTS

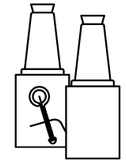

UM6-19

NOTES:
1. PROVIDE #8 COPPER, BARE OR GREEN INSULATED, BONDING JUMPER. CONNECT TO FEED-THROUGH BUSHING WITH THE MANUFACTURERS BONDING PROVISION; AND CONNECT TO GROUND LOOP WITH A WITH A COMPRESSION CONNECTOR.

MATERIAL LIST		
NO.	Qty.	DESCRIPTION
Uhq	1	STAND–OFF INSULATOR FEED THROUGH, 200A, WITH STAINLESS STEEL BRACKET, COOPER LPF215U, OR APPROVED EQUAL
	–	#8 COPPER, BARE OR GREEN INSULATED, WIRE
	–	COMPRESSION CONNECTOR, COPPER, BURNDY YGHC2C4, OR APPROVED EQUAL, AS REQ'D

4/U10 UM6–19: PRIMARY FEED–THRU BUSHING
SCALE: NTS

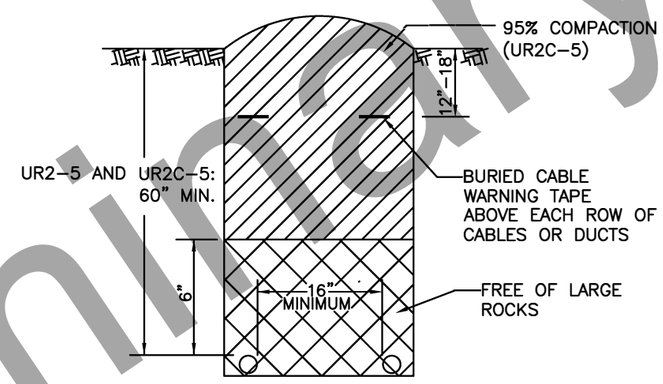

PRIMARY
AND
TELECOMMUNICATION

NOTES:
1. DEPTHS SPECIFIED ARE TO FINISHED GRADE.
2. BACKFILLING IS PART OF ALL TRENCHING UNITS. ALL BACKFILL WITHIN 12" OF CABLE OR CONDUIT SHALL BE FREE OF LARGE ROCKS AND FROZEN MATERIAL WHICH MAY CAUSE DAMAGE TO THE INSTALLED CONDUIT.
UR2C–5: COMPACT BACKFILL IN 6"–8" LIFTS, TO 95% COMPACTION.

LEGEND
- FREE OF LARGE ROCKS
- BACKFILL, COMPACTED AT UR2C–5
- UNDISTURBED EARTH

3/U10 UR2–5/UR2C–5: TRENCH
SCALE: NTS

UM6-10

NOTES:
1. ROUTE MANUFACTURER'S BRAIDED BONDING JUMPER UNDER EQUIPMENT GROUNDING LUG; OR CONNECT TO GROUND LOOP WITH A COMPRESSION CONNECTOR.

MATERIAL LIST		
NO.	Qty.	DESCRIPTION
A	1	INSULATED PROTECTIVE CAP, COOPER LPC215, OR APPROVED EQUAL
	–	COMPRESSION CONNECTOR, COPPER, BURNDY, SIZE AS REQUIRED.

6/U10 UM6–10: INSULATED PRIMARY BUSHING COVER
SCALE: NTS

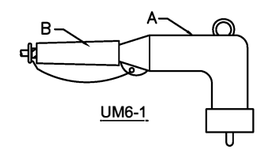

UM6-1

NOTES:
1. INSTALL TERMINATION ON CABLE IN ACCORDANCE WITH MANUFACTURER'S INSTRUCTIONS.
2. INSTALL ONE WRAP OF MASTIC TAPE OVER CABLE JACKET NEAR ITS CUT-BACK EDGE.
3. LAY BACK CONCENTRIC NEUTRALS, OVER MASTIC TAPE, PARALLEL WITH CABLE.
4. INSTALL MASTIC TAPE OVER LAID BACK NEUTRAL AND ABOVE FIRST MASTIC WRAP.
5. INSTALL COLD SHRINK OVER BASE OF ELBOW EXTENDING OVER LAID BACK CONCENTRIC NEUTRALS.
6. USE ONE STRAND OF CONCENTRIC NEUTRAL TO GROUND TERMINATION BODY.
7. TWIST REMAINING NEUTRALS TOGETHER AND CONNECT TO GROUND IN LOOP WITH A COMPRESSION CONNECTOR.
8. PROVIDE SUFFICIENT NEUTRAL TAILS TO ALLOW THE UNENCUMBERED REMOVAL AND INSTALLATION OF THE ELBOW WITH A HOT-STICK.

MATERIAL LIST		
NO.	Qty.	DESCRIPTION
A	1	TERMINATION, ELBOW TYPE, LOADBREAK, 200A, COOPER LE225DD04, OR APPROVED EQUAL
B	1	COLD SHRINK SEAL KIT, 3M 8452, OR APPROVED EQUAL
	–	COMPRESSION CONNECTOR, COPPER, BURNDY YGHC2C2, OR APPROVED EQUAL, AS REQ'D

5/U10 UM6–1: PRIMARY ELBOW TERMINATION
SCALE: NTS

100% NOT FOR CONSTRUCTION

LINE RELOCATION DETAILS

Preliminary Plans

PLANS DEVELOPED BY: EEE, LLC, PO BOX 220471, ANCHORAGE, AK 99522 (907)345-6188
O:\AVEC\Shageluk\eee26-U10-DETAILS Thu, Jul/02/20 01:54am

STATE	PROJECT DESIGNATION	YEAR	SHEET NO.	TOTAL SHEETS
ALASKA	0002163/Z621710000	2020	V1	V9

D-01.02 SHEET 1 of 1

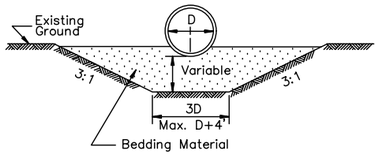

TYPE "A"
FOUNDATION STABILIZATION
To be used in unstable areas as directed by the Engineer.

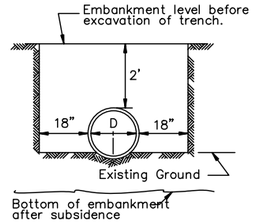

TYPE "B"

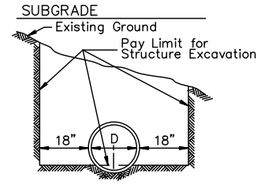

TYPE "C"

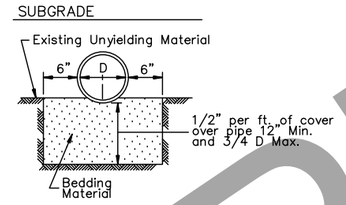

TYPE "D"
ROCK OR UNYIELDING MATERIAL

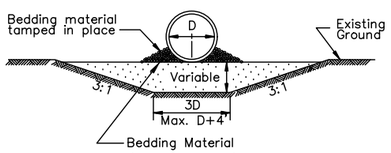

'ALTERNATE'
TYPE "A"
FOUNDATION STABILIZATION
To be used in unstable areas as directed by the Engineer.

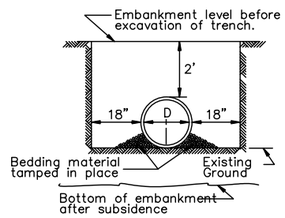

'ALTERNATE'
TYPE "B"

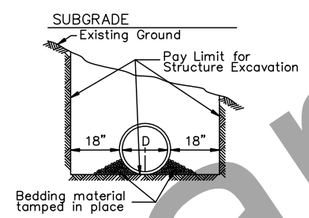

'ALTERNATE'
TYPE "C"

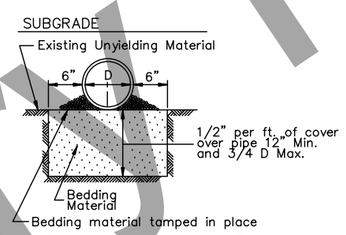

'ALTERNATE' TYPE "D"
ROCK OR UNYIELDING MATERIAL

CULVERT PIPE

GENERAL NOTES:

1. Sidefill shall be placed and compacted with care under haunches of pipe and shall be brought up evenly and simultaneously on both sides of pipe to 1 foot above the top of the full length of the pipe.
2. Alternate installation methods may only be used when specified or approved by the Engineer.

D = Nominal Pipe Diameter

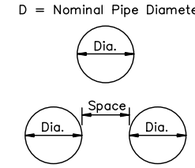

MULTIPLE INSTALLATIONS	
Dia.	Minimum Space Between Pipes
0" - 42"	24"
48" & Over	1/2 Dia. of pipe or 3', whichever is less.

S = Nominal Pipe Arch Span

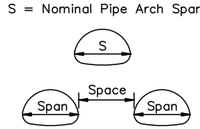

MULTIPLE INSTALLATIONS	
Dia.	Minimum Space Between Pipes
0" - 42"	24"
48" & Over	1/2 Span of pipe arch or 3', whichever is less.

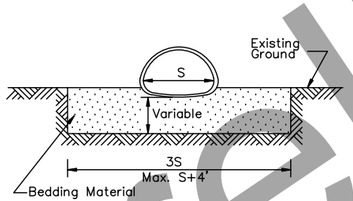

TYPE "A"
FOUNDATION STABILIZATION
To be used in unstable areas as directed by the Engineer.

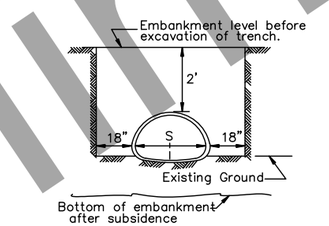

TYPE "B"

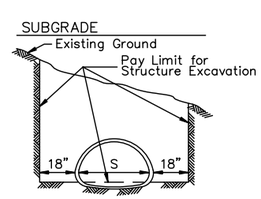

TYPE "C"

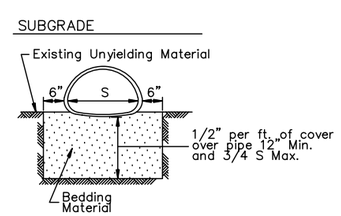

TYPE "D"
ROCK OR UNYIELDING MATERIAL

ARCH

REVISIONS		
Date	Description	By
12/1/87	Delete ref. to Specs.	Gdo
4/1/93	Delete Alt. Arch	Gdo

State of Alaska
Department of Transportation
& Public Facilities

CULVERT PIPE & ARCH
INSTALLATION DETAILS

D-01.02

D-01.02

Preliminary Plans

PLANS DEVELOPED BY: STATE OF ALASKA DEPARTMENT OF TRANSPORTATION & PUBLIC FACILITIES, NORTHERN REGION, 2301 PEGER ROAD, FAIRBANKS, AK 99709 (907)451-2200
C:\Users\cmdemattio\Desktop\62171_ShagelukAptRd\04 PS&E\04 Plans\Review Plan Set\D-01.02-D-01.02 Fri, May/22/20 11:14am

STATE	PROJECT DESIGNATION	YEAR	SHEET NO.	TOTAL SHEETS
ALASKA	0002163 / Z621710000	2020	V2	V9

D-04.21

CORRUGATED CIRCULAR ALUMINUM PIPE

Minimum & Maximum Cover For 2 2/3" x 1/2" Aluminum Pipe

GAGE	0.060"		0.075"		0.105"		0.135"		0.164"	
Dia. (In)	Min. (In)	Max. (Ft)	Min. (In)	Max. (Ft)	Min. (In)	Max. (Ft)	Min. (In)	Max. (Ft)	Min. (In)	Max. (Ft)
12	12	100+	12	100+	12	100+	12	100+	12	100+
15	12	94	12	100+	12	100+	12	100+	12	100+
18	12	75	12	94	12	100+	12	100+	12	100+
21	12	65	12	82	12	100+	12	100+	12	100+
24	12	56	12	71	12	99	12	100+	12	100+
27	12	48	12	63	12	89	12	100+	12	100+
30			12	56	12	79	12	100+	12	100+
36			12	47	12	66	12	85	12	100+
42			12	55	12	56	12	73	12	100+
48			12	47	12	49	12	63	12	78
54					15	43	15	56	15	69
60							15	50	15	62
66							18	44	18	56
72									18	45

Minimum & Maximum Cover For 3" x 1" Aluminum Pipe

GAGE	0.060"		0.075"		0.105"		0.135"		0.164"	
Dia. (In)	Min. (In)	Max. (Ft)	Min. (In)	Max. (Ft)	Min. (In)	Max. (Ft)	Min. (In)	Max. (Ft)	Min. (In)	Max. (Ft)
30	12	52	12	65						
36	12	43	12	54	12	100+	12	100+	12	100+
42	12	36	12	46	12	65	12	100+	12	100+
48	12	32	12	40	12	57	12	73	12	100+
54	15	28	15	35	15	50	12	65	12	100+
60	15	25	15	32	15	45	15	58	15	72
66	18	23	18	28	18	41	18	53	18	65
72	18	21	18	26	18	37	18	48	18	59
78			21	24	21	34	21	44	21	55
84					21	31	21	41	21	57
90					24	29	24	38	21	47
96					24	27	24	36	24	44
102							24	33	24	41
108							24	31	24	39
114									24	37
120									24	35

Minimum & Maximum Cover For 9" x 2 1/2" Aluminum Structural Plate Pipe*

GAGE	0.100"		0.125"		0.150"		0.175"		0.200"		0.225"		0.250"	
Dia. (In)	Min. (In)	Max. (Ft)	Min. (In)	Max. (Ft)	Min. (In)	Max. (Ft)	Min. (In)	Max. (Ft)	Min. (In)	Max. (Ft)	Min. (In)	Max. (Ft)	Min. (In)	Max. (Ft)
60	12	29 31	12	38 45	12	49 60	12	58 70	12	58 81	12	58 92	12	58 100+
66	12	26 28	12	35 41	12	44 54	12	53 64	12	53 74	12	53 84	12	53 94
72	13	24 25	12	32 37	12	41 50	12	48 58	12	48 67	12	48 77	12	48 86
78	14	22 23	12	29 35	12	37 46	12	45 54	12	45 62	12	45 71	12	45 79
84	15	20 22	13	27 32	12	35 42	12	41 50	12	41 58	12	41 66	12	41 73
90	16	19 20	14	25 30	13	32 40	12	39 47	12	39 54	12	39 61	12	39 68
96	17	18 19	15	24 28	14	30 37	13	36 44	12	36 50	12	36 57	12	36 64
102	18	17 18	16	22 26	15	29 35	14	34 41	13	34 47	13	34 54	13	34 60
108	19	16 17	17	21 25	16	27 33	14	32 39	14	32 45	14	32 51	14	32 57
114	20	15 16	18	20 23	16	25 31	15	30 37	15	30 42	15	30 48	15	30 54
120	21	14 15	19	19 22	17	24 30	16	29 35	15	29 40	15	29 46	15	29 51
126	22	13 14	20	18 21	18	23 28	17	27 33	16	27 38	16	27 44	16	27 49
132	23	13 14	21	17 20	19	22 27	18	26 32	17	26 37	17	26 42	17	26 47
138	24	12 13	22	16 19	20	21 26	18	25 30	18	25 35	18	25 40	18	25 44
144	25	12 12	22	16 18	21	20 25	19	24 29	18	24 33	18	24 38	18	24 43
150			23	15 18	21	19 24	20	23 28	19	23 32	19	23 36	19	23 41
156			24	14 17	22	18 23	21	22 27	20	22 31	20	22 35	20	22 39
162					23	18 22	21	21 26	21	21 30	21	21 34	21	21 38
168					24	17 21	22	20 25	21	20 29	21	20 33	21	20 36
174					25	17 20	23	20 24	22	20 28	22	20 31	22	20 35
180							24	19 23	23	19 27	23	19 30	23	19 34

*Longitudinal seams use (5 1/3) 3/4" dia. bolts per foot.

58 — Upper figure for pipe with aluminum bolts.
100+ — Lower figure for pipe with galvanized steel bolts.
(FOR TABLE ABOVE ONLY.)

CORRUGATED ALUMINUM PIPE-ARCH

Minimum & Maximum Cover For 2 2/3" x 1/2" Aluminum Pipe-Arch

Span x Rise (In. x In.)	Corner Radius (In)	Minimum Gage (In)	Min. Cover (In)	Max. Cover (Ft) 2 Tons Corner Bearing Pressure	Max. Cover (Ft) 3 Tons Corner Bearing Pressure ⊘
17 x 13	3	0.060	12	13	20
21 x 15	3	0.060	12	12	19
24 x 18	3	0.060	12	11	16
28 x 20	3	0.075	12	10	16
35 x 24	3	0.075	12	9	14
42 x 29	3 1/2	0.105	12	7	13
49 x 33	4	0.105	15	6	12
57 x 38	5	0.135	15	6	12
64 x 43	6	0.135	18	6	12
71 x 47	7	0.164	18	6	12

Minimum & Maximum Cover For 3" x 1" Aluminum Pipe-Arch

Span x Rise (In. x In.)	Corner Radius (In)	Minimum Gage (In)	Min. Cover (In)	Max. Cover (Ft) 2 Tons Corner Bearing Pressure	Max. Cover (Ft) 3 Tons Corner Bearing Pressure ⊘
40 x 31	5	0.075	30	8	12
46 x 36	6	0.075	24	8	13
53 x 41	7	0.075	24	8	13
60 x 46	8	0.075	24	13	20
66 x 51	9	0.075	18	13	20
73 x 55	12	0.075	18	16	24
81 x 59	14	0.105	18	14	22
87 x 63	14	0.105	18	13	20
95 x 67	16	0.105	18	12	18
103 x 71	16	0.135	24	11	17
112 x 75	18	0.164	24	10	16
117 x 79	18	0.164	24	10	15

Minimum & Maximum Cover For 9" x 2Ð " Aluminum Structural Plate Pipe-Arch*

Span x Rise (Ft-In x Ft-In)	Corner Radius (In)	Minimum Gage (In)	Min. Cover (ft)	Max. Cover in Feet For Soil Bearing Capacity of: 2 Tons/ft²	3 Tons/ft²
5 – 11 x 5 – 5	31.8	0.100	2	24**	24**
6 – 11 x 5 – 9	31.8	0.100	2	22**	22**
7 – 3 x 5 – 11	31.8	0.100	2	20**	20**
7 – 9 x 6 – 0	31.8	0.100	2	28**	18**
8 – 5 x 6 – 3	31.8	0.100	2	17**	17**
9 – 3 x 6 – 5	31.8	0.100	2	15**	15**
10 – 3 x 6 – 9	31.8	0.100	2	14**	14**
10 – 9 x 6 – 10	31.8	0.100	2	13**	13**
11 – 5 x 7 – 1	31.8	0.100	2	12**	12**
12 – 7 x 7 – 5	31.8	0.125	2	14	16**
12 – 11 x 7 – 6	31.8	0.150	2	13	14**
13 – 1 x 8 – 2	31.8	0.150	2	13	18**
13 – 11 x 8 – 5	31.8	0.150	2	12	17**
14 – 8 x 9 – 8	31.8	0.175	2	12	18
15 – 4 x 10 – 0	31.8	0.175	2	11	17
16 – 1 x 10 – 4	31.8	0.200	2	10	16
16 – 9 x 10 – 8	31.8	0.200	2.17	10	15
17 – 3 x 11 – 0	31.8	0.225	2.25	10	15
18 – 0 x 11 – 4	31.8	0.255	2.25	9	14
18 – 8 x 11 – 8	31.8	0.250	2.33	9	14

*Longitudinal seams use (5 1/3) 3/4" dia. bolts per foot.

**Fill limited by the seam strength of the bolts. 3/4" dia. bolts per foot.

GENERAL NOTES:

1. All material and workmanship shall be in accordance with the State of Alaska, Standard Specifications for Highway Construction.
2. The contractor shall select only pipes that meet specific height of cover criteria shown on the plans or in the special provisions.
3. No more than one type of pipe may be used on any single installation or installation grouping.
4. All structural plate pipes shall be placed on a pre-shaped foundation conforming to the depth of the bottom plates with clearance for assembling to the adjacent plates allowed.
5. See Standard Drawing "Culvert Pipe & Arch Installation Details" for foundation and structural backfill details.
6. Minimum cover shall be measured from the top of pipe to the top of rigid pavement or to the top of flexible pavement subgrade. In all cases, the minimum cover shall not be less than 12". Minimum cover during construction shall be that required to protect the pipe from damage or deflecton.
7. These tables have been developed for an H-20 live load and for compacted soil weighing 120 lbs. per cubic foot or less. If compacted soil cover exceeds 120 lbs. per cubic foot, the contractor shall use the depth of cover shown in the plans for the specific pipe. Where compacted soil cover exceeds 120 lbs. per cubic foot and no specific cover requirements are provided in the plans, the contractor shall determine the required minimum pipe cover in accordance with Section 12 of the 2000 AASHTO "LRFD Bridge Design Specifications".

METAL THICKNESSES & GAGES

ALUMINUM	GAGE NO. (For Info Only)
0.060	16
0.075	14
0.105	12
0.135	10
0.164	8

⊘ This column shall not be used unless specified on the plans or approved by the Regional Geotechnical Engineer.

REVISIONS		
Date	Description	By
8/10/00	Pipe Tables & G. Notes.	DFD
10/31/03	Pipe Table Updates & New Sheet 4	LRG

Sheet 1 of 4

State of Alaska
Department of Transportation
& Public Facilities

PIPE AND ARCH TABLES

D-04.21

D-04.21A

Preliminary Plans

PLANS DEVELOPED BY: STATE OF ALASKA DEPARTMENT OF TRANSPORTATION & PUBLIC FACILITIES, NORTHERN REGION, 2301 PEGER ROAD, FAIRBANKS, AK 99709 (907)451-2200
C:\Users\cmdemattio\Desktop\62171_ShagaluAptRd\04 PS&E\04 Plans\Review Plan Set\D-04.21D-D-04.21A Fri, May/22/20 11:14am

STATE	PROJECT DESIGNATION	YEAR	SHEET NO.	TOTAL SHEETS
ALASKA	0002163 / Z621710000	2020	V3	V9

D-04.21

Minimum & Maximum Cover For 2 2/3" x 1/2" Steel Pipe

GAGE	0.064"		0.079"		0.109"		0.138"		0.168"	
Dia. (In)	Min. (In)	Max. (Ft)	Min. (In)	Max. (Ft)	Min. (In)	Max. (Ft)	Min. (In)	Max. (Ft)	Min. (In)	Max. (Ft)
12	12	100+	12	100+	12	100+	12	100+	12	100+
15	12	100+	12	100+	12	100+	12	100+	12	100+
18	12	100+	12	100+	12	100+	12	100+	12	100+
21	12	100+	12	100+	12	100+	12	100+	12	100+
24	12	100+	12	100+	12	100+	12	100+	12	100+
27	12	100+	12	100+	12	100+	12	100+	12	100+
30	12	99	12	100+	12	100+	12	100+	12	100+
36	12	83	12	100+	12	100+	12	100+	12	100+
42	12	71	12	88	12	100+	12	100+	12	100+
48	12	62	12	77	12	100+	12	100+	12	100+
54			12	66	12	93	12	100+	12	100+
60					12	79	12	100+	12	100+
66					12	68	12	88	12	100+
72							12	75	12	93
78									12	79
84									12	66

Minimum & Maximum Cover For 3" x 1" Steel Pipe

GAGE	0.064"		0.079"		0.109"		0.138"		0.168"	
Dia. (In)	Min. (In)	Max. (Ft)	Min. (In)	Max. (Ft)	Min. (In)	Max. (Ft)	Min. (In)	Max. (Ft)	Min. (In)	Max. (Ft)
36	12		12		12	100+	12	100+	12	100+
42	12		12		12	100+	12	100+	12	100+
48	12		12	76	12	100+	12	100+	12	100+
54	12	63	12	79	12	100+	12	100+	12	100+
60	12	56	12	71	12	99	12	100+	12	100+
66	12	52	12	64	12	90	12	100+	12	100+
72	12	47	12	59	12	82	12	100+	12	100+
78	12	44	12	54	12	77	12	98	12	100+
84	12	41	12	51	12	71	12	92	12	100+
90	12	37	12	47	12	67	12	86	12	100+
96	12	35	12	44	12	62	12	80	12	98
102	18	33	18	42	18	59	18	76	18	93
108			18	40	18	55	18	71	18	87
114			18	36	18	51	18	66	18	80
120			18	34	18	46	18	61	18	75
126					18	44	18	56	18	70
132					18	41	18	53	18	64
138					18	37	18	49	18	60
144							18	44	18	55
150									18	52

Minimum & Maximum Cover For 5" x 1" Steel Pipe*

GAGE	0.064"		0.079"		0.109"		0.138"		0.168"	
Dia. (In)	Min. (In)	Max. (Ft)	Min. (In)	Max. (Ft)	Min. (In)	Max. (Ft)	Min. (In)	Max. (Ft)	Min. (In)	Max. (Ft)
36	12	81	12	90	12	100+	12	100+	12	100+
42	12	71	12	77	12	100+	12	100+	12	100+
48	12	62	12	68	12	100+	12	100+	12	100+
54	12	56	12	70	12	98	12	100+	12	100+
60	12	50	12	63	12	88	12	100+	12	100+
66	12	46	12	57	12	80	12	100+	12	100+
72	12	42	12	52	12	73	12	95	12	100+
78	12	39	12	48	12	68	12	87	12	100+
84	12	36	12	45	12	63	12	81	12	99
90	12	33	12	42	12	59	12	76	12	93
96	12	31	12	39	12	55	12	71	12	87
102	18	29	18	37	18	52	18	67	18	82
108			18	35	18	49	18	63	18	77
114			18	32	18	45	18	58	18	71
120			18	30	18	41	18	54	18	66
126					18	39	18	50	18	62
132					18	36	18	47	18	57
138					18	33	18	43	18	53
144							18	39	18	49
150									19	47

*Table for pipe with helical lockseams or helical welded seams ONLY.

Minimum & Maximum Cover For 6" x 2" Steel Structural Plate Pipe**

GAGE	ALL	0.111"	0.140"	0.170"	0.188"	0.218"	0.249"	0.280"
Dia. (In)	Min. (In)	Max. (Ft)	Max. (Ft)	Max. (Ft)	Max. (Ft)	Max. (Ft)	Max. (Ft)	Max. (Ft)
60	12	46	68	90	100+	100+	100+	100+
66	12	42	62	81	93	100+	100+	100+
72	12	38	57	75	86	100+	100+	100+
78	12	35	52	69	79	95	100+	100+
84	12	33	49	64	73	88	100+	100+
90	12	31	45	60	68	82	97	100+
96	12	29	43	56	64	77	91	100+
102	18	27	40	52	60	73	86	94
108	18	25	38	50	57	69	81	88
114	18	24	36	47	54	65	77	84
120	18	23	34	45	51	62	73	80
126	18	22	32	42	49	59	69	76
132	18	21	31	40	46	56	66	72
138	18	20	29	39	44	54	63	69
144	18	19	28	37	43	51	61	66
150	24	18	27	36	41	49	58	64
156	24	17	26	34	39	47	56	61
162	24	17	25	33	38	46	54	59
168	24	16	24	32	36	44	52	57
174	24	16	23	31	35	42	50	55
180	24	15	22	30	34	41	48	53
186	24	15	22	29	33	40	47	51
192	24		21	28	32	38	45	50
198	30		20	27	31	37	44	48
204	30		20	26	30	36	43	47
210	30		19	25	29	35	41	45
216	30			25	28	34	40	44
222	30			24	27	33	39	43
228	30			23	27	32	38	42
234	30			23	26	31	37	41
240	30				25	31	36	40
246	36				25	30	35	39
252	36					29	34	38
258	36					28	34	37
264	36					28	33	36
270	36					27	32	35
276	36						31	34
282	36						31	34
288	42						30	33
294	42							32
300	42							32
306	42							31
312	42							30

**Longitudinal seams use (4) 3/4" dia. bolts per foot.

CORRUGATED CIRCULAR STEEL PIPE

CORRUGATED STEEL PIPE-ARCH

GENERAL NOTES

1. All material and workmanship shall be in accordance with the State of Alaska, Standard Specifications for Highway Construction.
2. The contractor shall select only pipes that meet specific height of cover criteria shown on the plans or in the special provisions.
3. No more than one type of pipe may be used on any single installation or installation grouping.
4. All structural plate pipes shall be placed on a pre-shaped foundation conforming to the depth of the bottom plates with clearance for assembling to the adjacent plates allowed.
5. See Standard Drawing "Culvert Pipe & Arch Installation Details" for foundation and structural backfill details.
6. Minimum cover shall be measured from the top of pipe to the top of rigid pavement or to the top of flexible pavement subgrade. In all cases, the minimum cover shall not be less than 12". Minimum cover during construction shall be that required to protect the pipe from damage or deflecton.
7. These tables have been developed for an H-20 live load and for compacted soil weighing 120 lbs. per cubic foot or less. If compacted soil cover exceeds 120 lbs. per cubic foot, the contractor shall use the depth of cover shown in the plans for the specific pipe. Where compacted soil cover exceeds 120 lbs. per cubic foot and no specific cover requirements are provided in the plans, the contractor shall determine the required minimum pipe cover in accordance with Section 12 of the 2000 AASHTO "LRFD Bridge Design Specifications".

Minimum & Maximum Cover For 2 2/3" x 1/2" Steel Pipe-Arch

Span x Rise (In. x In.)	Corner Radius (In)	Minimum Gage (In)	Min. Cover (In)	Max. Cover (Ft) 2 Tons Corner Bearing Pressure	Max. Cover (Ft) 3 Tons Corner Bearing Pressure ⊘
17 x 13	3	0.064	12	16	18
21 x 15	3	0.064	12	15	14
24 x 18	3	0.064	12	15	13
28 x 20	3	0.064	12	15	11
35 x 24	3	0.064	12	15	7
42 x 29	3 1/2	0.064	12	15	7
49 x 33	4	0.079	12	15	6
57 x 38	5	0.109	12	15	8
64 x 43	6	0.109	12	15	9
71 x 47	7	0.138	12	15	10
77 x 52	8	0.168	12	15	10
83 x 57	9	0.168	12	15	10

Minimum & Maximum Cover For 3" x 1" Steel Pipe-Arch

Span x Rise (In. x In.)	Corner Radius (In)	Minimum Gage (In)	Min. Cover (In)	Max. Cover (Ft) 2 Tons Corner Bearing Pressure	Max. Cover (Ft) 3 Tons Corner Bearing Pressure ⊘
40 x 31	5	0.079	12	25	12
46 x 36	6	0.079	12	25	13
53 x 41	7	0.079	12	25	13
60 x 46	8	0.079	15	25	13
66 x 51	9	0.079	15	25	13
73 x 55	12	0.079	18	24	16
81 x 59	14	0.079	18	21	17
87 x 63	14	0.079	18	20	16
95 x 67	16	0.079	18	20	17
103 x 71	16	0.079	18	20	15
112 x 75	18	0.079	21	20	16
117 x 79	18	0.109	21	19	15
128 x 83	18	0.138	24	19	14
137 x 87	18	0.138	24	19	13
142 x 91	18	0.138	24	19	12
150 x 96	18	0.138	30	19	
157 x 96	18	0.138	30	19	
164 x 105	18	0.138	30	19	
171 x 110	18	0.138	30	19	

Minimum & Maximum Cover For 5" x 1" Steel Pipe-Arch

Span x Rise (In. x In.)	Corner Radius (In)	Minimum Gage (In)	Min. Cover (In)	Max. Cover (Ft) 2 Tons Corner Bearing Pressure	Max. Cover (Ft) 3 Tons Corner Bearing Pressure ⊘
40 x 31	5	0.109	12	25	12
46 x 36	6	0.109	15	25	13
53 x 41	7	0.109	15	25	13
60 x 46	8	0.109	18	25	13
66 x 51	9	0.109	18	25	13
73 x 55	12	0.109	18	24	16
81 x 59	14	0.109	18	21	17
87 x 63	14	0.109	18	20	16
95 x 67	16	0.109	18	20	17
103 x 71	16	0.109	18	20	15
112 x 75	18	0.109	21	20	16
117 x 79	18	0.109	21	19	15
128 x 83	18	0.109	24	19	14
137 x 87	18	0.109	24	19	13
142 x 91	18	0.109	24	19	12
150 x 96	18	0.138	30	19	
157 x 96	18	0.138	30	19	
164 x 105	18	0.138	30	19	
171 x 110	18	0.138	30	19	

Minimum & Maximum Cover For 6" x 2" Steel Structural Plate Pipe-Arch**

Span x Rise (Ft-In x Ft-In)	Corner Radius (In)	Minimum Gage (In)	2 Tons Corner Bearing Pressure Min. Cover (In)	2 Tons Corner Bearing Pressure Max. Cover (Ft)	3 Tons Corner Bearing Pressure ⊘ Min. Cover (In)	3 Tons Corner Bearing Pressure ⊘ Max. Cover (Ft)
6-1 x 4-7	18	0.111	18	16	12	24
7-0 x 5-1	18	0.111	18	14	12	21
7-11 x 5-7	18	0.111	18	13	12	19
8-10 x 6-1	18	0.111	24	11	18	17
9-9 x 6-7	18	0.111	24	10	18	15
10-11 x 7-1	18	0.111	24	9	18	14
11-10 x 7-7	18	0.111	24	7	18	13
12-10 x 8-4	18	0.111	30	6	24	12
14-1 x 8-9	18	0.111	30	5	24	11
15-4 x 9-3	18	0.111	NS	NS	24	10
15-10 x 9-10	18	0.111	NS	NS	24	9
16-7 x 10-1	18	0.111	NS	NS	24	9
13-3 x 9-4	31	0.111	24	13	24	17
14-2 x 9-10	31	0.111	24	12	24	16
15-4 x 10-4	31	0.111	24	11	24	15
16-3 x 10-10	31	0.111	24	11	24	14
17-2 x 11-4	31	0.111	30	10	30	13
18-1 x 11-10	31	0.111	30	10	30	12
19-3 x 12-4	31	0.111	30	9	30	13
19-11 x 12-10	31	0.140	30	9	30	13
20-7 x 13-2	31	0.140	36	7	36	13

NS = Not Suitable

**Longitudinal seams use (4) 3/4" dia. bolts per foot.

⊘ This column shall not be used unless specified on the plans or approved by the Region Geotechnical Engineer.

METAL THICKNESSES & GAGES

STEEL ZINC COATED	STEEL UNCOATED	GAGE NO. (For Info Only)
0.064	0.0598	16
0.079	0.0747	14
0.109	0.1047	12
0.138	0.1345	10
0.168	0.1644	8
0.188	0.1838	7
0.218	0.2145	5
0.249	0.2451	3
0.280	0.2758	1

REVISIONS

Date	Description	By
8/10/00	Pipe Tables & G. Notes.	DFD
10/31/03	Pipe Table Updates & New Sheet 4.	LRG

Sheet 2 of 4

State of Alaska
Department of Transportation & Public Facilities

PIPE AND ARCH TABLES

D-04.21

D-04.21B

Preliminary Plans

PLANS DEVELOPED BY: STATE OF ALASKA DEPARTMENT OF TRANSPORTATION & PUBLIC FACILITIES, NORTHERN REGION, 2301 PEGER ROAD, FAIRBANKS, AK 99709 (907)451-2200
C:\Users\cmdemattio\Desktop\62171_ShagelukAptRd\04 PS&E\04 Plans\Review Plan Set\D-04.21D-D-04.21B Fri, May/22/20 11:14am

D-04.21

Maximum Cover for Type S Corrugated Polyethelene Pipe	
Size (in.)	Max. Cover (ft.)
12	30.0
15	30.0
18	30.0
24	30.0
30	30.0
36	30.0
40	20.0
48	20.0

GENERAL NOTES

1. All materials and workmanship shall be in accordance with the State of Alaska Standard Specifications for Highway Construction.
2. For foundation and structural backfill details see Standard Drawing "Culvert Pipe & Arch Installation Details".
3. Pipe cover height is measured from top of the pipe to top of rigid pavement, or to the top of subgrade for flexible pavement. In all cases the minimum cover shall be no less than 2 ft. Where loads traverse the culvert during construction minimum cover shall be no less than 4 ft.

REVISIONS

Date	Description	By
10/31/03	New Sheet 4.	LRG

Sheet 3 of 4

State of Alaska
Department of Transportation
& Public Facilities

PIPE AND ARCH TABLES

D-04.20

D-04.21C

Preliminary Plans

PLANS DEVELOPED BY: STATE OF ALASKA DEPARTMENT OF TRANSPORTATION & PUBLIC FACILITIES, NORTHERN REGION, 2301 PEGER ROAD, FAIRBANKS, AK 99709 (907)451-2200
C:\Users\cmdematto\Desktop\62171_ShagelukAptRd\04 PS&E\04 Plans\Review Plan Set\D-04.21D-D-04.21C Fri, May/22/20 11:14am

STATE	PROJECT DESIGNATION	YEAR	SHEET NO.	TOTAL SHEETS
ALASKA	0002163 / Z621710000	2020	V5	V9

D-04.21

GENERAL NOTES

1. All material and workmanship shall be in accordance with the State of Alaska, Standard Specifications for Highway Construction.
2. The contractor shall select only pipes that meet specific height of cover criteria shown on the plans or in the special provisions.
3. No more than one type of pipe may be used on any single installation or installation grouping.
4. All structural plate pipes shall be placed on a pre-shaped foundation conforming to the depth of the bottom plates with clearance for assembling to the adjacent plates allowed.
5. See Standard Drawing "Culvert Pipe & Arch Installation Details" for foundation and structural backfill details.
6. Minimum cover shall be measured from the top of pipe to the top of rigid pavement or to the top of flexible pavement subgrade. In all cases, the minimum cover shall not be less than 12". Minimum cover during construction shall be that required to protect the pipe from damage or deflecton.
7. These tables have been developed for an H-20 live load and for compacted soil weighing 120 lbs. per cubic foot or less. If compacted soil cover exceeds 120 lbs. per cubic foot, the contractor shall use the depth of cover shown in the plans for the specific pipe. Where compacted soil cover exceeds 120 lbs. per cubic foot and no specific cover requirements are provided in the plans, the contractor shall determine the required minimum pipe cover in accordance with Section 12 of the 2000 AASHTO "LRFD Bridge Design Specifications".

Minimum & Maximum Cover For Aluminum Spiral Rib Circular Pipe*

GAGE	0.060"		0.075"		0.105"		0.135"	
Dia. (in)	Min. (in)	Max. (Ft)	Min. (in)	Max. (Ft)	Min. (in)	Max. (Ft)	Min. (in)	Max. (Ft)
12	24	35	24	50				
18	24	34	24	49				
24	24	25	24	36	24	63	24	82
30	24	19	24	28	24	50	24	65
36	24	15	24	24	24	41	24	54
42			24	19	24	35	24	46
48			24	17	24	30	24	40
54			24	14	24	27	24	35
60			24	12	24	24	24	30

*¾ x ¾ x 7½ in. or ¾ x 1 x 11½ in. Corrugations

Minimum & Maximum Cover For Aluminum Spiral Rib Pipe-Arch*

		Soil Corner Bearing Capacity of 2 Tons/ s.f.		
		0.060"	0.075"	0.105"
Span x Rise (In. x In.)	Min. Cover (In.)	Max. Cover (ft.)	Max. Cover (ft.)	Max. Cover (ft.)
20 x 16	12	13		
23 x 19	12	14		
27 x 21	12	13		
33 x 26	12	13		
40 x 31	12	13		
46 x 36	12	14		
53 x 41	18		13	
60 x 46	18		20	
66 x 51	18		21	
73 x 55	18			21
81 x 59	18			17
87 x 63	18			17
95 x 67	18			17

*¾ x ¾ x 7½ in. or ¾ x 1 x 11½ in. Corrugations

ALUMINUM SPIRAL RIB PIPE

STEEL SPIRAL RIB PIPE

Minimum & Maximum Cover For Steel and Aluminized Steel Spiral Rib Circular Pipe*

GAGE	0.064"		0.079"		0.109"		0.138"**	
Dia. (in)	Min. (in)	Max. (Ft)	Min. (in)	Max. (Ft)	Min. (in)	Max. (Ft)	Min. (in)	Max. (Ft)
18	12							
24	12	51	12	72	12	121		
30	12	41	12	58	12	97		
36	12	34	12	48	12	81		
42	12	29	12	41	12	69		
48	12	26	12	36	12	61		
54	18	23	18	32	18	54		
60	18	21	18	29	18	49	18	73
66	18	19	18	26	18	44	18	65
72			18	24	18	40	18	59
78			24	22	24	37	24	55
84			24	21	24	35	24	52
90					24	32	24	47
96					24	30	24	44
102					30	29	30	43
108					30	27	30	41

*¾ x ¾ x 7½ in. or ¾ x 1 x 11½ in. Corrugations
**¾ x ¾ x 7½ in. Corrugations Only.

Minimum & Maximum Cover For Steel Spiral Rib Arch-Pipe*

		Soil Corner Bearing Capacity of 2 Tons/ s.f.		
		0.064"	0.079"	0.109"
Span x Rise (In. x In.)	Min. Cover (In.)	Max. Cover (ft.)	Max. Cover (ft.)	Max. Cover (ft.)
20 x 16	12	13		
23 x 19	12	14		
27 x 21	12	13		
33 x 26	12	13		
40 x 31	12	13		
46 x 36	12	14		
53 x 41	18		13	
60 x 46	18		20	
66 x 51	18		21	
73 x 55	18			21
81 x 59	18			17
87 x 63	18			17
95 x 67	18			17

*¾ x ¾ x 7½ in. or ¾ x 1 x 11½ in. Corrugations

REVISIONS

Date	Description	By
8/10/00	Pipe Tables & G. Notes.	DFD
10/31/03	New Sheet 4.	LRG

Sheet 4 of 4

State of Alaska
Department of Transportation
& Public Facilities

PIPE AND ARCH TABLES

D-04.21

D-04.21D

Preliminary Plans

PLANS DEVELOPED BY: STATE OF ALASKA DEPARTMENT OF TRANSPORTATION & PUBLIC FACILITIES, NORTHERN REGION, 2301 PEGER ROAD, FAIRBANKS, AK 99709 (907)451-2200
C:\Users\cmdematto\Desktop\62171_ShagelukAptRd\04 PS&E\04 Plans\Review Plan Set\D-04.21D-D-04.21D Fri, May/22/20 11:14am

STATE	PROJECT DESIGNATION	YEAR	SHEET NO.	TOTAL SHEETS
ALASKA	0002163 / Z621710000	2020	V6	V9

S-00.11

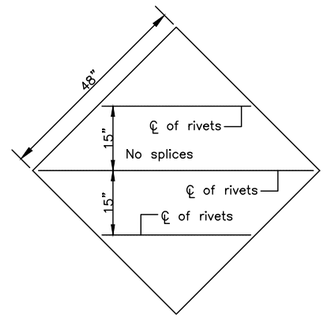

TUBE SIGN POST SPACING								
Sign Width (feet)	No. of Posts	Distance Between Posts	Sign Overhang	Post Type				Notes
				P.S.T.	Wood	Steel Tube	W-Shape	
0.5 to 4.0	1	–	0.5W	X	X	X		See Note 2.
4.5 to 10.0	2	0.6W	0.2W	X	X	X		See Note 3.
10.5 to 11.0	2	6	Varies	X	X	X		See Note 3.
11.5 to 13.0	2	8	Varies				X	
13.5 to 20.0	2	0.6W	0.2W				X	
20.5 to 22.5	3	8	Varies				X	
23.0 to 29.5	3	0.35W	0.15W				X	
30.0 to 31.5	4	8	Varies				X	
32.0 to 40.0	4	0.25W	0.125W				X	

SIGN POST SPACING NOTES:

1. Install sign support in accordance with the table above, unless otherwise required by plans or specifications.
2. Exceptions:
   a. Use one post for all E5-1 gore signs, regardless of width.
   b. Use one 2.5" P.S.T. for all STOP signs, with or without street name signs.
3. Supports placed within 7' of each other must be acceptable for that use. See Standard Drawing S-30 for the sizes of wood posts and P.S.T.s that may be used within 7'. See Manufacturer's documentation for breakaway couplings and tubes that may be used within 7'.
4. See Standard Drawing S-31 for frangible couplings, hinges, and foundations for tube and W-shape sign supports.

GENERAL NOTES

1. See the standard specifications for the aluminum alloys that you may use for sign sheeting and wind framing members.
2. Fabricate all signs from 0.125" thick aluminum sheeting.
3. Sign fabricators may use alternates to the zee shaped framing member with approval of the engineer, if the frame manufacturer certifies their design equals or exceeds the strength of the zee shaped design.
4. Install one piece wind framing members on all signs up to 23.5' wide. Use one splice in each wind frame on all signs wider than 23.5'. Locate splices at least 18" from all posts and panel edges. Stagger splices in adjacent framing members at least 8.0' apart.
5. Attach wind framing members with rivets or with an engineer approved, double sided, high strength, adhesive tape. Clean and handle sheeting and framing members and apply tape in accordance with the tape manufacturer's written instructions. Install two rivets in both ends of each framing member.
6. Use 3/16" diameter rivets conforming to aluminum alloy 6061-T6 for cold driven rivets, or aluminum alloy 6061-T43 for hot driven rivets.
7. Sign fabricators may use sign panels extruded with integral framing with approval of the engineer, if the manufacturer certifies their design equals or exceeds the strength of the 0.125" thick panel with framing attached to it.
8. Frame all signs taller than 8.0' with five wind framing members located (H-0.15)/4 spaces. If needed, make a horizontal splice at the middle wind frame.
9. Do not use round pipes for sign supports.

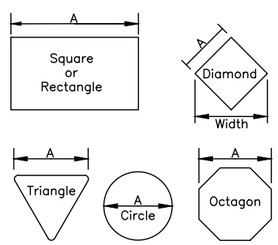

Maximum size unframed signs using 0.125" thick aluminum sheeting.	
Sign Shape	A
Squares, Shields, and Route Markers	48"
Rectangles	48"
Diamonds	48"
Triangles	48"
Rounds and Octagons	48"

Install wind framing on all signs that exceed the dimensions listed.

LIGHT SIGNS

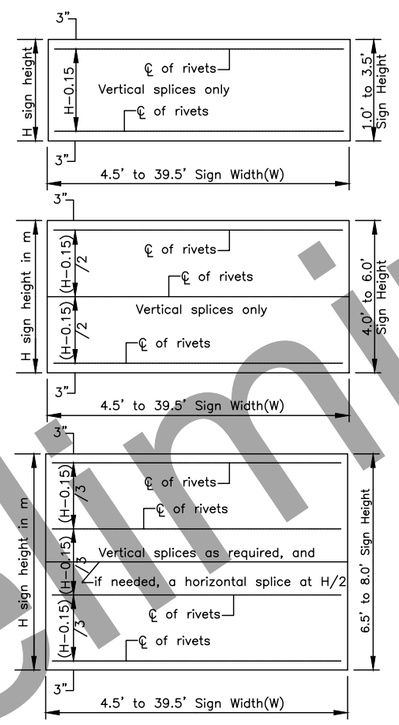

WIND FRAMING LOCATIONS

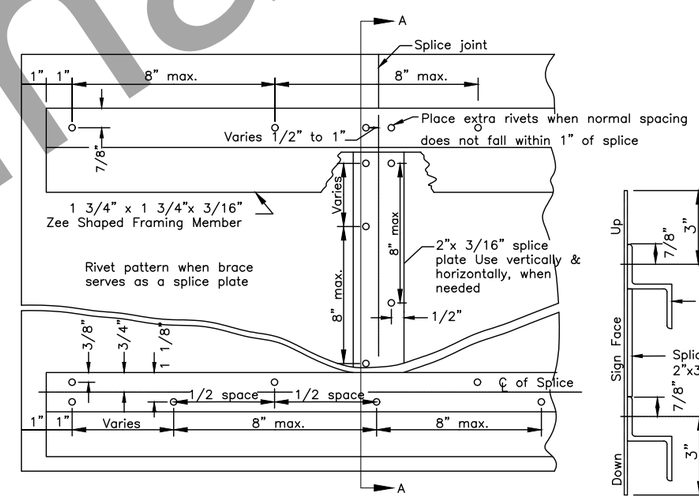

RIVET DETAIL FOR ZEE SHAPED WIND FRAMING & SPLICE PLATE

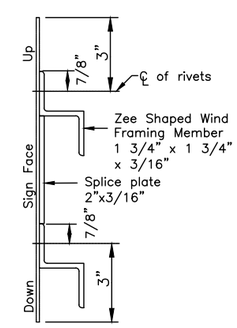

SECTION A-A

REVISIONS		
Date	Description	By
4/28/10	Delete pipe, rev notes	KJS

Sheet 1 of 1

State of Alaska
Department of Transportation
& Public Facilities

SIGN FRAMING AND POST SPACING

S-00.11

S-00.11

Preliminary Plans

PLANS DEVELOPED BY: STATE OF ALASKA DEPARTMENT OF TRANSPORTATION & PUBLIC FACILITIES, NORTHERN REGION, 2301 PEGER ROAD, FAIRBANKS, AK 99709 (907)451-2200
C:\Users\cmdamattio\Desktop\62171_ShagelukAptRd\04 PS&E\04 Plans\Review Plan Set\S-00.11-S-00.11 Fri, May/22/20 11:14am 1:14am

STATE	PROJECT DESIGNATION	YEAR	SHEET NO.	TOTAL SHEETS
ALASKA	0002163 / Z621710000	2020	V7	V9

S-01.01

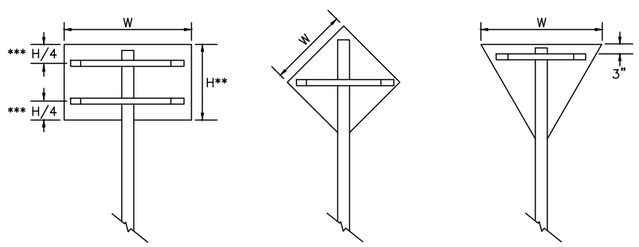

*** Use one brace when H ≤ 18"
Use two braces when 18"< H < 48"
Use three braces when H ≥ 48"

** Position of brace may be varied to match Predrilled mounting holes in panel

SIGN BRACING PLACEMENT

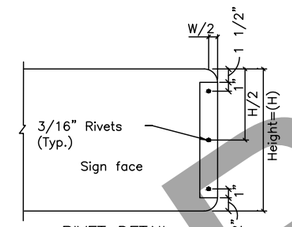

RIVET DETAIL ELEVATION VIEW

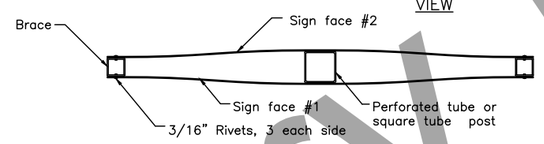

PLAN VIEW

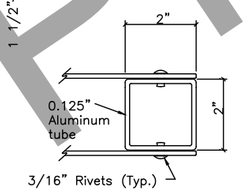

END BRACE DETAIL

SMALL STREET NAME SIGN (D3-1, D3-1A, D3-1D) BRACING DETAILS

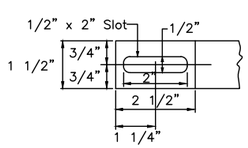

DETAIL OF BRACE SLOT
Elevation view

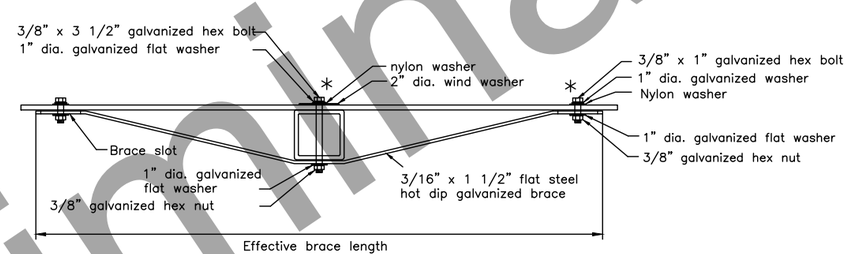

TUBE POST SIGN BRACING
Plan view

* Adjust location of bracing so that bolts and washers will miss the sign legend

Sign Width(W)	Effective Brace Length		
	Warning	Yield	Other
30"	36"	24"	24"
36"	42"	30"	30"
42"	48"	–	36"
48"	Two posts	36"	42"

< 30" No bracing required and use square tube

DRAWING NOT TO SCALE

REVISIONS		
Date	Description	By
1/16/17	Bolt size & type	LRG

State of Alaska DOT&PF

BRACING FOR SIGNS MOUNTED ON SINGLE POST

S-01.01

Preliminary Plans

PLANS DEVELOPED BY: STATE OF ALASKA DEPARTMENT OF TRANSPORTATION & PUBLIC FACILITIES, NORTHERN REGION, 2301 PEGER ROAD, FAIRBANKS, AK 99709 (907)451-2200
C:\Users\cmdematto\Desktop\62171_ShagelukAptRd\04 PS&E\04 Plans\Review Plan Set\S-01.01-S-01.01 Fri, May/22/20 11:14am

S-01.01

STATE	PROJECT DESIGNATION	YEAR	SHEET NO.	TOTAL SHEETS
ALASKA	0002163 / Z621710000	2020	V8	V9

S-05.01

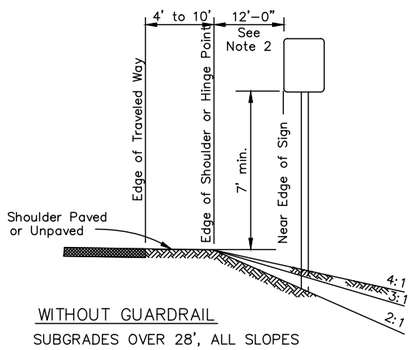

WITHOUT GUARDRAIL
SUBGRADES OVER 28', ALL SLOPES

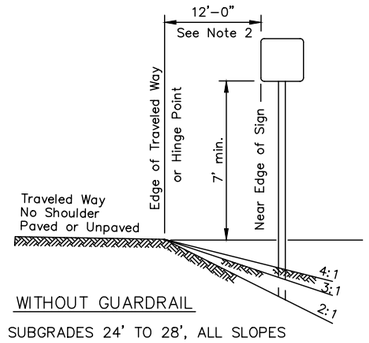

WITHOUT GUARDRAIL
SUBGRADES 24' TO 28', ALL SLOPES

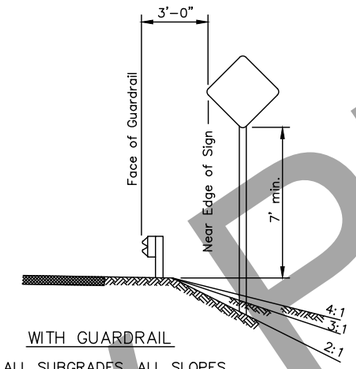

WITH GUARDRAIL
ALL SUBGRADES, ALL SLOPES

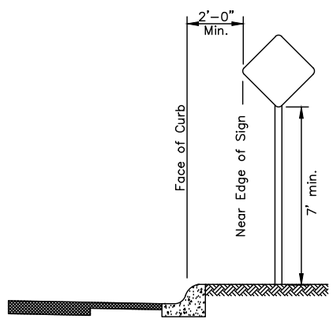

CURB WITHOUT SIDEWALK

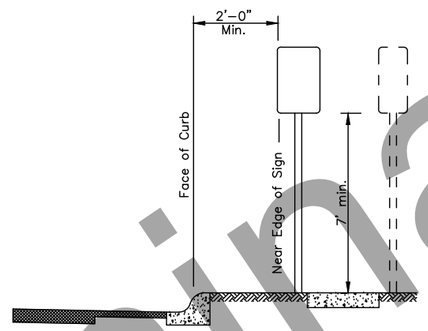

CURB WITH PARKWAY AND SIDEWALK
(If R/W width permits, signs should be placed behind sidewalk.)

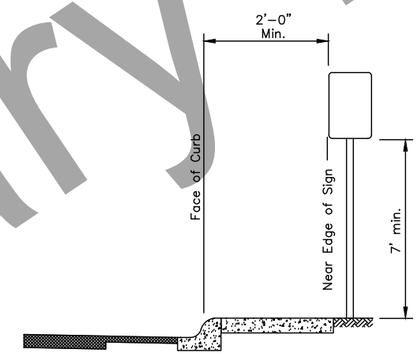

CURB WITH SIDEWALK WITHOUT PARKWAY

GENERAL NOTES

1. Unless shown otherwise on the plans, the standard sign offset is 12'. The minimum is 6'.
2. If signs extend over sidewalks, the minimum vertical clearance is 7'-0".
3. Add 6" to mounting height on unpaved roads.
4. If signs extend over bike paths, the minimum vertical clearance is 8' 0".
5. When signs are placed 30' or more from the edge of traveled way, mount them with the bottom of the sign at least 5' above the road surface at the near edge of the road.
6. When multiple hinged sign supports are used, mount hinges at least 7' above the ground.

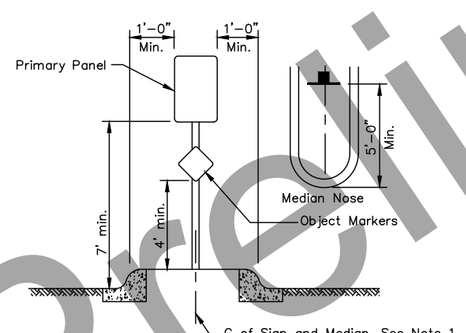

RAISED MEDIANS
Minimum 4' Width for Signing

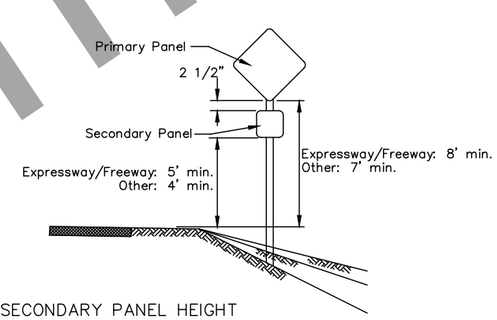

SECONDARY PANEL HEIGHT
ALL TWO PANEL MOUNTING

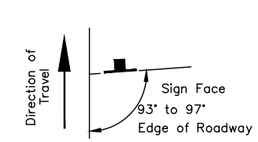

SIGN POSITIONING

REVISIONS		
Date	Description	By
4/3/01	Revised Sign Heights	KJS

Sheet 1 of 1

State of Alaska
Department of Transportation
& Public Facilities

POST MOUNTED SIGN
OFFSET AND HEIGHT

S-05.01

S-05.01

Preliminary Plans

PLANS DEVELOPED BY: STATE OF ALASKA DEPARTMENT OF TRANSPORTATION & PUBLIC FACILITIES, NORTHERN REGION, 2301 PEGER ROAD, FAIRBANKS, AK 99709 (907)451-2200
C:\Users\cmdematto\Desktop\62171_ShagelukAptRd\04 PS&E\04 Plans\Review Plan Set\S-05.01-S-05.01 Fri, May/22/20 11:14am

STATE	PROJECT DESIGNATION	YEAR	SHEET NO.	TOTAL SHEETS
ALASKA	0002163 / Z621710000	2020	V9	V9

S-30.04

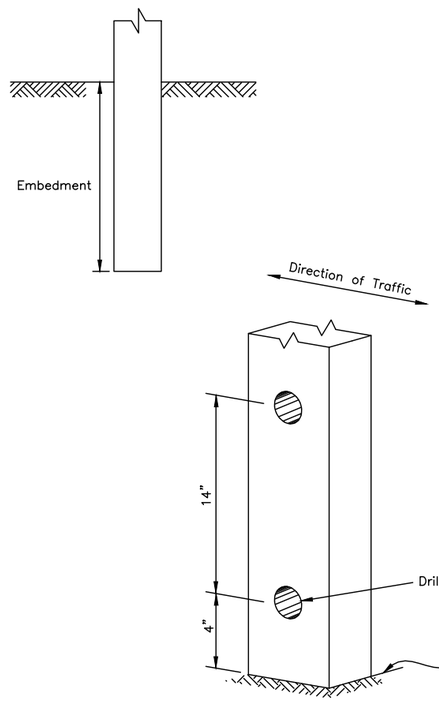

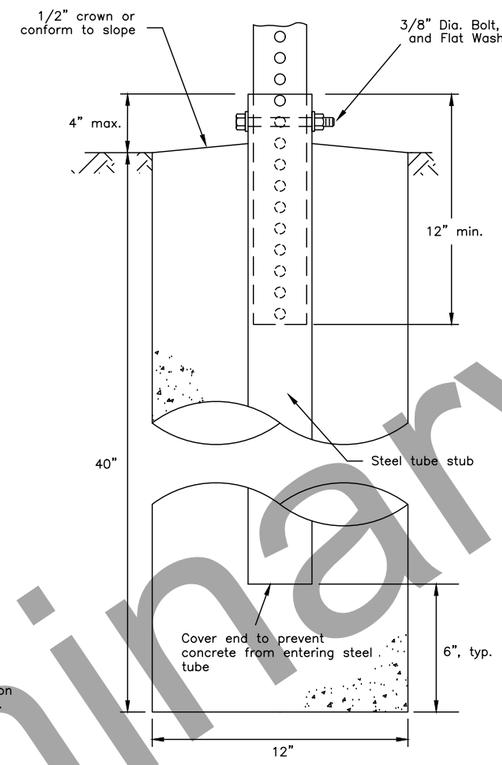

SLEEVE TYPE
CONCRETE FOUNDATION

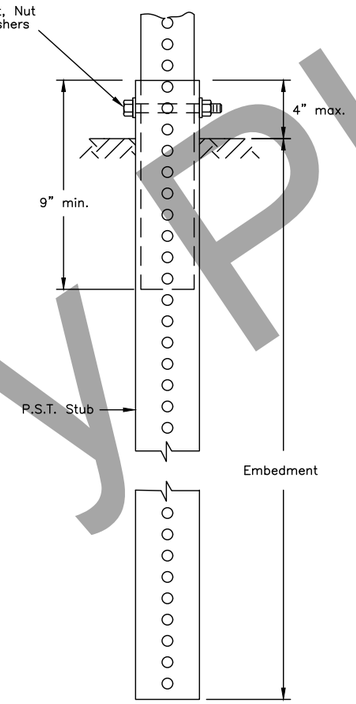

SLEEVE TYPE ✱
SOIL EMBEDMENT

WOOD SIGN POSTS			
SIZE	HOLE DIA.	EMBEDMENT*	NO. OF POSTS WITHIN 7 Ft. PATH
4"x4"	NONE	36"	2
4"x6"	1 1/2"	36"	2
6"x6"	1 1/2"	40"	1
6"x8"	3"	48"	1

✱ Embedment depth applies in both strong and weak soil.

WOOD POSTS

PERFORATED STEEL TUBES (P.S.T.)		
POST SIZE	Embedment Depth	No. of P.S.T.s permitted within 7 ft path
1 1/2" x 1 1/2"	3'-0"	2
1 3/4" x 1 3/4"	3'-0"	2
2" x 2"	3'-6"	2
2 1/4" x 2 1/4"	4'-0"	1
2 1/2" x 2 1/2"	4'-6"	1

✱ Use 3"x3"x3/16" Stub for 2 1/2"x2 1/2" PST Applications.

PERFORATED STEEL TUBE (PST) POSTS

GENERAL NOTES:

1. Refer to Std Dwg S-00 for sign framing details.
2. See plans for type of post, size and embedment type.
3. To maintain crashworthiness, install no more than the number of P.S.T.s or wood posts specified in the tables within 7' of each other.
4. Do not install wood posts larger than 6"x8".
5. Do not use the supports on this drawing for multiple support signs if supports are separated by more than 7 feet.
6. Treat all field cuts and field drilled holes in wood posts in accordance with Section 730-2.04 of the Standard Specifications.

REVISIONS		
Date	Description	By
4/2/01	Revised PST table Added Note 3	KJS
2/12/02	Revised wood posts	KJS
1/16/17	Rev. note 1, et. al.	LRG

State of Alaska DOT&PF

LIGHT SIGN STRUCTURE
POST EMBEDMENT

S-30.04

S-30.04

Preliminary Plans

PLANS DEVELOPED BY: STATE OF ALASKA DEPARTMENT OF TRANSPORTATION & PUBLIC FACILITIES, NORTHERN REGION, 2301 PEGER ROAD, FAIRBANKS, AK 99709 (907)451-2200
C:\Users\cmdamattio\Desktop\62171_ShagelukAptRd\04 PS&E\04 Plans\Review Plan Set\S-30.04-S-30.04 Fri, May/22/20 11:14am 1:14cm